ARMY TM 9-2330-275-14&P
AIR FORCE TO 36A4-24-1

Operating Instructions 2-1

Operator/Crew Preventive Maintenance Checks end Services (PMCS) 2-3

Lubrication Instructions 3-1

Operator/Crew Troubleshooting 3-5

Unit Preventive Maintenance Checks and Services (PMCS) 4-3

Unit Troubleshooting 4-6

Maintenance Allocation Chart (MAC) B-1

Repair Parts and Special Tools List (RPSTL) F-1

TECHNICAL MANUAL

OPERATOR'S, UNIT, DIRECT SUPPORT, AND GENERAL SUPPORT MAINTENANCE MANUAL (INCLUDING REPAIR PARTS AND SPECIAL TOOLS LIST)

FOR

DOLLY SET, LIFT, TRANSPORTABLE SHELTER: M689 (NSN 2330-00-226-6076) EIC: CPC

DOLLY SET, LIFT, TRANSPORTABLE SHELTER: M832 (NSN 2330-00-221 -4939) EIC: CPB

DOLLY SET, LIFT, TRANSPORTABLE SHELTER: M840 (NSN 2330-00-937-1175) EIC: CMF

This manual supersedes TM 9-2330-275-14&P, dated 10 June 1980

Approved for public release; distribution is unlimited.

HEADQUARTERS DEPARTMENT OF THE ARMY AND THE AIR FORCE

MARCH 1994

FOR INFORMATION ON FIRST AID, REFER TO FM 21-11.

WARNING

AIR RESERVOIR DRAINCOCK

Wear protective eye goggles when opening air reservoir draincock and avoid air stream. Failure to follow this warning may result in injury to personnel.

WARNING

ASBESTOS

DO NOT handle brakeshoes, brakedrums, or other brake components unless area has been properly cleaned. There may be asbestos dust on the components, which can be dangerous if you touch it or breathe it. Wear an approved filter mask and gloves. Never use compressed air or a dry brush to clean brake components. Dust may be removed using an industrial-type vacuum cleaner. Clean dust or mud away from brake components with water and a wet, soft brush or cloth. Failure to follow this warning may result in serious illness or death to personnel.

WARNING

BRAKESHOE LININGS

Wipe excess lubricant from the area of brakeshoe linings to avoid grease soaking the linings. if brakeshoe linings become soaked, replace them. Failure to follow this warning may cause brakes to malfunction, resulting in serious injury or death to personnel.

WARNING

COMPRESSED AIR

Compressed air used for cleaning or drying purposes, or for clearing restrictions, should never exceed 30 psi (207 kPa). Wear protective clothing (goggles/shield, gloves, etc.) and use caution to avoid injury to personnel.

WARNING

COUPLING AND UNCOUPLING DOLLY SET

All personnel must stand clear of towing vehicle and dolly set during coupling and uncoupling operations. Failure to follow this warning may result in serious Injury or death to personnel.

WARNING

DRAWBAR

When raising drawbar to a vertical position, exercise cars and control. Failure to do so may result In damage to shelter or injury to personnel.

Drawbar is heavy (120 pounds). Use two persons to lift and lower drawbar. Failure to follow this warning may result in damage to shelter or injury to personnel.

WARNING

DRAWBAR AND POSITIONING LEVER

When removing dolly set from shelter, apply downward pressure to drawbar and positioning lever as bolts are removed. Failure to do so will allow dolly to drop to the ground, resulting in possible injury to personnel.

WARNING

DRY CLEANING SOLVENT

Dry cleaning solvent, P-D-68O, is toxic and flammable. Always wear protective goggles and gloves, and use only In a well-ventilated area. Avoid contact with skin, eyes, and clothes, and DO NOT breathe vapors, DO NOT use near open flame or excessive heat. The solvent's flashpoint is 100°F-138°F (38°C-59°C). If you become dizzy while using cleaning solvent immediately get fresh air and medical help. If solvent contacts your eyes, immediately wash them and get medical aid.

WARNING

ELECTRICAL SYSTEM

When troubleshooting an electrical malfunction or performing electrical maintenance, ALWAYS disconnect intervehicular cable from towing vehicle. Failure to do so may result in injury or death due to electric shock.

WARNING

HUB AND BRAKEDRUM

A hot brake can cause serious burns. Use extreme caution before touching brakedrum after road test. Slowly move hand toward brakedrum. If brakedrum is overheated, radiated heat will be felt before actually touching brakedrum.

WARNING

HYDRAULIC SYSTEM

Hydraulic fluid pressure is extremely high when adjusting hydraulic pump. All safety precautions must be taken when performing this operation. Wear protective clothing and use hand and eye protection. Failure to follow this warning may result In injury or death to personnel.

WARNING

SEALING COMPOUND

Sealing compound can burn easily, can give off harmful vapors, and is harmful to skin and clothing. To avoid injury or death, keep sealing compound away from open fire and use in a well-ventilated area. If sealing compound gets on skin or clothing, wash immediately with soap and water.

WARNING

SECURING DOLLY SET

When dolly set is not coupled to towing vehicle, make sure that handbrakes are applied and wheels are securely chocked. Failure to do so may allow dolly set to roll, resulting in injury to personnel or damage to equipment.

ARMY TM 9-2330-275-14&P
AIR FORCE TO 36A4-24-1
HEADQUARTERS
DEPARTMENT OF THE ARMY
AND THE AIR FORCE'
Washington D. C., 15 March 1994

TECHNICAL MANUAL

NO. 9-2330-275-14&P

OPERATOR'S, UNIT, DIRECT SUPPORT, AND GENERAL SUPPORT MAINTENANCE MANUAL (INCLUDING REPAIR PARTS AND SPECIAL TOOLS LIST)

FOR

DOLLY SET, LIFT, TRANSPORTABLE SHELTER: M689 (NSN 2330-00-226-6076) EIC: CPC
DOLLY SET, LIFT, TRANSPORTABLE SHELTER: M832 (NSN 2330-00-221-4939) EIC: CPB
DOLLY SET, LIFT, TRANSPORTABLE SHELTER: M840 (NSN 2330-00-937-1175) EIC: CMF

Current as of 25 March 1994

REPORTING ERRORS AND RECOMMENDING IMPROVEMENTS

You can help improve this manual. If you find any mistakes or if you know of a way to improve the procedures, please let us know. Mail your letter, DA Form 2028 (Recommended Changes to Publications and Blank Forms), or DA Form 2028-2, located in the back of this manual, direct to: Commander, U.S. Army Tank-Automotive Command, ATTN: AMSTA-MB, Warren, MI 48397-5000. A reply will be furnished to you.

TABLE OF CONTENTS

CHAPTER 1 INTRODUCTION — Page

Section I. General Information 1-1
Section II. Equipment Description 1-2

CHAPTER 2 OPE`RATING INSTRUCTIONS

Section I. Description and Use of Operator's Controls and Indicators 2-1
Section II. Operator/Crew Preventive Maintenance Checks and Services (PMCS). 2-3

Approved for public release: distribution is unlimited.

*This manual supersedes TM 9-2330-275-14&P, dated 10 June 1980

TABLE OF CONTENTS (Con't)

Page

Section III. Operation Under Usual Conditions 2-8
Section IV. Operation Under Unusual Conditions 2-55

CHAPTER 3 OPERATOR MAINTENANCE

Section I. Lubrication Instructions 3-1
Section II. Operator/Crew Troubleshooting 3-5
Section III. Operator/Crew Maintenance Procedures 3-21

CHAPTER 4 UNIT MAINTENANCE

Section I. Repair Parts; Special Tools; Test, Measurement, and Diagnostic Equipment (TMDE); and Support Equipment 4-1
Section II. Service upon Receipt 4-2
Section III. Unit Preventive Maintenance Checks and Services (PMCS) 4-3
Section IV. Unit Troubleshooting Procedures 4-7
Section V. General Maintenance Instructions 4-36
Section VI. Electrical System Maintenance 4-39
Section V1I. Front Axle Maintenance 4-60
Section VIII. Rear Axle Maintenance 4-76
Section IX. Brake System Maintenance 4-82
Section X. Wheels, Hubs, and Brakedrums Maintenance 4-120
Section XI. Frame and Towing Attachments Maintenance 4-126
Section XII. Springs and Shock Absorbers Maintenance 4-155
Section XIII. Accessory Items Maintenance 4-191
Section XIV. Hydraulic and Fluid Systems Maintenance 4-196
Section XV. Preparation for Storage or Shipment 4-243

CHAPTER 5 DIRECT SUPPORT AND GENERAL SUPPORT MAINTENANCE

Section 1. Wheels and Brakedrums Maintenance 5-1

APPENDIX A REFERENCES A-1

APPENDIX B MAINTENANCE ALLOCATION CHART

Section 1. Introduction B-1
Section II. Maintenance Allocation Chart B-3

TABLE OF CONTENTS (Con't)

		Illus Fig	Page
APPENDIX C COMPONENTS OF END ITEM AND BASIC ISSUE ITEMS LIST			
Section I.	Introduction		C-1
Section II.	Components of End hem		C-2
Section III.	**Basic Issue Items**		C-2
APPENDIX D ADDITIONAL AUTHORIZATION LIST			D-1
APPENDIX E EXPENDABLE/DURABLE SUPPLIES AND MATERIALS LIST			E-1
APPENDIX F REPAIR PARTS AND SPECIAL TOOLS LIST			
Section I.	Introduction		F-1
Section II.	**Repair Parts List**		F-1
GROUP 06	**ELECTRICAL SYSTEM**		
0608 -	MISCELLANEOUS ITEMS		1-1
	DISTRIBUTION BOX, FRONT (M689, M840)	1	1-1
	DISTRIBUTION BOX, REAR (M689, M840)	2	2-1
	DISTRIBUTION BOX, REAR (M832)	3	3-1
0609 -	LIGHTS		4-1
	STOPLIGHT-TAILLIGHT ASSEMBLY (M689, MS40)	4	4-1
	COMPOSITE STOPLIGHT-TAILLIGHT (M832, MS40)	5	5-1
GROUP 10	**FRONT AXLE**		
1000 -	FRONT AXLE ASSEMBLY		6-1
	FRONT AXLE ASSEMBLY (M832)	6	6-1
1004 -	STEERING AND LEANING WHEEL MECHANISM		7-1
	STEERING KNUCKLE (M689)	7	7-1
	STEERING KNUCKLE (M832, M840)	8	8-1
GROUP 11	**REAR AXLE**		
1100 -	REAR AXLE ASSEMBLY		9-1
	REAR AXLE ASSEMBLY (M689)	9	9-1
	REAR AXLE ASSEMBLY (M840)	10	10-1
	REAR AXLE ASSEMBLY (M832)	11	11-1
GROUP 12	**BRAKES**		
1201 -	HANDBRAKES		12-1
	HANDBRAKES	12	12-1
1202 -	SERVICE BRAKES		13-1
	SERVICE BRAKES	13	13-1
1204 -	**HYDRAULIC BRAKE SYSTEM**		14-1
	WHEEL CYLINDER	14	14-1
	POWER CLUSTER	15	15-1

TABLE OF CONTENTS (Con't)

		Illus Fig	Page
	MASTER CYLINDER ASSEMBLY	16	16-1
	HYDRAULIC LINES AND FITTINGS (M689, M840)	17	17-1
	HYDRAULIC LINES AND FITTINGS (M832)	18	18-1
1208-	AIRBRAKE SYSTEM		19-1
	BRAKE AIR CYLINDER	19	18-1
	AIR LINES AND FITTINGS (M689, M840)	20	20-1
	AIR LINES AND FTITINGS (M832)	21	21-1
GROUP 13	WHEELS AND TRACKS		
1311 -	WHEEL ASSEMBLY		22-1
	HUB ASSEMBLY AND DRUM	22	22-1
1313-	TIRES, TUBES, TIRE CHAINS		23-1
	TIRE AND TUBE	23	23-1
GROUP 15	FRAME, TOWING ATTACHMENTS, DRAWBARS, AND ARTICULATION SYSTEMS		
1501 -	FRAME ASSEMBLY		24-1
	TRANSPORTER CLAMP AND BLOCK (M689, M832)	24	24-1
	BINDER ASSEMBLY (M840)	25	25-1
	PLATFORM ASSEMBLY (M832)	26	26-1
	PLATFORM ASSEMBLY (M840)	27	27-1
1503 -	PINTLES AND TOWING ATTACHMENTS		26-1
	DRAWBAR	28	28-1
	POSITIONING LEVER (W)	29	29-1
	POSITIONING LEVER (M832)	30	30-1
1507 -	LANDING GEAR, LEVELING JACKS		31-1
	LIFTING-LEVELING JACK ASSEMBLY (M689)	31	31-1
	LIFTING-LEVELING JACK ASSEMBLY (M832, Mm)	32	32-1
GROUP 16	SPRINGS AND SHOCK ABSORBERS		
1601 -	SPRINGS		33-1
	AIR SPRING ASSEMBLY	33	33-1
1804 -	SHOCK ABSORBER EQUIPMENT		34-1
	SHOCK ABSORBER	34	34-1
1605 -	TORQUE, RADIUS, AND STABILIZER RODS		35-1
	REAR SUSPENSION BAR AND RELATED PARTS (M689, M840)	35	35-1
	REAR Suspension BAR AND RELATED PARTS (M832)	36	36-1
	FRONT SUSPENSION BAR AND RELATED PARTS (M689, M840)	37	37-1
	FRONT SUSPENSION BAR AND RELATED PARTS (M832)	38	38-1
GROUP 22	BODY, CHASSIS, AND HULL ACCESSORY ITEMS		
2202-	ACCESSORY ITEMS		39-1
	REFECTORY	39	39-1
2210 -	DATA PLATES AND INSTRUCTION HOLDERS		40-1
	DATA PLATES AND INSTRUCTION PLATES	40	40-1

TABLE OF CONTENTS (Con't)

		Illus Fig	Page
GROUP 24	HYDRAULIC AND FLUID SYSTEMS		
2401 -	PUMP AND MOTOR		41-1
	HYDRAULIC PUMP (M840)	41	41-1
	HYDRAULIC PUMP (M832)	42	42-1
2406 -	STRAINERS, FILTERS, LINES, AND FITTINGS, ETC.		43-1
	HYDRAULIC SYSTEM COMPONENTS (M840)	43	43-1
	HYDRAULIC SYSTEM COMPONENTS	44	44-1
	FRONT PUMP, M832 EXCEPT SN J089-001 THRU 159 AND J017-160 THRU 350	44	44-1 (sheet 1 of 3)
	REAR PUMP, M832 EXCEPT SN J089-001 THRU 159 AND J017-160 THRU 350	44	44-1 (sheet 2 of 3)
	IMPROVED PUMP, M832 SN J089-001 THRU 159 AND J017-160 THRU 350 ONLY	44	44-1 (Sheet 3 of 3)
GROUP 94	REPAIR KITS		
9401 -	REPAIR KITS		KITS-1
	REPAIR KITS	KITS	KITS-1
GROUP 95	GENERAL USE STANDARDIZED PARTS		
9501 -	BULK MATERIAL		BULK-1
	BULK	BULK	BULK-1
Section III.	Special Tools	45	45-1
Section IV.	Cross-reference Indexes		
	NATIONAL STOCK NUMBER INDEX		I-1
	PART NUMBER INDEX		I-9
	FIGURE AND ITEM NUMBER INDEX		I-27

APPENDIX G ILLUSTRATED LIST OF MANUFACTURED ITEMS

Section I.	Introduction	G-1
Section II.	Manufacturing Instructions	G-3

APPENDIX H TORQUE VALUES FOR THREADED FASTENERS H-1

APPENDIX I WEAR LIMITS I-1

INDEX ..... Index 1

CHAPTER 1
INTRODUCTION

Section I. GENERAL INFORMATION

Paragraph Title	Page Number
Destruction of Army Material to Prevent Enemy Use	1-1
Maintenance Forms, Records, and Reports	1-1
Preparation for Storage or Shipment	1-1
Reporting Equipment Improvement Recommendations (EIRs)	1-1
Scope	1-1

1-1. SCOPE.

a. Type of Manual. Operator's, Organizational, Direct Support, and General Support Maintenance Manual (Including Repair Parts and Special Tools List).

b. Equipment Name and Model Numbers. Dolly Set, Lift, Transportable Shelter, M689, M832, and M840.

c. Purpose of Equipment. Used to carry a shelter with maximum weight of 9500-10,500 lb (431 3-4767 kg).

1-2. MAINTENANCE FORMS, RECORDS, AND REPORTS.

Department of the Army forms and procedures used for equipment maintenance will be those prescribed by DA Pam 738-750, The *Army Maintenance Management System (TAMMS).*

1-3. DESTRUCTION OF ARMY MATERIEL TO PREVENT ENEMY USE.

For destruction of Army materiel to prevent enemy use, refer to TM 750-244-6.

1-4. PREPARATION FOR STORAGE OR SHIPMENT.

For information on preparing the dolly set for storage or shipment, refer to Chapter 4, Section XV.

1-5. REPORTING EQUIPMENT IMPROVEMENT RECOMMENDATIONS (EIRs).

If your dolly set needs improvement, let us know. Send us an EIR. You, the user, are the only one who can tell us what you don't like about your equipment. Let us know why you don't like the design or performance. Put it on an SF Form 368 (Product Quality Deficiency Report). Mail it to us at: Commander, U.S. Army Tank-Automotive Command, ATTN: AMSTA-MP, Warren, MI 48397-5000. We'll send you a reply.

Section II. EQUIPMENT DESCRIPTION

Paragraph Title	Page Number
Differences Between Models	1-12
Equipment Characteristics, Capabilities, and Features	1-2
Equipment Data	1-14
Location and Contents of Data Plates	1-6
Location and Description of Major Components	1-3

1-6. EQUIPMENT CHARACTERISTICS, CAPABILITIES, AND FEATURES.

a. Characteristics.

(1) Consists of front and rear dolly.

(2) Mechanical or hydraulic lifting-leveling jacks (depending on model),

(3) Air spring suspension with automotive-type shock absorbers.

(4) Four wheel air-hydraulic brakes.

(5) Military tires for highway and cross-country travel.

(6) Taillights, stoplights, and blackout lights (24-volt).

(7) Manually operated handbrakes.

(8) Towed by 5-ton cargo truck.

b. Capabilities.

(1) Maximum payload: 9,00010,500 lb (4,086-4,767 kg).

(2) Maximum speed: Highway, 50 mi/h *(80* km/h); Cross-country, 25 mi/h (40 km/h).

c. Features.

(1) Ground clearance: 15-17 in. (38-43 cm).

(2) Angle of departure: 90°.

1-7. LOCATION AND DESCRIPTION OF MAJOR COMPONENTS.

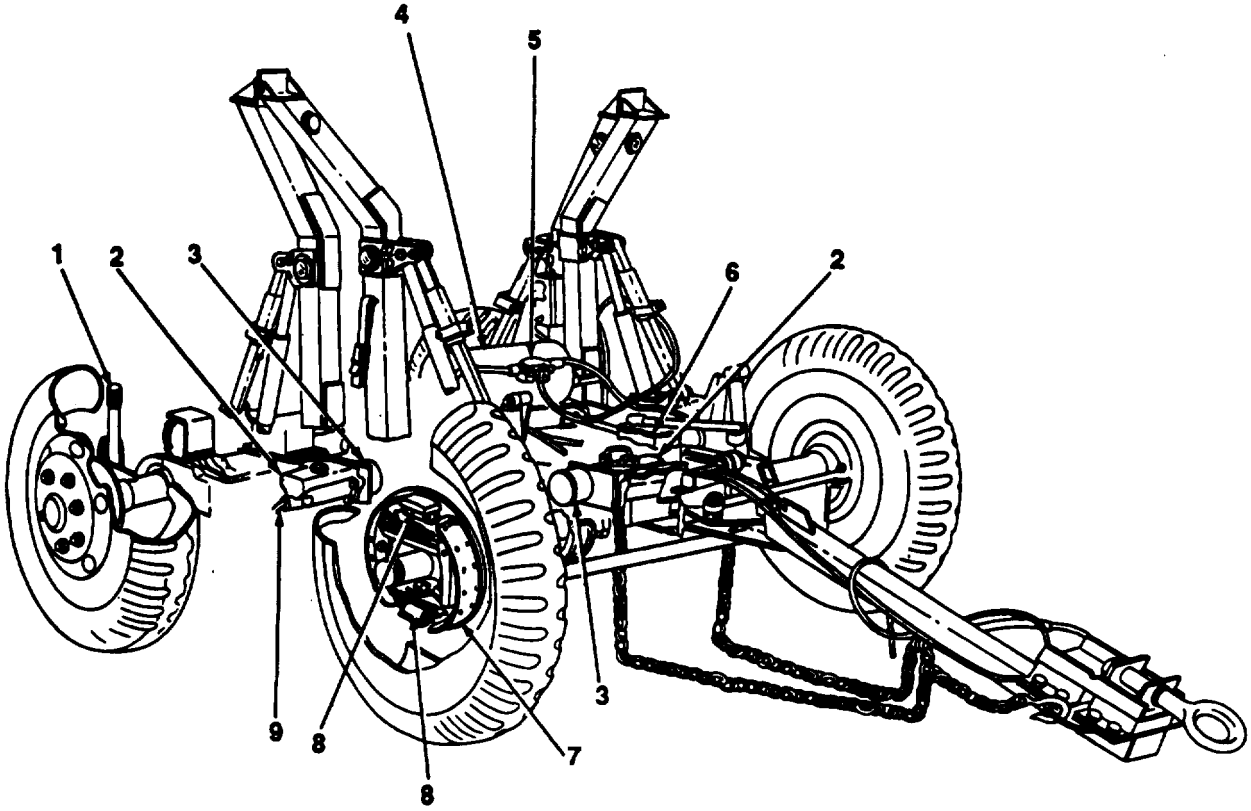

M840

Key	Component	Description
1	Handbrake Lever	Applies mechanical pressure to brakeshoes, preventing movement of dolly set while parked.
2	Master Cylinders	Convert mechanical motion of hydraulic piston to hydraulic pressure in brake lines.
3	Air Cylinders	Apply air pressure to hydraulic piston In master cylinders.
4	Air Reservoir	Furnishes compressed air through relay valve to air cylinder when brakes are applied.
5	Relay Valve	Applies and releases compressed air to air cylinder.
6	Hydraulic Pump (M832 and M840)	Provides hydraulic pressure to raise shelter.
7	Brakeshoe	Applies pressure to brakedrums, slowing and stopping the dolly sat.
8	Wheel Cylinders	Convert hydraulic pressure to mechanical motion, activating brake shoes.
9	Hydraulic Brake Line	Provides hydraulic pressure from master cylinder to wheel cylinders.

1-7. LOCATION AND DESCRIPTION OF MAJOR COMPONENTS (Con't).

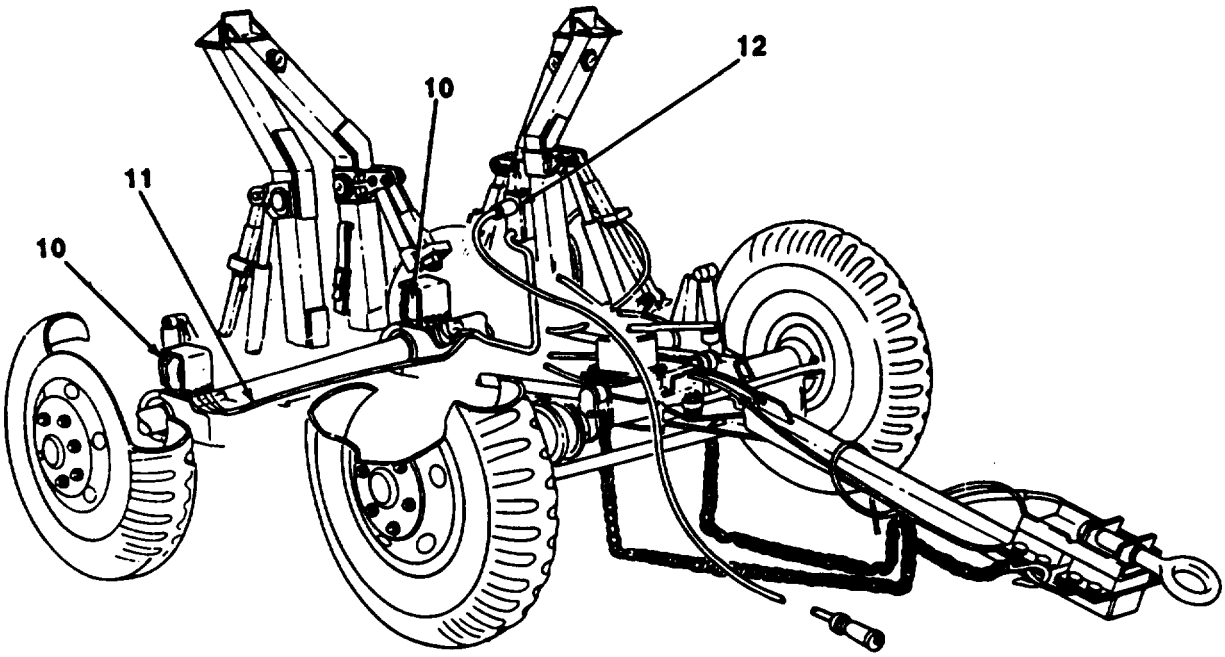

Key	Component	Description
10	Lights	Provide stoplights, tailights, turn signal light, and blackout lights.
11	Branched Wiring Harness	Carries electricall current from distribution box to composite lights.
12	Distribution Box	Provides connecting point for intervehicular cable and branched wiring harness.

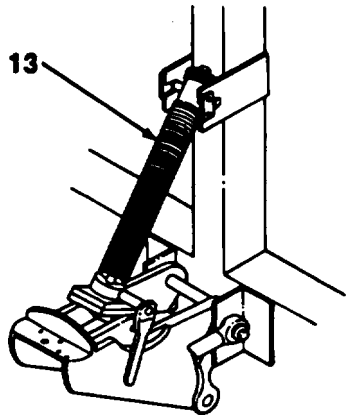

Key	Component	Description
13	Lifting-leveling Jack (M689)	Lifts and supports weight of shelter.

1-7. LOCATION AND DESCRIPTION OF MAJOR COMPONENTS (Con't).

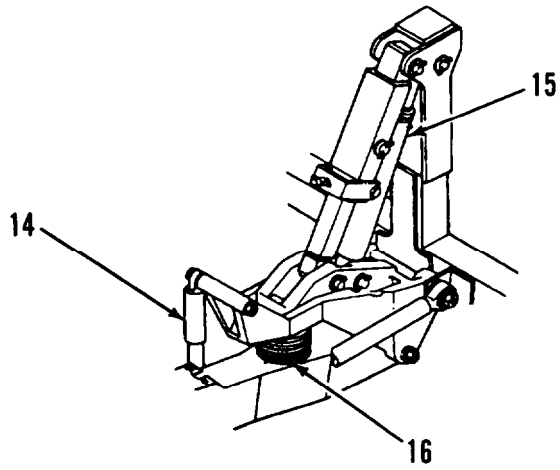

Key	Component	Description
14	shock Absorber	Cushions road shock.
15	Lifting-leveling Jack (M832 and M840)	Lifts and supports weight of shelter.
16	Air Spring	Supports weight of shelter.

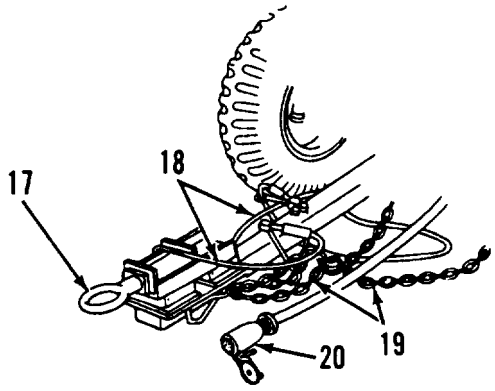

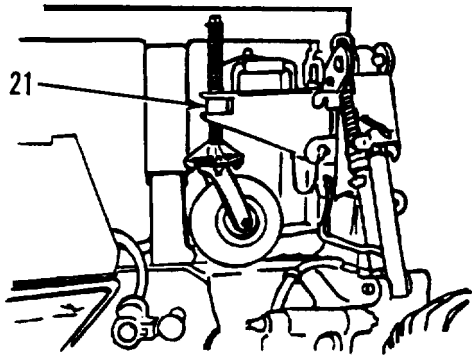

Key	Component	Description
17	Drawbar Coupler	Connects to towing vehicle pintle hook.
18	Air Hoses	Provide connection between towing vehicle and dolly set to operate brakes.
19	Safety Chains	Hook to eyebolts on towing vehicle to prevent dolly set from fully breaking away.
20	Intervehicular Cable	Provides connection between towing vehicle and dolly set electrical system to operate lights.
21	Dolly Casters (M832 SN J089-001 thru 159 and JO1 7-160 thru 350 only)	Help maneuver uncoupled dolly halves into desired position.

1-8. LOCATION AND CONTENTS OF DATA PLATES.

Data plates provide information on the physical characteristics of the dolly set. They also provide helpful information for safe operating procedures. Data plates used on M689, M832, and M840 dolly sets are shown.

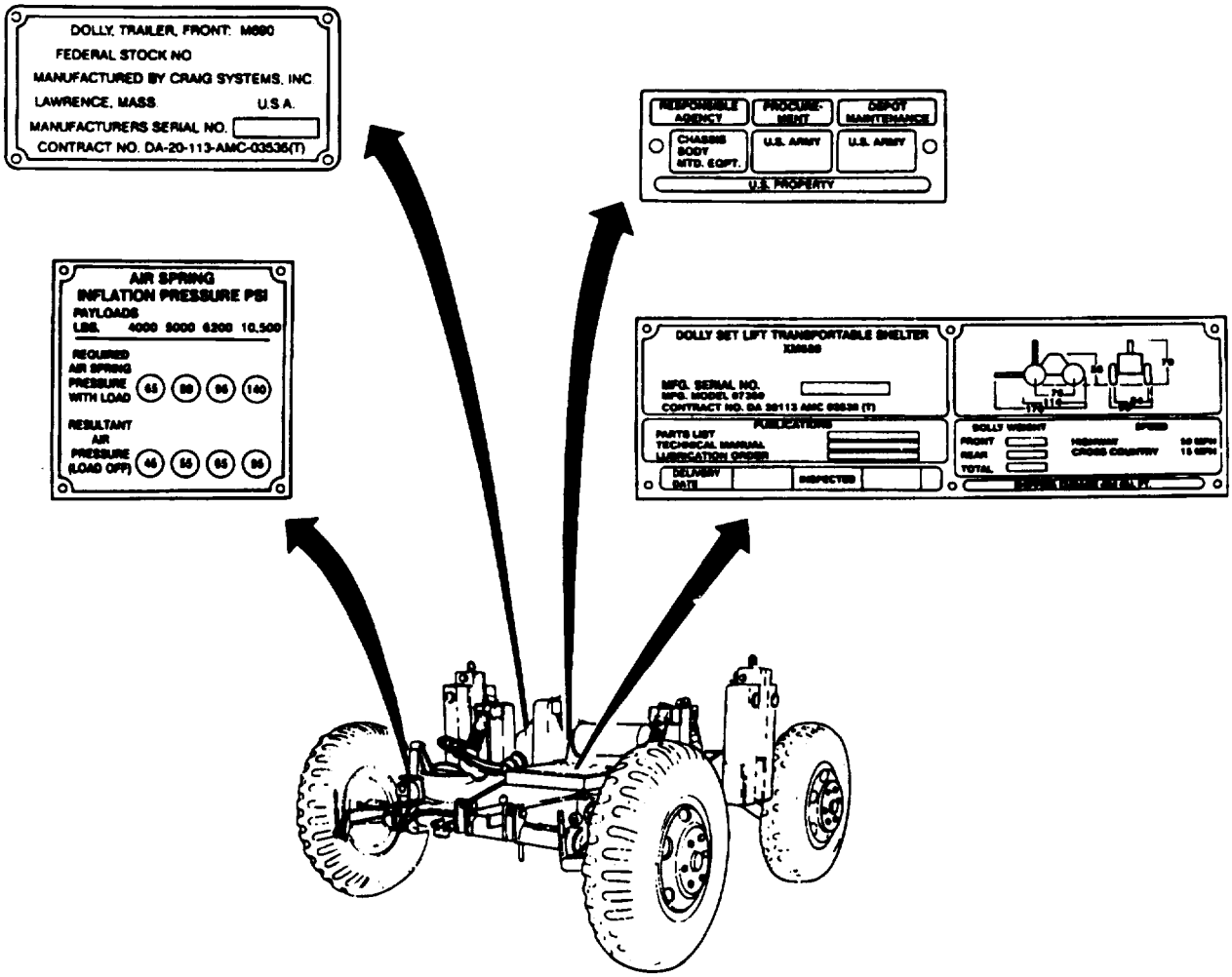

M689

1-8. LOCATION AND CONTENTS OF DATA PLATES (Con't).

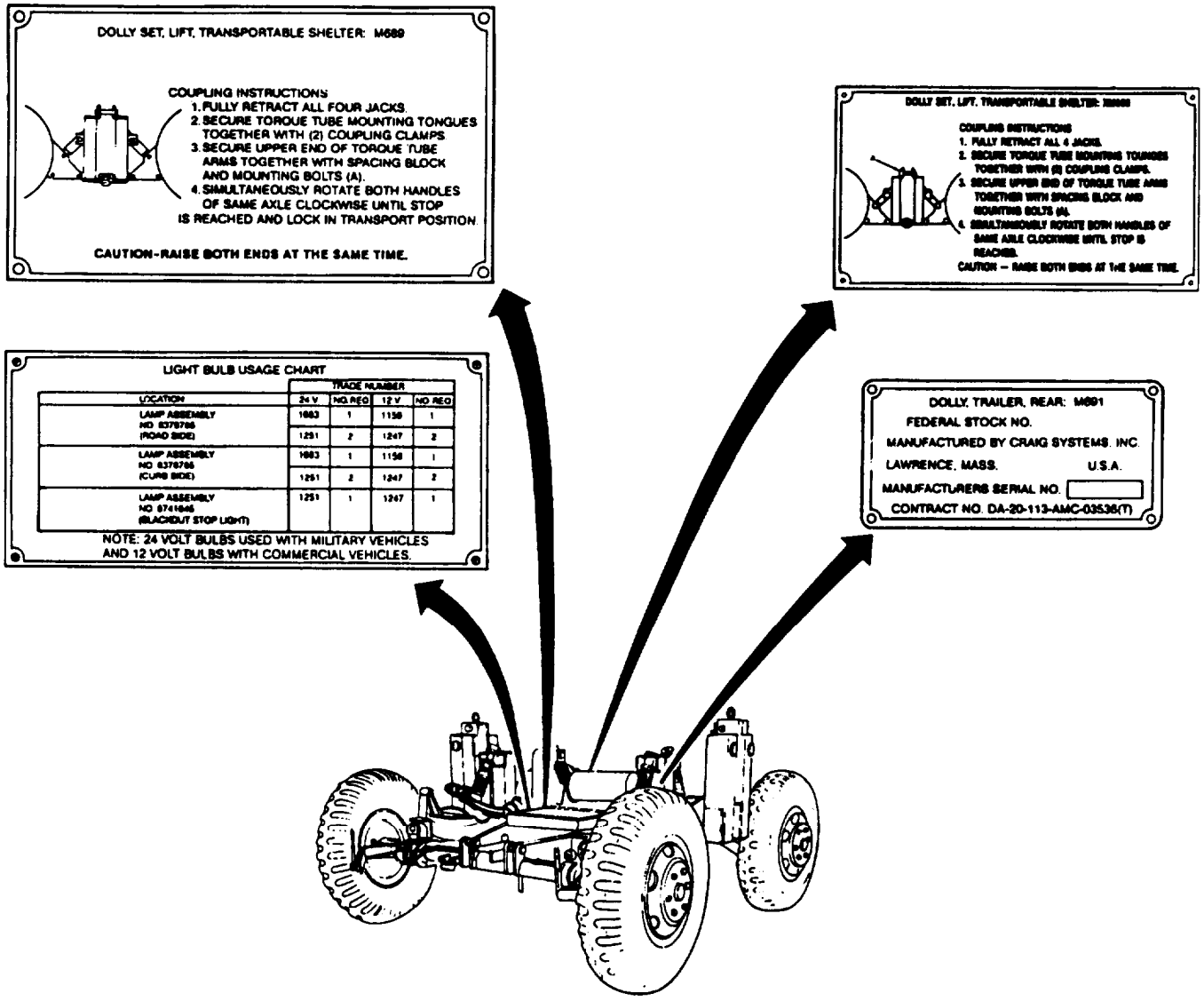

M689

1-8. LOCATION AND CONTENTS OF DATA PLATES (Con't).

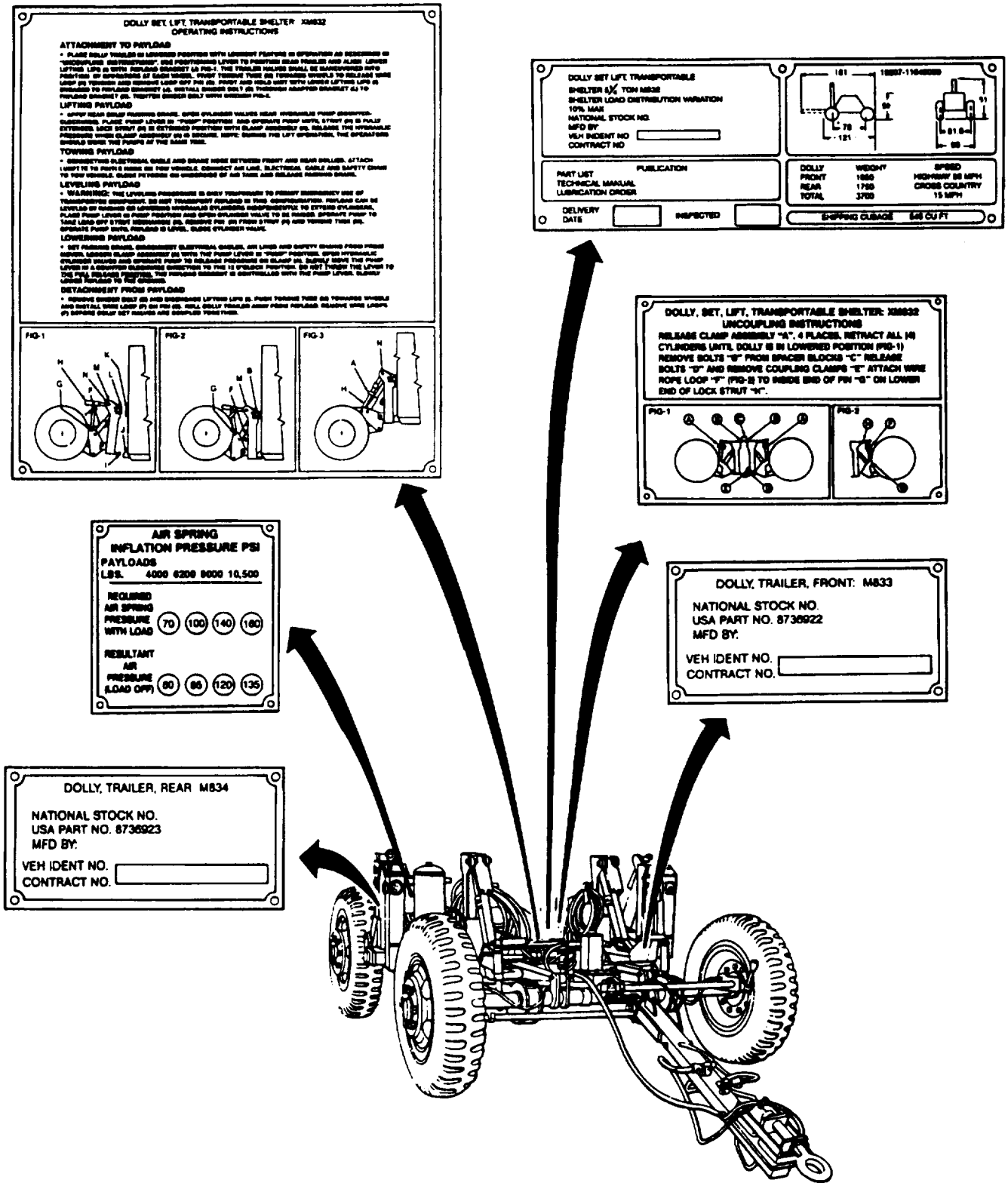

M832 (Except SN J089-001 thru 159 and J017-160 thru 350)

1-8. LOCATION AND CONTENTS OF DATA PLATES (Con't).

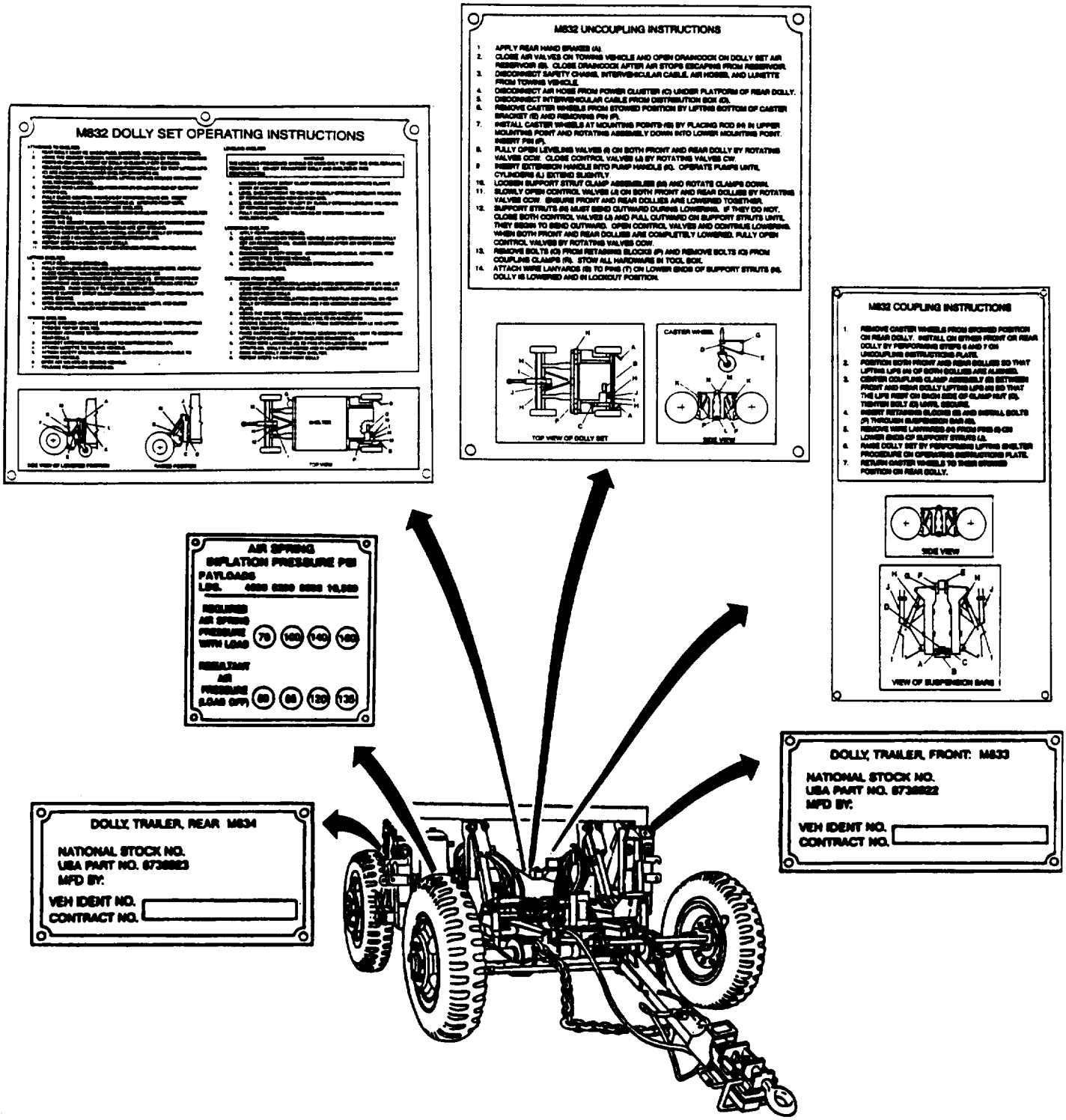

M832 (SN J089-001 thru 159 and J017-160 thru 350 only)
(Sheet 1 Of 2)

1-8. LOCATION AND CONTENTS OF DATA PLATES (Con't).

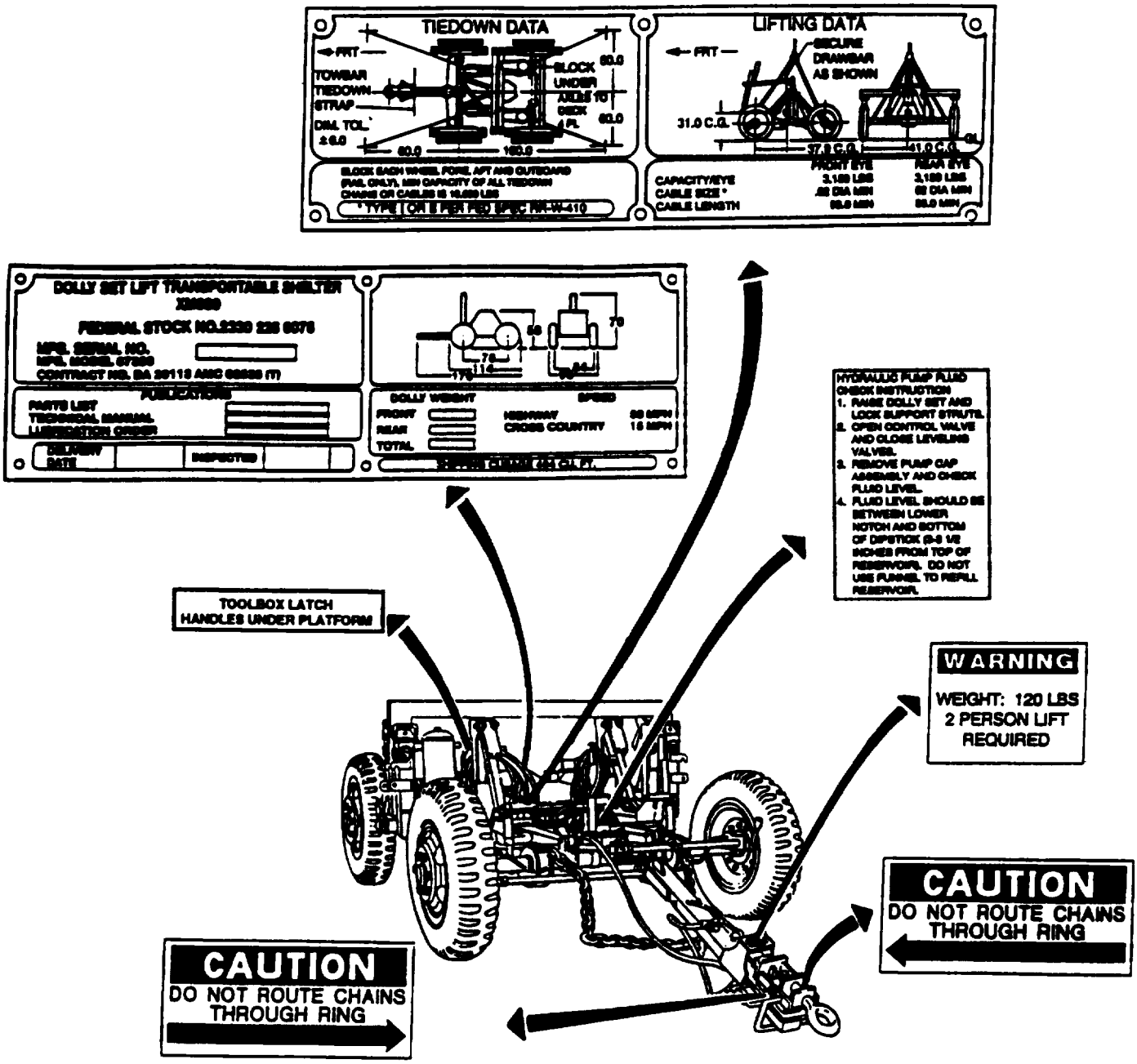

M832 (SN J089-001 thru 159 and J017-160 thru 350 only)
(Sheet 2 of 2)

1-8. LOCATION AND CONTENTS OF DATA PLATES (Con't).

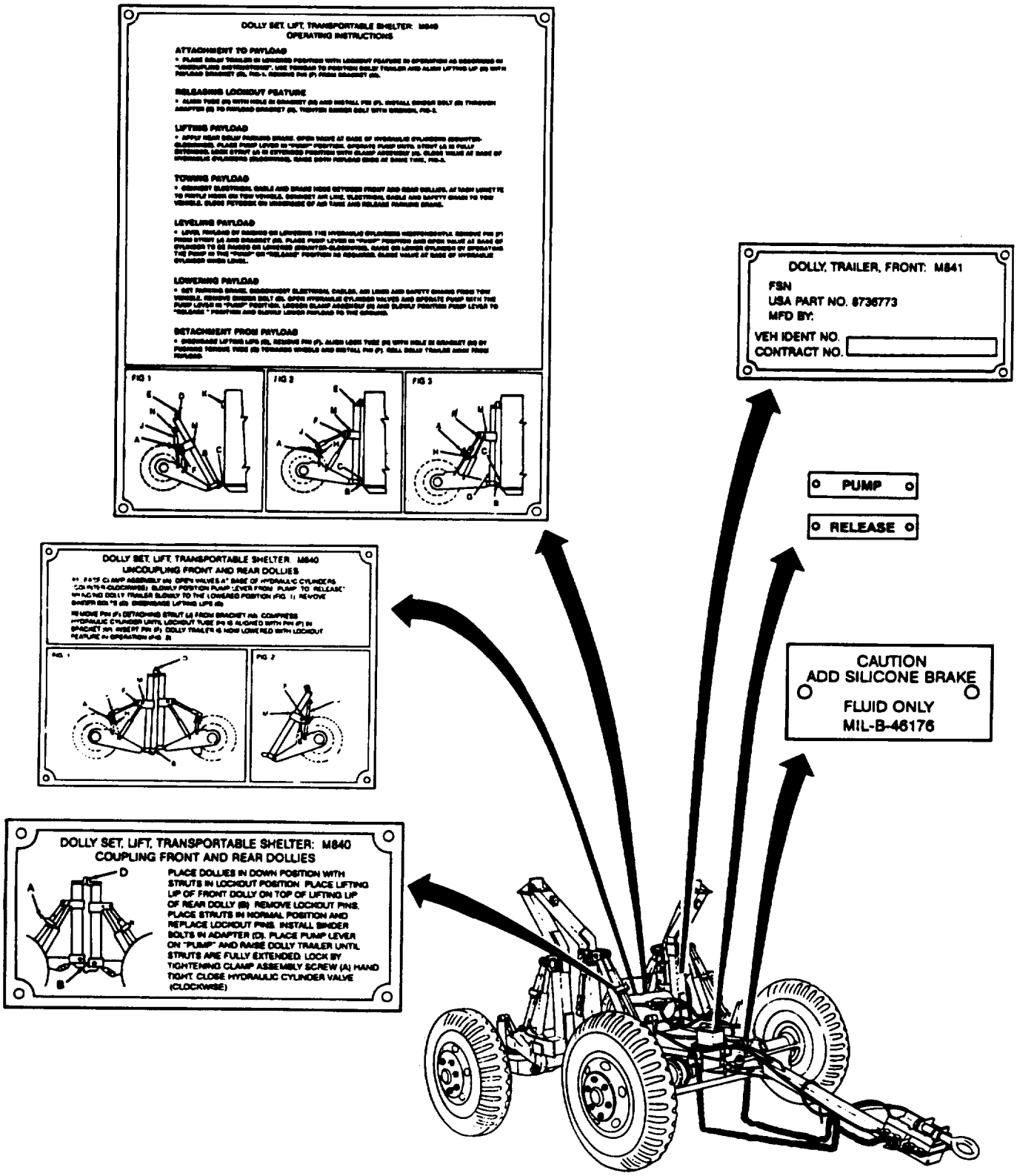

M840

1-8. LOCATION AND CONTENTS OF DATA PLATES (Con't).

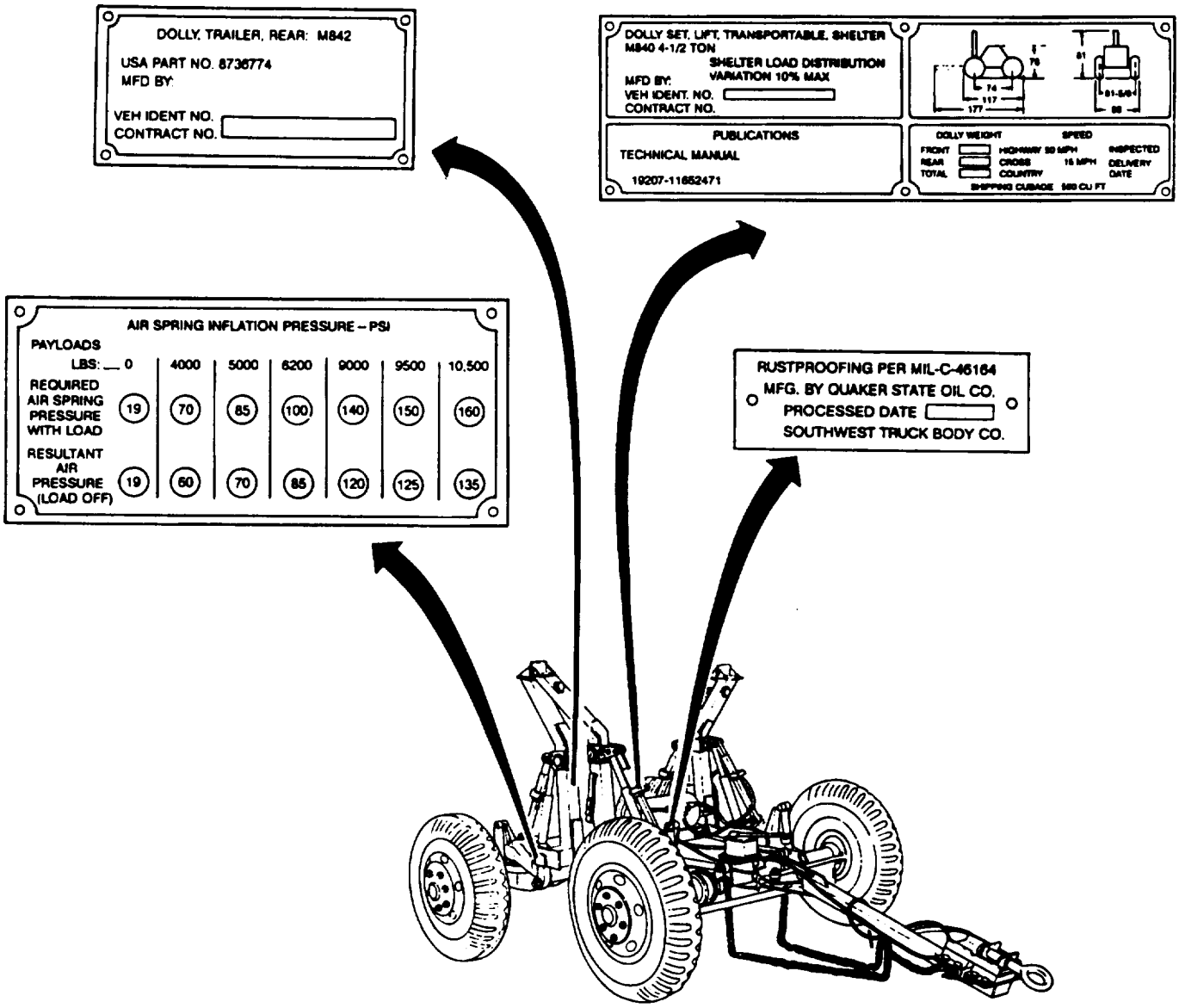

M840

1-9. DIFFERENCES BETWEEN MODELS.

a. M689 utilizes four screw-type manually operated mechanical lifting-leveling jacks for lifting and leveling shelter.

b. M832 and M840 utilize four hydraulic cylinders, manually operated by two hydraulic pumps for lifting and leveling shelter.

c. M689 and M832 have a payload capacity to 10,500 lb (4767 kg).

d. M840 has a payload capacity of 9500 lb (4313 kg).

1-9. DIFFERENCES BETWEEN MODELS (Con't).

e. M689 utilizes a quick-release feature that allows drawbar to be used to position both front and rear dolly to shelter.

f. M832 and M840 utilize a positioning bar to position rear dolly to shelter.

9. The new M832 (SN J089-001 thru 159 and JO1 7-160 thru 350) has several improvements.

(1) Lifting and tiedown provisions have been added.

(2) Two caster assemblies help in maneuvering the uncoupled dolly halves into thedesired position.

(3) The hydraulic system has been improved with an external release valve, an increased system capacity, and boots on the hydraulic cylinders to prevent rust.

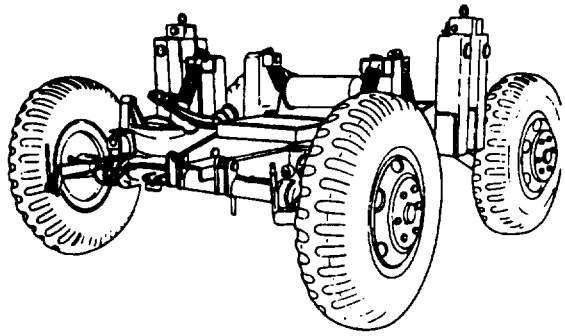

M689

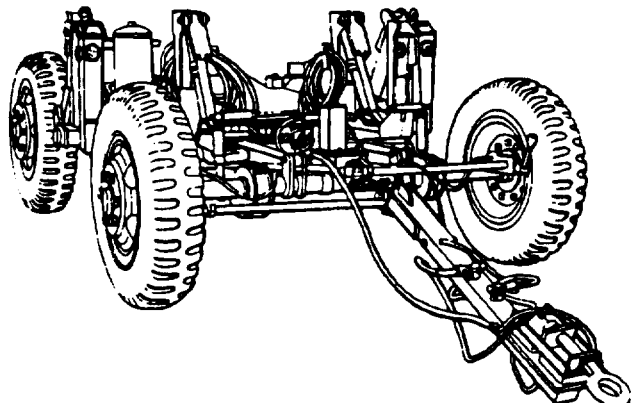

M832 (Except SN J088-001 thru 159 and J017-160 thru 350)

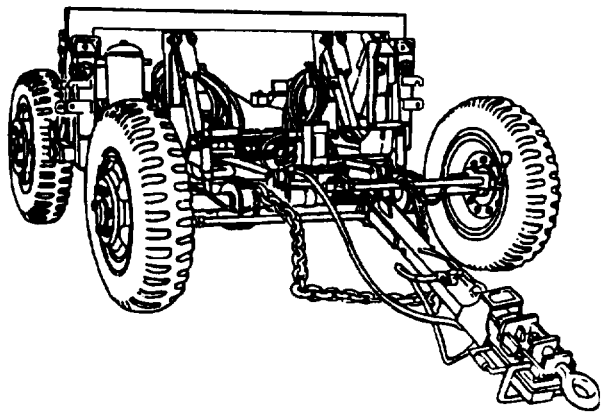

M832 (SN J068-001 thru 159 and J017-160 thru 350 only)

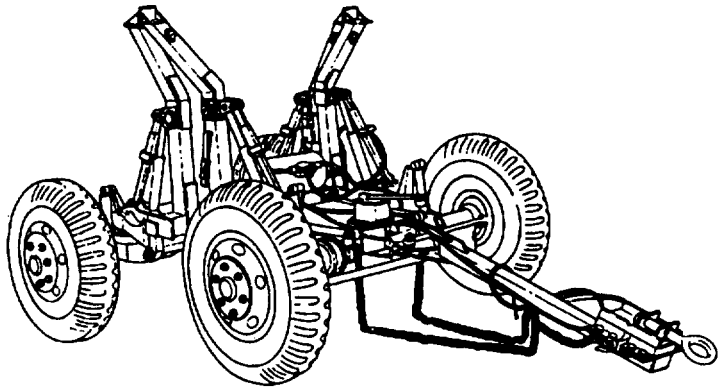

M840

1-10. EQUIPMENT DATA.

Data Common to M689, M832, and M840	
Towing Vehicle	5-ton cargo Truck
Electrical System:	
Required Voltage	24 V dc
Tires	
Type	Standard Military S-02
	9.00 x 20
Tire Pressure:	
Highway	50 psi (345 kPa)
Off-road and Air Transport	25 psi (172 kPa)
Wheels	
Rim Diameter	20 in. (50.80 cm)
Maximum Towed Speed:	
Highway	50 ml/h (60 km/h)
Cross-country	25 mi/h (40 km/h)
Shock Absorbers:	
Rating	1200 lb (544.80 kg)
Type	Direct Action
Brake System:	
Type	Air-over-hydraulic
Shoes	14 In. (35.56 cm) Diameter x 2 1/4 in. (5.72 cm) Wide
Fluid Type	MIL-B-46176
Capacity (Approximate)	1 qt (0.951)

Dolly Set, Lift, Transportable Shelter (M689)	
Weight	
Empty	3500 lb (1589 kg)
Payload	10,500 lb (4767 kg)
Total	14,000 lb (6356 kg)
Dlmensions Overall:	
Ground Clearance	17 in. (43.18 cm)
Height	80.50 In. (153.67 cm) (Drawbar Removed)
width	96 in. (243.84 cm)
Length	118 in. (299.72 cm) (Drawbar Removed)
Angle of Departure	
Lifting-levellng Jacks	
Type	Saw-type, Manually Operated
Lifting Capacity	1O,500(M lb (4767 kg)

1-10. EQUIPMENT DATA (Con't).

Dolly Set Lift, Transportable Shelter (M689) (Con't)

Air Springs:

Type	Four, 7 In. (17.78 cm) Diameter, High-Pressure Air Bags
Maximum Pressure	140 psi (985 kPa)

Payload		Load Off		Load On	
lb	kg	psi	kPa	psi	kPa
4000	1816	45	310	65	448
5000	2270	55	379	60	552
6200	2815	65	448	96	655
10,500	4767	95	655	140	965

Dolly Set, Lift, Transportable. Shelter (M832)

Weight:

Empty	3700 lb (1680 kg)
Payload	10,500 lb (4767 kg)
Total	14,200 lb (6447 kg)

DimensionsOverall:

Ground Clearance	15 in.(38.10 cm)
Height	54.5 in. (138 cm) (Drawbar Removed)
Width	96 in. (243.84 cm)
Length	125.5 in. (318.77 cm) (Drawbar Removed)
Angle of Departure	90°

Lifting-levellng Jacks:

Type	Hydraulic, Manually Operated, Single-acting
Lifting Capacity	10,500 lb at 5000 psi (4767 kg at 34,475 kPa)
Fluid	MIL-H-5606

Temperature Range

Operating	-65°F-160°F (-54°C -71°C)
Storage	-80°F-160°F (-62°C-71°C)

Air Sprlngs:

Type	Four, 7 In. (17.78 cm) Diameter, High-Pressure Air Bags
Maximum Pressure	160 psi (1103 kPa)

1-10. EQUIPMENT DATA (Con't).

Dolly Set, Lift, Transportable Shelter (M832) (Con't)

Air Springs (Con't):

Payload		Load Off		Load On	
lb	kg	psi	kPa	psi	kPa
4000	1816	60	310	70	448
6200	2815	85	448	100	655
9000	4086	120	621	140	896
10500l	4762	135	931	160	1103

Dolly Set, Lift, Transportable Shelter (M840)

Weight

Empty	3500 lb (1589 kg)
Payload	10,500 lb (4313 kg)
Total	14,000 lb (5902 kg)

Dimensions Overall:

Ground Clearance	17 in. (43.18 cm)
Height	81 in. (205.74 cm) (Drawbar Removed)
Width	96 in. (243.84 cm)
Length	118 in. (299.72 cm) (Drawbar Removed)
Angle of Departure	9 0 °

Lifting-levellng Jacks:

Type	Hydraulic, Manually Operated, Locking Strut
Lifting Capacity	9500 lb at 5000 psi (4313 kg at 34,475 kPa)
Fluid	MIL-H-5606

Temperature Range:

Operating	-65°F-160°F (-54°C-71°C)
Storage	-80°F-160°F (-62°C-71°C)

1-10. EQUIPMENT DATA (Con't).

Dolly Set, Lift, Transportable Shelter (M840) (Con't)

Air Springs:

Type ..... Four, 7 in. (17.78 cm) Diameter, High Pressure Air Bags

Maximum Pressure ..... 160 psi (1103 kPa)

Payload		Load Off		Load On	
lb	kg	psi	kPa	psi	kPa
4000	1816	45	414	70	483
5000	2815	85	586	100	690
6200	4086	120	627	140	965
10,500	4767	135	931	160	1103

CHAPTER 2
OPERATING INSTRUCTIONS

Section I. DESCRIPTION AND USE OF OPERATOR'S CONTROLS AND INDICATORS

Paragraph Title	Page Number
Controls and Indicators	2-1
General	2-1

2-1. GENERAL.

This section shows the location and function of the controls and indicators for the M689, M832, and M840 Dolly Sets. Review this section thoroughly before operating the dolly set.

2-2. CONTROLS AND INDICATORS.

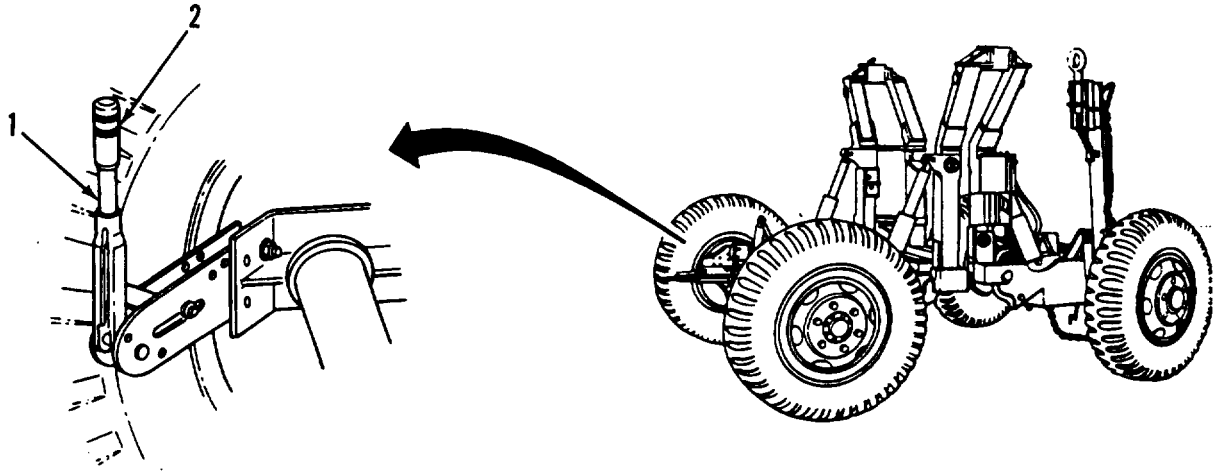

Key	Component	Description
1	Handbrake Lever	Applies handbrake.
2	Adjustment Knob	Adjusts handbrake cable tension.

2-2. CONTROLS AND INDICATORS (Con't).

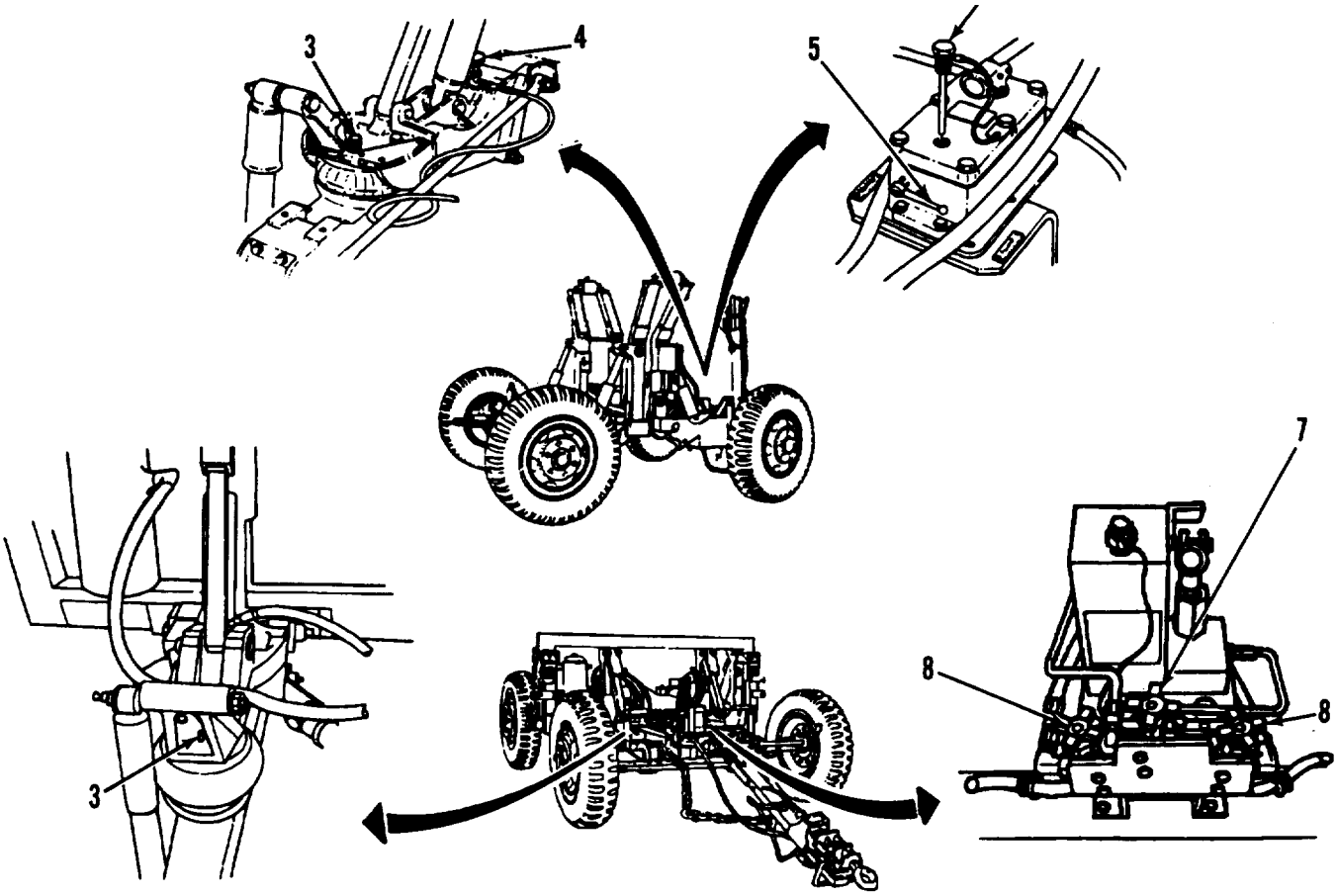

Key	Component	Description
3	Air Springs Valve Stem	Allows air to be added or released from air springs.
4	Lifting-leveling Jack Valve SN J089-001 thru 159 and J017-160 thru 350)	Retains or releases hydraulic fluid from lifting-leveling jack.
5	Release Valve Lever M840 and M832 except SN J089-001 thru 159 and J01 7-160 thru 350)	Two-position lever allows hydraulic pump to switch from pumping to releasing pressure modes.
6	Dipstick (M840)	Indicates level of hydraulic fluid in pump.
7	Control Valve (M832 SN J089-001 thru 159 arid J017-160 thru 350 only)	Retains or releases hydraulic fluid from lifting-leveling jack.
8	Leveling Valve (M832 SN J089-001 thru 159 and J017-160 thru 350 only)	Controls hydraulic pressure.

Section II OPERATOR/CREW PREVENTIVE MAINTENANCE CHECKS AND SERVICES (PMCS)

Paragraph Title	Page Number
General	2-3
General PMCS Procedures	2-3
Leakage Definitions	2-4
Operator/Crew Preventive Maintenance Checks and Services (PMCS), Table 2-1	2-5
Reporting Repairs	2-3
Service Intervals	2-3
Specific PMCS Procedures	2-4

2-3. GENERAL.

a. To ensure that the dolly sets are ready for operation at all times, they must be inspected on a regular basis so that defects may be found before they result in serious damage, equipment failure, or injury to personnel. This Section contains systematic instructions on inspections, adjustments, and corrections to be performed by the operator/ crew.

b. While performing PMCS, read and follow all safety instructions found in the Warning Summary at the front of this manual. Keep in mind all WARNINGS and CAUTIONS.

2-4. SERVICE INTERVALS.

Perform PMCS, found in Table 2-1, at the following intervals:

(1) Perform Before (B) PMCS just before operating the dolly set.

(2) Perform *During* (D) PMCS while operating the dolly set.

(3) Perform After (A) PMCS right after operating the dolly set.

2-5. REPORTING REPAIRS.

All defects while the operator cannot fix must be reported on a DA Form 2404, *Equipment Inspection and Maintenance Worksheet,* immediately after completing PMCS. If a serious problem is found, IMMEDIATELY report it to your supervisor.

2-6. GENERAL PMCS PROCEDURES.

WARNING

Dry cleaning solvent, P-D-680, is toxic and flammable. Always wear protective. goggles and gloves, and use only in a well-ventilated area. Avoid contact with skin, eyes, and clothes, and DO NOT breathe vapors. DO NOT use near open flame or excessive heat. The solvent's flash point is 1OO°F-138°F (38°C-59°C). If you become dizzy while using dry cleaning solvent, immediately get fresh air and medical help. If solvent contacts your eyes, immediately wash them and get medical aid.

a. Keep equipment clean. Dirt, oil, and debris may cover up a serious problem. Clean as you work and as needed. Use dry cleaning solvent (Item 14, Appendix E) on all metal surfaces. Use soap and water on rubber, plastic, and painted surfaces.

b. While performing PMCS, inspect the following components:

(1) Bolts, Nuts, and Screws. Ensure that they are not loose, missing, bent, or broken. Report loose or missing bolts, nuts, and screws to Unit maintenance.

2-6. GENERAL PMCS PROCEDURES (Con't).

(2) Welds. Inspect for gaps where parts are welded together. Check for loose or chipped paint, rust, and cracks. Report bad welds to Unit maintenance.

(3) Electric Conduit, Wires, and Connectors. Inspect for cracked or broken conduit insulation, bare wires, and loose or broken connectors. Report boss connections and faulty wiring to Unit maintenance.

(4) Hoses, Lines, and Fittings. Inspect for wear, damage, and leaks. Ensure that clamps and fittings are tight. Report any damage, leaks, or loose clamps and fittings to Unit maintenance.

c. Check that components are adequately lubricated in accordance with Chapter *3,* Section 1.

2-7. SPECIFIC PMCS PROCEDURES.

a. Operator/Crew PMCS are provided in Table 2-1. Always perform PMCS in order listed. Once PMCS procedures become a habit, anything that is not right can be spotted quickly.

b. Before performing PMCS, read all the checks required for the appicable interval and prepare all the tools needed. Have several clean rags (Item 11, Appendix E) handy. Perform ALL inspections at the applicable interval.

c. If anything wrong is discovered through PMCS, perform the appropriate troubleshooting task in Chapter 3, Section II. If any component or system is not serviceable, or if a given service does not correct the problem, notify your supervisor.

d. The columns in Table 2-1 are defined as follows:

(1) Item No. Provides a logical sequence for PMCS to be performed and is used as a source of item numbers for the "TM ITEM NO." column when recording PMCS results on DA Form 2404.

(2) Internal. Specifies the interval at which PMCS is to be performed.

(3) Item To Be Inspected. List the system and common name of each item that is to be inspected. Included in this column are specific servicing, inspection, replacement, or adjustment procedures to be followed.

NOTE

The terms "ready/available" and "mission-capable" refer to same status: Equipment is on hand and is able to perform its combat missions (AR 700-138).

(4) Equipment is Not Ready/Available if: Explains when the dolly set is not mission-capable.

2-8. LEAKAGE DEFINITIONS.

a. It is important to know how fluid leakage affects the status of the dolly set. Following are type/classes of leakage an operator must know to determine whether the dolly set is mission-capable. Learn these leakage definitions. When in doubt, notify your supervisor.

Leakage Definitions for Operator/Crew PMCS:

Class I	Seepage of fluid (as indicated by wetness or discoloration) not great enough to form drops.
Class II	Leakage of fluid great enough to form drops, but not great enough to cause drops to drip from item being inspected.
Class III	Leakage of fluid great enough to form drops that fall from the item being inspected.

2-8. LEAKAGE DEFINITIONS (Con't).

CAUTION

When operating with Class I or II leaks,continueto check fluid levels in addition to that required in PMCS. Parts without fluid will atop working or may be damaged.

b. Equipment operation is allowed with minor (Class I or II) leakage. Fluid levels in an item/system affected with such leakage must be checked more frequently than required in PMCS. When in doubt, notify your perviso

c. Report Class Ill leaks IMMEDIATELY to your supervisor.

Table 2-1. Operator/Crew Preventive Maintenance Checks and Services (PMCS).

B-BEFORE D-DURING A-AFTER

ITEM NO.	INTERVAL B	INTERVAL D	INTERVAL A	ITEM TO BE INSPECTED PROCEDURE: Check for and have repaired, filled or adjusted as needed.	EQUIPMENT IS NOT READY/AVAILABLE IF:
				NOTE Perform Before (B) PMCS if a: You are the assigned operator but have not operated dolly set since the last After inspection b: You are operating dolly set for the first time.	
1				WALKAROUND CHECKS NOTE Perform the following inspections/checks before coupling the dolly sat to towing vehicle. Make the following walkaround checks:	
	•			a. Check hose connection points and bleed plugs on four lift cylinders for evidence of hydraulic fluid leakage.	Class Ill leakage is found. Notify Unit maintenance.
	•			b. Check front and rear hydraulic valve banks for evidence of hydraulic fluid leakage or missing components.	Class Ill leakage is found. Notify Unit maintenance.
	•			c. Check hydraulic hoses and fittings for evidence of wear, cracks, abrasions, or leakage.	Class Ill leakage is found. Notify Unit maintenance.
	•			d. Visually check for evidence of brake fluid leaking from master cylinder and lines.	Any leakage is found.

Table 2-1. Operator/Crew Preventive Maintenance Checks and Services (PMCS) (Con't).

B-BEFORE D-DURING A-AFTER

ITEM No.	INTERVAL B	INTERVAL D	INTERVAL A	ITEM TO BE INSPECTED PROCEDURE: Check for and have repaired, filled, or adjusted as needed.	EQUIPMENT IS NOT READY/AVAILABLE IF:
	•			e. Visually check tires for cuts, cracks, or penetrating objects. Check for low pressure. Proper pressure is: Cross-country . . . .25 psi (172 kPa) • Highway . . . . . 50 psi (345 kPa)	One or more tires flat or missing or have cuts or abrasions that result in tire failure during operation.
	•			f. For M832 (SN J089-001 thru 159 and J017-160 thru 350 only) check caster tires for cuts, cracks, or penetrating objects. Check for low pressure. Proper pressure for caster tire is 90 psi (619 kPa).	One or more tires fiat or missing or have cuts or abrasions that would result in tire failure during operation.
	•			g. Check for loose or missing lug nuts and other common hardware.	Two or more lug nuts missing.
	•			h. Visually check drawbar components, air connections, and safety chains for damage or missing parts.	Damaged or missing parts. Air coupling preformed packing missing.
	•			i. Check intervehicular cable and all electrical wiring for cuts, breaks, or other damage.	
	•			j. Check air springs for cuts, cracks, and general condition.	Ruptured air spring found.
	•			k. Check for any evidence of tampering, damage, or hose parts since last inspection.	
	•			1. Check resilient mounts for cuts or cracks.	Cuts or cracks are found. Notify Unit maintenance.
	•			m. For M832 (SN J089-001 thru 159 and J017-160 thru 350 only), visually check shock absorbers to verify that cylinder is within proper range. If not, adjust air springs (pars 2-14).	Shock absorber cylinder does not fall within acceptable range.
	•			n. Check toolbox and platform assembly to make sure it is secure. Check butt hinge leaf, quick-release pin, and toolbox latches.	Toolbox and platform assembly is not secure.
2				AIR RESERVOIR	
	•			a. Close draincock. WARNING Wear protective eye goggles when opening air reservoir draincock and avoid air stream. Failure to follow this warning may result in injury to personnel.	Any air leaks found.

Table 2-1. Operator/Crew Preventive Maintenance Checks and Services (PMCS) (Con't).

B-BEFORE D-DURING A-AFTER

ITEM NO.	INTERVAL B	INTERVAL D	INTERVAL A	ITEM TO BE INSPECTED PROCEDURE: Check for and have repaired, filled, or adjusted as needed.	EQUIPMENT IS NOT READY/AVAILABLE IF:
			•	b. Open draincock and leave open.	
				NOTE Couple dolly set to towing vehicle. An assistant will be needed while checking lights and brakes operation.	
3				LIGHTS	
	•			Check for proper operation and overall condition.	Lights do not operate.
4				HANDBRAKES	
	•			With dolly set coupled to towing vehicle, apply handbrakes. Move towing vehicle slightly forward and visually monitor dolly set wheels for rotation. Adjust handbrakes if necessary (pare 3-5).	
5				SERVICE BRAKES	
		•		a. Check brakes for any unusual conditions (grabbing, pulling, or slow operation).	
				WARNING A hot brake can cause serious bums. Use extreme caution before touching brakedrums. Slowly move hand toward brakedrum. If brakedrum is oveheated, radiated heat will be felt before actually touching brakedrum.	
			•	b. After operation, cautiously feel brakedrums and hubs for excessive heat.	Any evidence of overheating.
6				SUSPENSION, AXLES, AND WHEEL BEARINGS	
				NOTE if vehicle was required to ford water that covered the wheel hubs, have Unit maintenance check clean, and lubricate wheel bearings in accordance with the lubrication order.	
		•		At all times during operation be alert for unusual noises that may indicate looseness, defects, or deficient lubrication in these areas.	
7				ROAD TEST	
		•		Be alert for any unusual noises or abnormal conditions that might indicate a shifting of the load or defective performance of deify set.	

Section III. OPERATION UNDER USUAL CONDITIONS

Paragraph Titles	Page Number
Attaching Dolly Set to Shelter	2-9
Coupling Dolly Set with Shelter to Towing Vehicle	2-31
Coupling Front and Rear Dollies	2-45
Detaching Dolly Set from Shelter	2-40
General	2-8
Leveling Shelter	2-30
Lifting Shelter	2-27
Lowering Shelter	2-36
Towing Dolly Set with Shelter	2-34
Towing Dolly Set Without Shelter	2-52
Uncoupling Dolly Set with Shelter from Towing Vehicle	2-34
Using and Storing Dolly Set Caster Assemblies (M832 SN J089-001 thru 159 and J017-160 thru 350 Only)	2-8

2-9. GENERAL

a. This section contains instructions for safely operating doily sets under usual conditions. Unusual operating conditions are defined and described in Section IV of this chapter.

b. Review all towing vehicle operating instructions to prepare for coupling and uncoupling operations.

2-10. USING AND STORING DOLLY SET CASTER ASSEMBLIES (M832 SN J089-001 THRU 159 AND J017-160 THRU 350 ONLY).

NOTE

Only the M832 (SN J089-001 thru 159 and JO17-160 thru 350) is equipped with caster assemblies.

a. Rotate bearing post (1) counterclockwise to free caster wheel (6) from suspension bar (7).

Support bottom of caster assembly (2), remove pin (4), and removecasterassemMy (2) from brackets (3 and 5 on rear dolly.

Install pins on caster assembly (2) in upper mounting block (8) and rotate caster assembly (2) downward into lower mounting block (9).

d. Insert pin (4) through lower mounting block (9) and caster assembly (2).

e. Install two caster assemblies (2) in brackets (3 and 5) on rear dolly and secure each with pin (4) when not in use. For each caster assembly (2), rotate bearing post (1) clockwise until caster wheel (6) rests firmly against suspension bar (7).

2-10. USING AND STORING DOLLY SET CASTER ASSEMBLIES (M832 SN J089-001 THRU 159 AND J017-160 THRU 350 ONLY) (Con't).

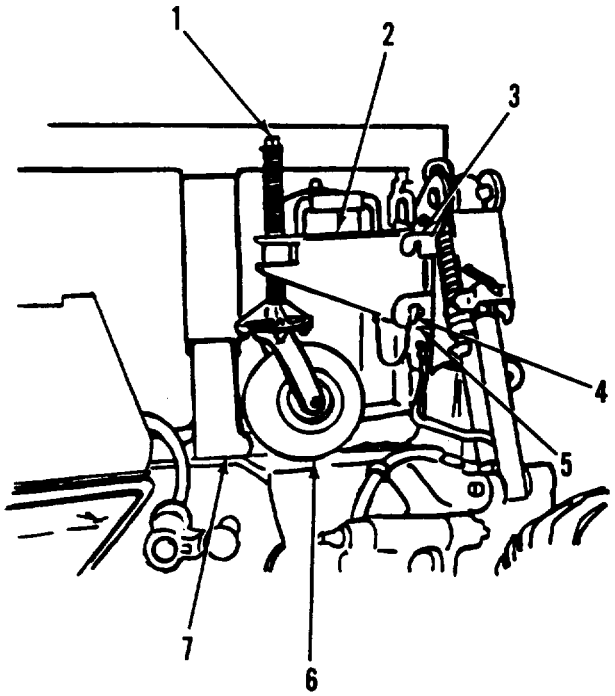

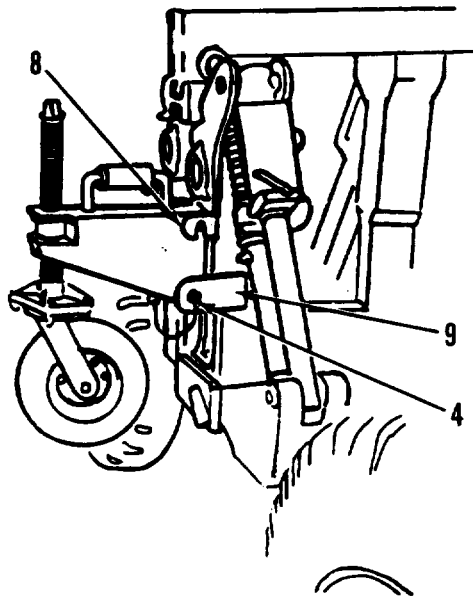

2-11. ATTACHING DOLLY SET TO SHELTER.

a. **M689.**

WARNING

All personnel must stand clear of towing vehicle and dolly set during uncoupling operations. Failure to follow this warning may result in serious injury or death to personnel.

NOTE

- **Before attaching dolly set to shelter, make sure shelter is resting on ground.**
- **Unless otherwise directed, attach dolly set to shelter so shelter door will be at rear.**

2-11. ATTACHING DOLLY SET TO SHELTER (Con't).

(1) Apply handbrakes (para 2-2).

(2) Disconnect safety chains (7), intervehicular cable (2), air hoses (5), and drawbar (6) from towing vehicle.

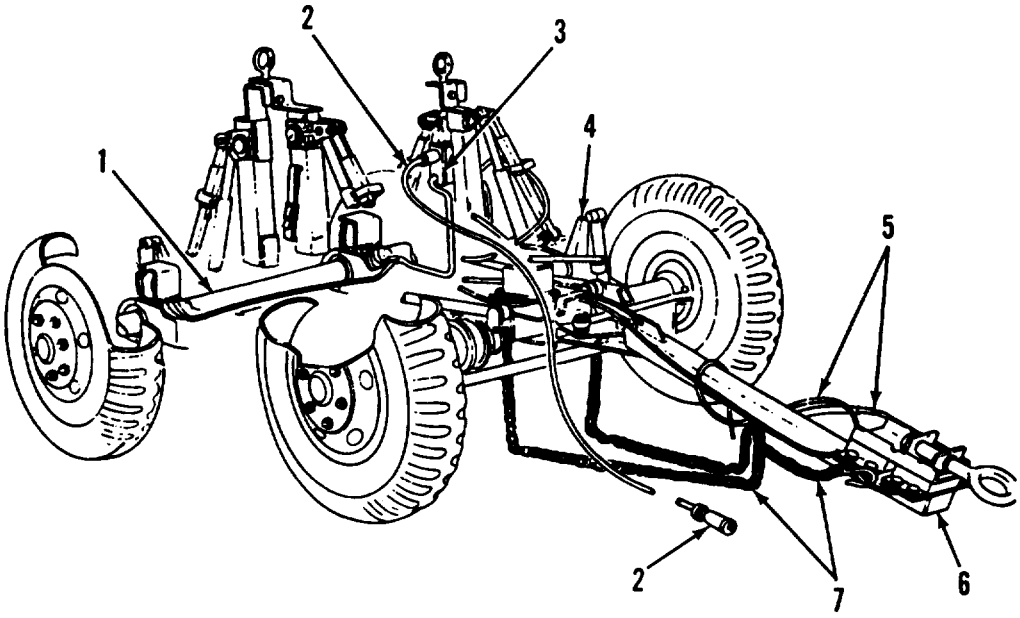

(3) Disconnect air hose quick-disconnect connector (8) from power cluster (9) on rear dolly (l). Coil air hose on front dolly (4).

(4) Disconnect intervehicular cable (2) from distribution box (3) on rear dolly (l). Coil cable on front dolly (4).

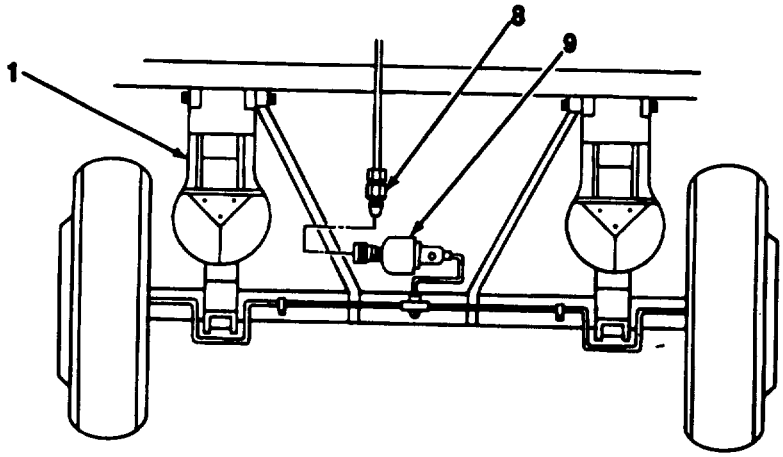

TOP VIEW

2-11. ATTACHING DOLLY SET TO SHELTER (Con't).

(5) Using four personnel, operate four lifting-leveling jack handles(11) counterclockwise at same time until mechanical stops are reached and suspension bars (10) rest on ground.

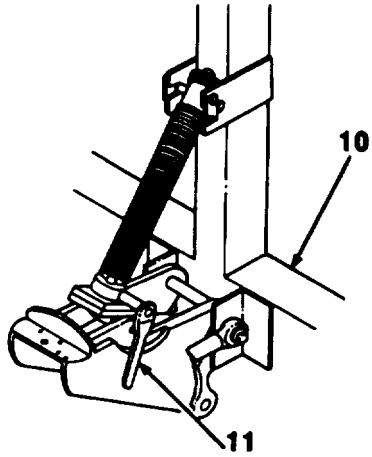

6 Remove four bolts (15) and two retaining blocks (12) from suspension bars (10).

7 Remove two coupling clamps (14) from suspension bar mounting tongues (13).

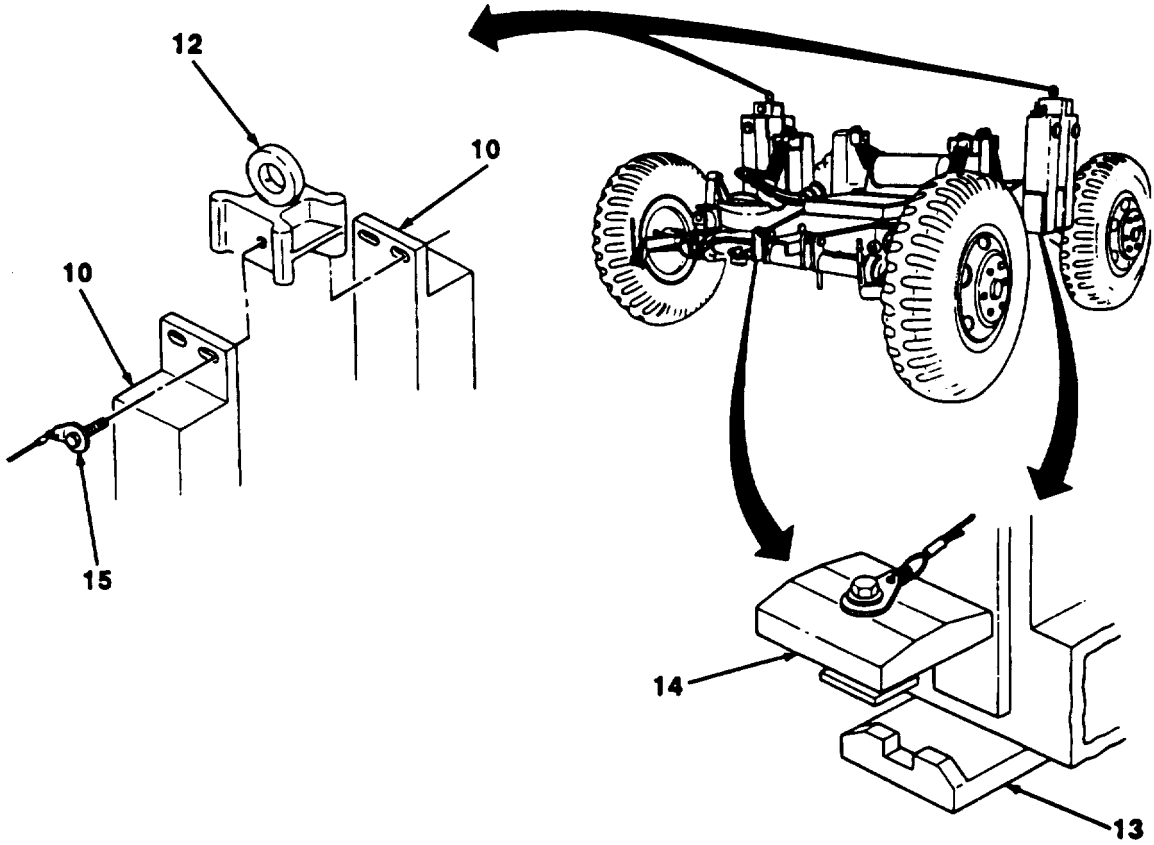

2-11. ATTACHING DOLLY SET TO SHELTER (Con't).

WARNING

When raising drawbar to vertical position, exercise care and control. Failure to do so may result In damage to shelter end in)uty to personnel.

(8) Raise drawbar (6), Install quick-release pin (18) in drawbar and position front dolly (4) so mounting tongues (13) are installed in brackets (21) at bottom of shelter (19).

(9) Lower drawbar (8) to lift suspension bar (10), ensuring that mounting tongues (13) remain fully installed in brackets (21) at bottom of shelter (19).

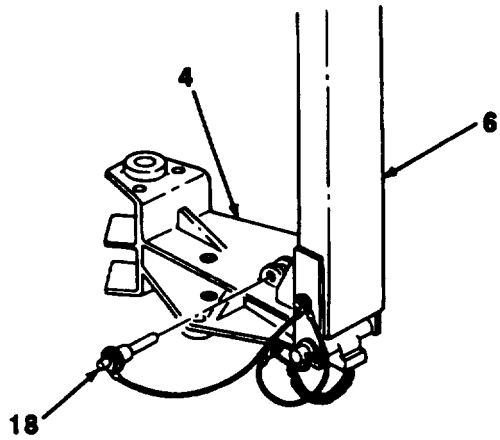

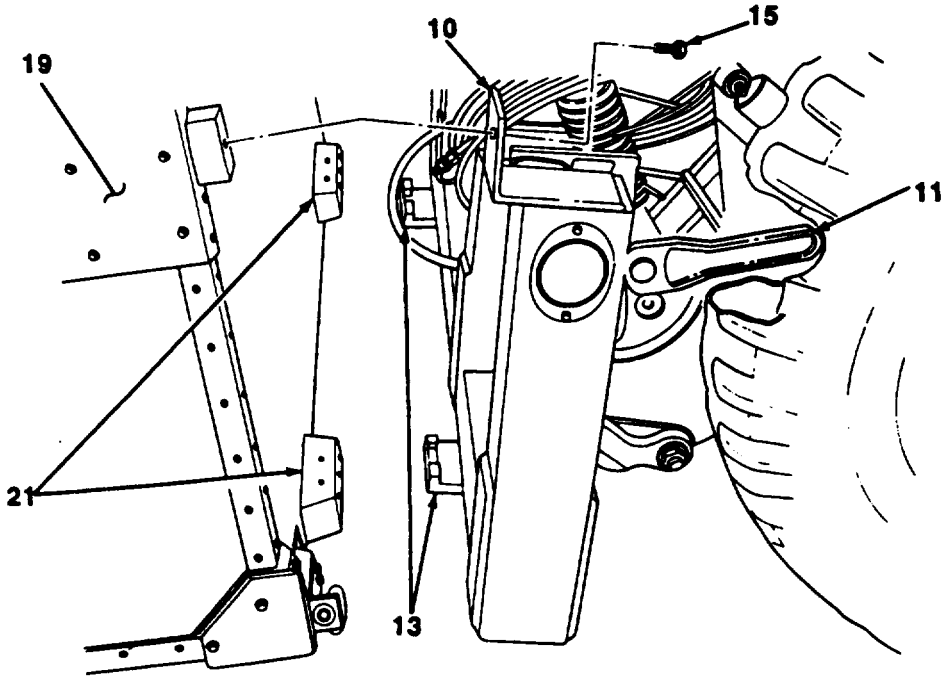

2-11. ATTACHING DOLLY SET TO SHELTER (Con't).

(10) Using two personnel, operate two lifting-leveling jack handles (11) clockvise at same time until upper surface of each suspension bar (10) rests against shelter (19).

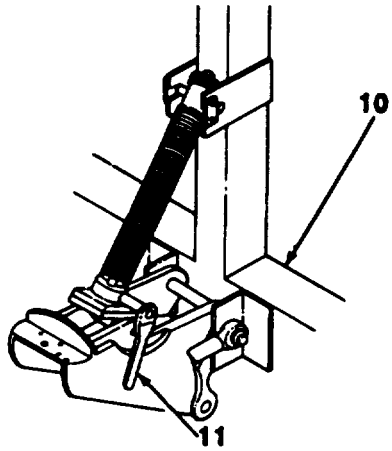

(11) Install two bolts (15) to secure suspension bar (10) to shelter comer brackets (20). Do not fully tighten bolts.

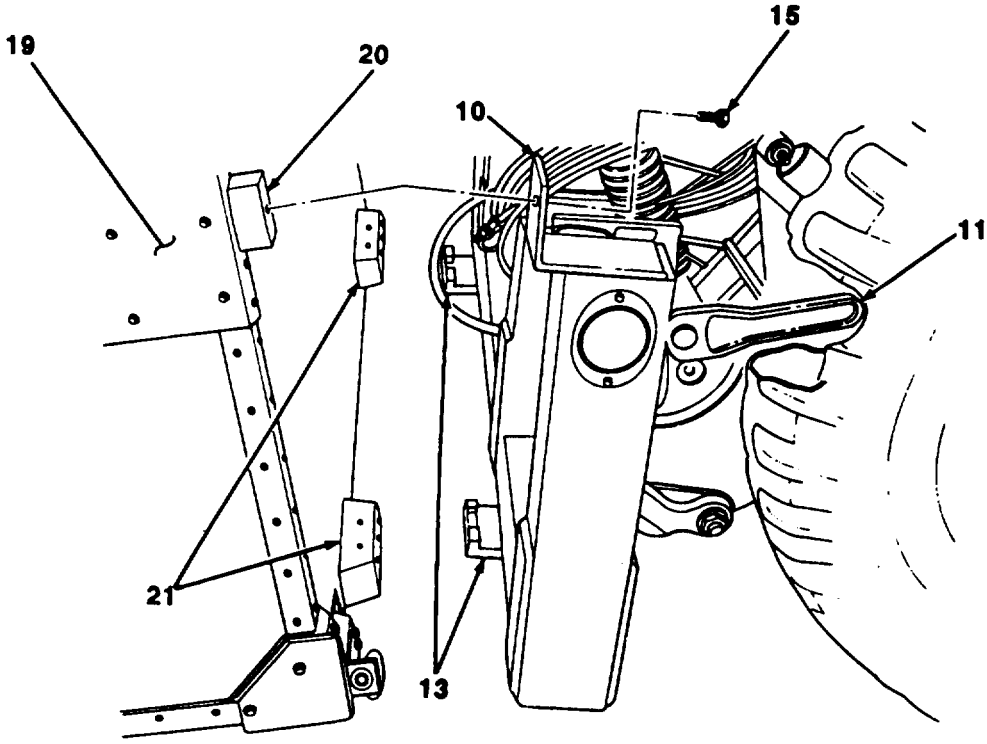

2-11. ATTACHING DOLLY SET TO SHELTER (Con't).

(12) Remove quick-release pin (18) and lower drawbar (6) to ground.

(13) Remove safety pin (16), pin (17), and drawbar (8) from front dolly (4).

(14) Install drawbar (6) to rear dolly (1) with pin (17). Install safety pin (16).

(15) Raise drawbar (6) and install quick-release pin (18).

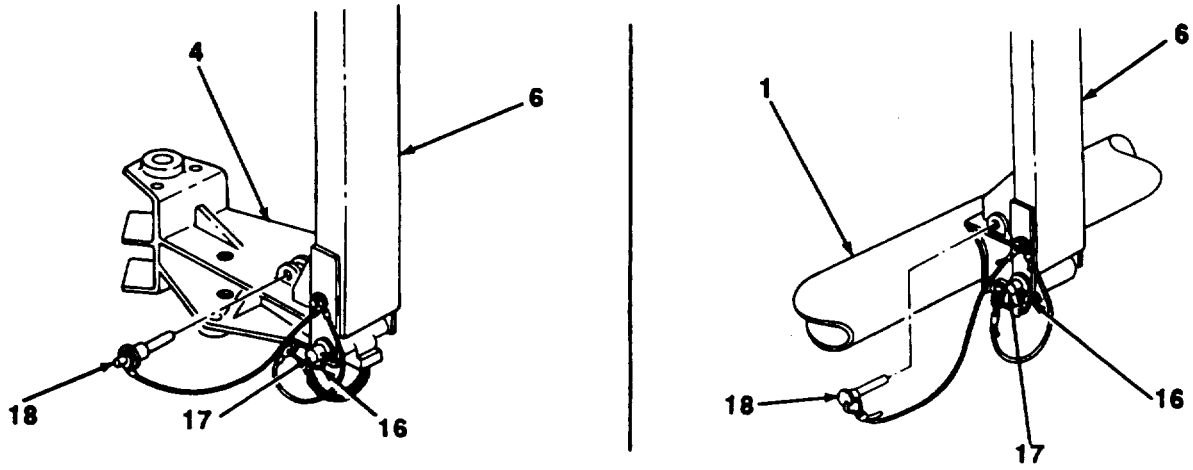

(16) Release handbrakes (para 2-2).

(17) Raise drawbar (6) and position rear dolly (1) so mounting tongues (13) are installed in brackets (21) at bottom of shelter (19).

(18) Lower drawbar (6) to lift suspension bar (10), ensuring that mounting tongues (13) remain fully installed in backets (21) of shelter (19),

(19) using two personnel, operate two lifting-leveling jack handles (11) clockwise at same time until upper surface of each suspension bar (10) rests against shelter (1 9).

(20) Install two bolts (15) to secure suspension bar (10) to shelter comer brackets (20). Do not fully tighten bolts.

(21) Apply handbrakes (para 2-2).

(22) Remove quick-release pin (18) and lower drawbar (6) to ground.

(23) Remove safety pin (16), pin (17) and drawbar (6) from rear dolly (1).

(24) install drawbar (6) to front dolly (4) with pin (17). Install safety pin (16).

2-11. ATTACHING DOLLY SET TO SHELTER (Con't).

b. M832 and M840

WARNING

All personnel must stand clear of towing vehicle and dolly set during uncoupling operations. Failure to follow this warning may result in serious injury or death to personnel.

NOTE

- Before attaching dolly set to shelter, make sure shelter Is resting on the ground.
- Unless otherwise directed, attach doily set to shelter so shelter door will be at rear.

(1) Apply handbrakes (para 2-2).

(2) Drain air from air tank reservoir by opening draincock,

(3) Disconnect two safety chains (7), intervehicular cable (2), two air hoses (5), and drawbar (6) from towing vehicle.

NOTE

M840 is shown.

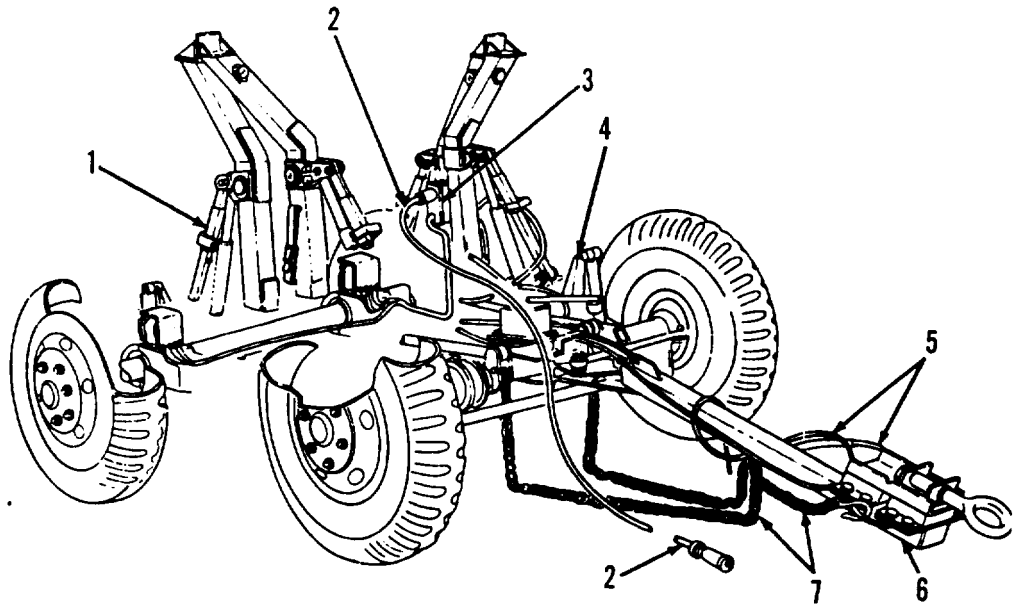

2-11. ATTACHING DOLLY SET TO SHELTER (Con't).

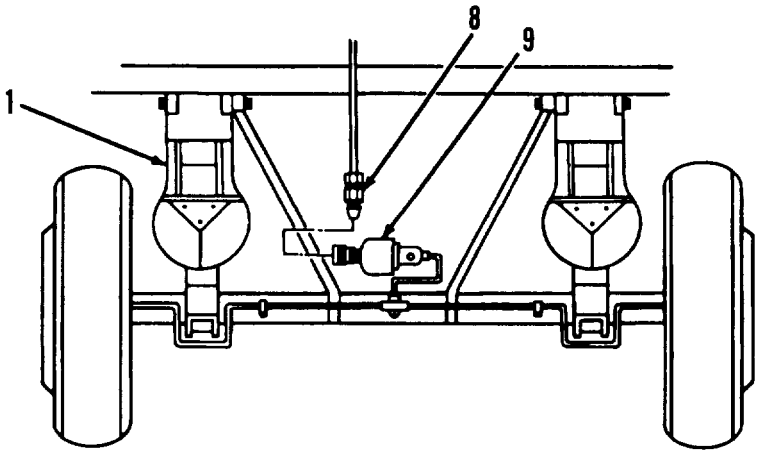

(4) Disconnect air hose quick-disconnect connector (8) from power cluster (9) on rear dolly (1). Coil air hoses (5) on front dolly (4).

(5) Disconnect intervehicular cable (2) from distribution box (3) on rear dolly (1). Coil intertvehicular cable (2) on front dolly (4).

NOTE

Steps 6 through 9 apply only to the M832 (SN J089-001 thru 159 and J017-160 thru 360). Skip steps 6 through 9 if working with any other model.

(6) Rotate bearing post counterclockwise to loosen wheel. Lift bottom of caster assembly (10), remove pin (11), and remove caster assembly (10) from brackets on rear dolly (1).

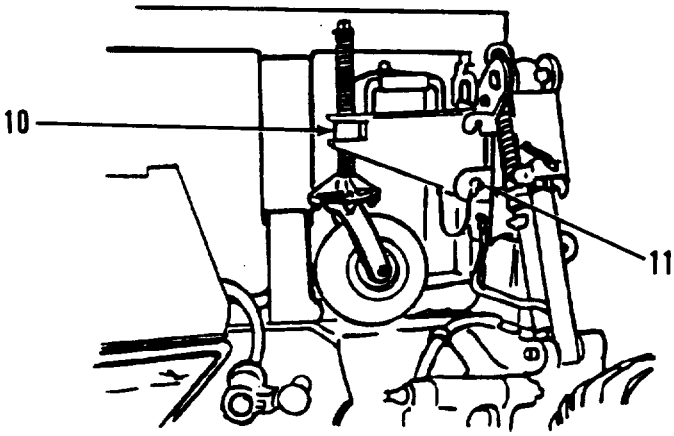

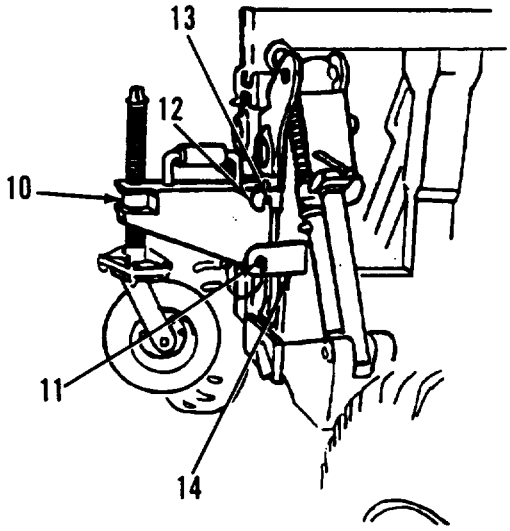

(7) Place pin (13) in upper mounting block (12) and rotate caster assembly (10) down into lower mounting block (14) to install caster assembly (10) at mounting point. Insert pin (11).

(8) Rotate control valve (16) clockwise to close valve.

2-11. ATTACHING DOLLY SET TO SHELTER (Con't).

(9) Rotate two leveling valves (15) counterclockwise to open valves.

NOTE

For the M832 (SN J089-001 thru 159 and J017-160 thru 350), skip steps 10 and 11.

(10) Rotate release valve lever (17) at front of each hydraulic pump (18) clockwise to PUMP position.

(11) Rotate four lifting-leveling jack valves (19) counterclockwise to open valves.

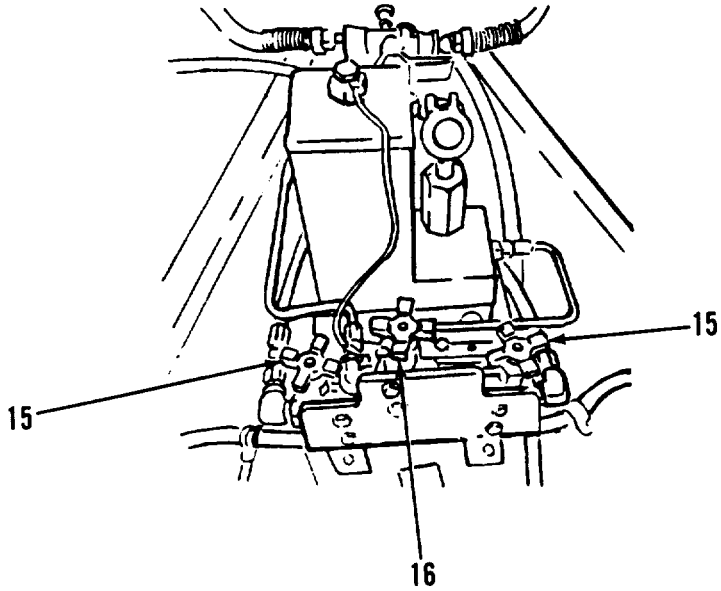

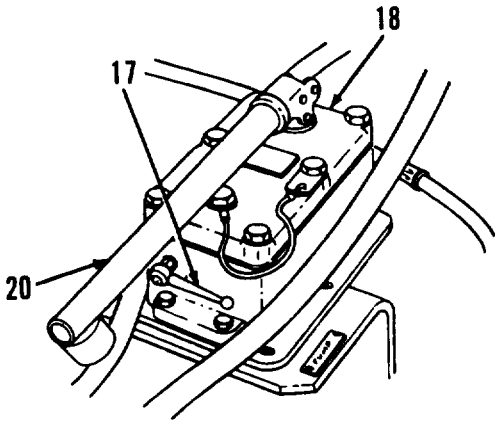

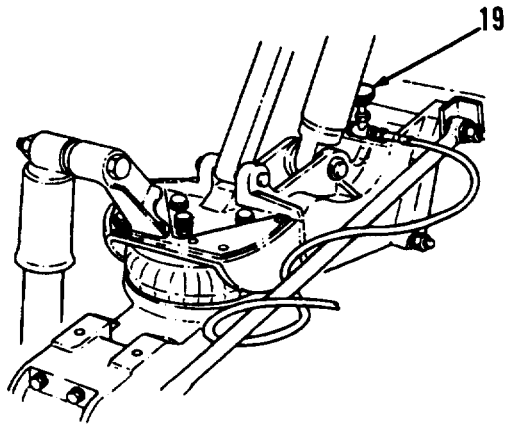

2-11. ATTACHING DOLLY SET TO SHELTER (Con't).

(12) Remove two handles (20) from dolly set toolbox and install handle (20) in each hydraulic pump (18 and 21). Operate each hydraulic pump (18 or 21) to slightly pressurize hydraulic system.

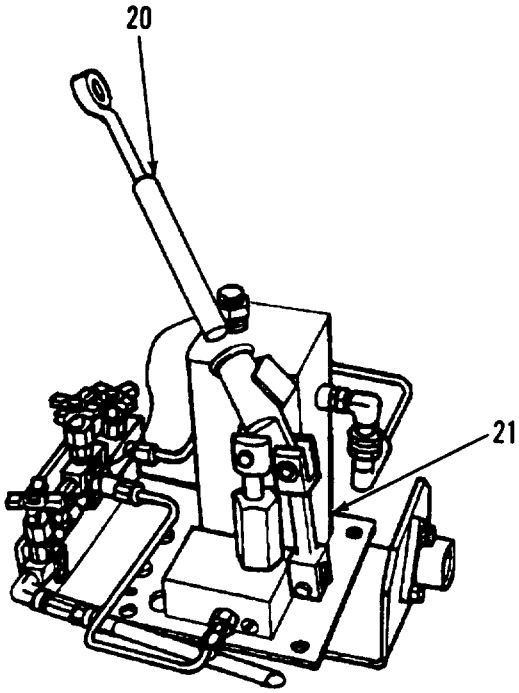

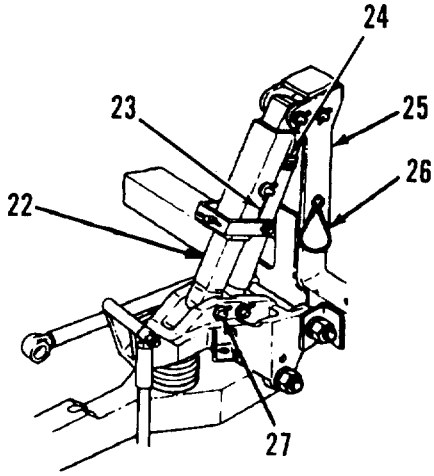

(13) Release four support strut clamps (23) by rotating clamp handles counterclockwise.

NOTE

For the M832 (SN J089-001 thru 159 and J017-180 thru 350), skip step 14 and perform step 15. Make sure dolly halves are lowered together.

(14) Slowly rotate release valve levers (17) to RELEASE position to lower suspension bars (25) to ground.

(15) Slowly open control valves (16) on front and rear dollies by rotating counterclockwise.

NOTE

For the M832 (SN J089-001 thru 159 and J017-160 thru 350), support struts must buckle during lowering. If they do not, close both control valves and pull outward on struts until they begin to buckle. Open control valves and continue lowering dolly halves. When halves are completely lowered, open control valves fully counterclockwise.

2-11. ATTACHING DOLLY SET TO SHELTER (Con't).

NOTE

Perform step 16 for the M832 to prevent each suspension bar from rotating forward.

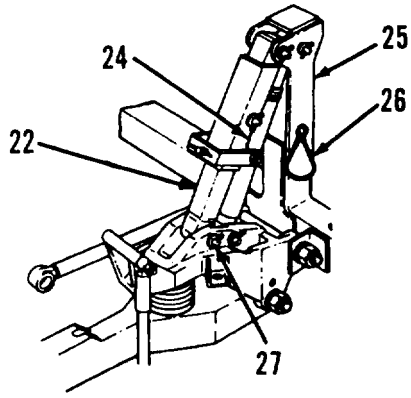

(16) Compress liftin9-leveling jacks (24) until two wire lanyards (26) on each suspension bar (25) aline with lower pins (27) on support struts (22). Install wire lanyard (26) over lower pin (27). Dolly set is now lowered and in lockout position.

(17) For the M832, remove two bolts (31) and retaining blocks (29) from suspension bars (28 and 30). Stow retaining blocks (29) in toolbox.

(18) For the M832, remove two bolts (32), lockwashers (36), coupling clamps (35), and~coupling clamp nuts (tee-blocks) (34) from suspension bar mounting tongues (33) to separate front dolly (4) and rear dolly (I).

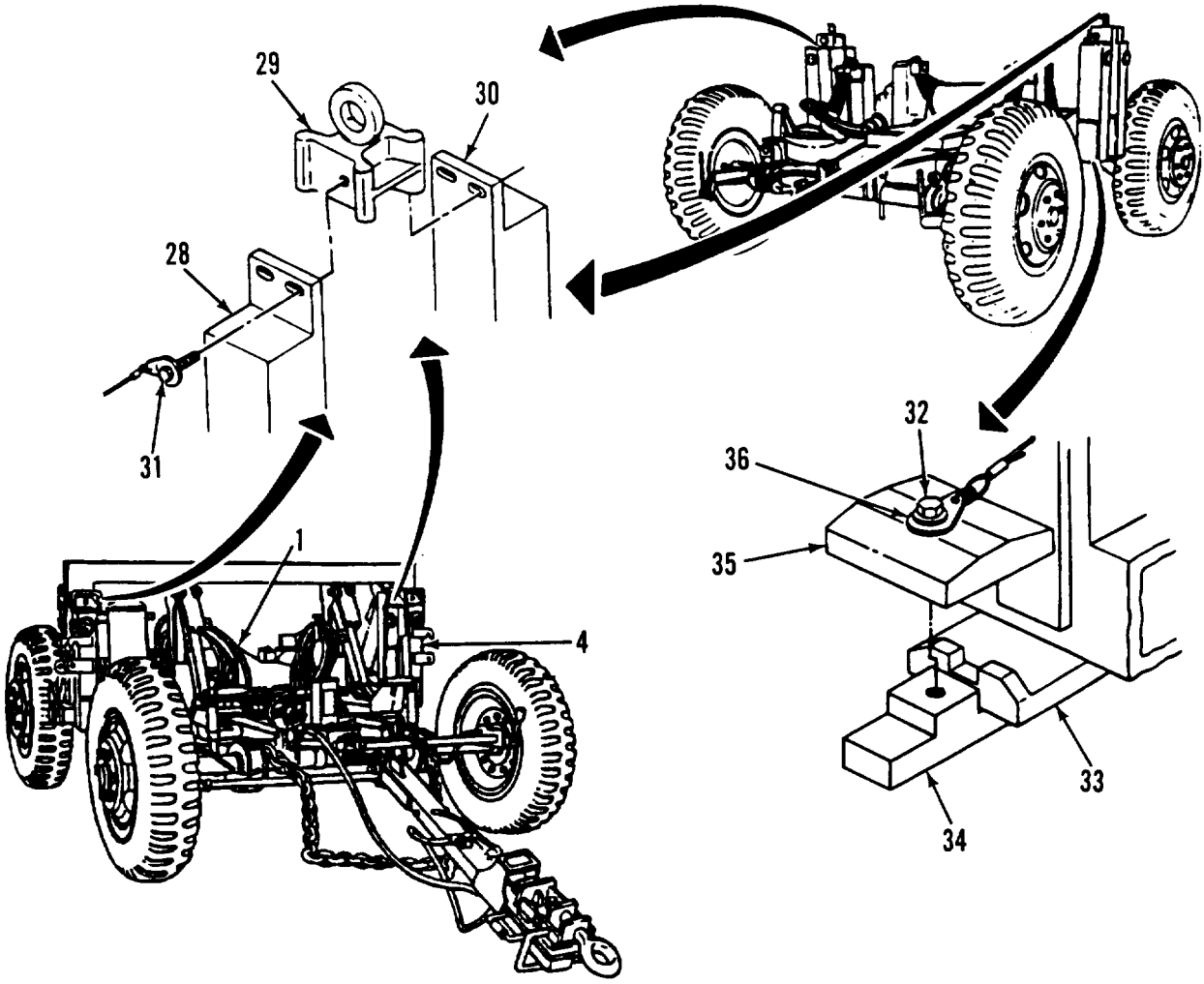

2-11. ATTACHING DOLLY SET TO SHELTER (Con't).

NOTE

Perform stops 19 and *20* for the M840 to prevent each suspension bar from rotating forward.

(19) Remove two bolts (37) from each~suspension bar (25) to separate front dolly (4) and rear dolly (1).

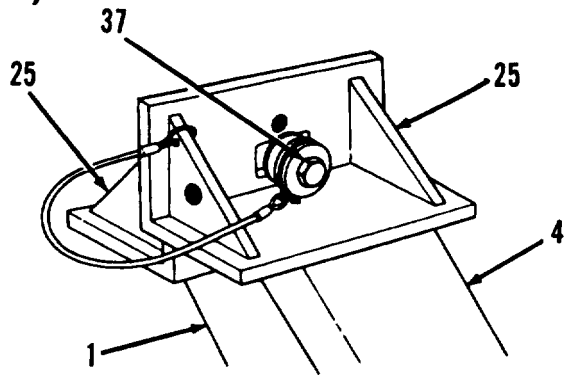

(20) Remove two lockpins (40) and quick-release pins *(38)* and disconnect two support struts (22) from each suspension bar *(25).* Compress lifting-leveling jacks (24) until holes in suspension bar aline with brackets (39) on support struts (22). Install two quick-release pins (38) and lockpins (40).

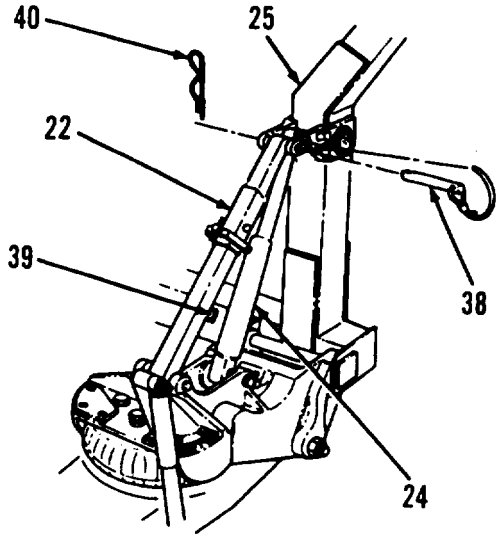

(21) Lock steering on front axle (41) by installing lanyard rod (42) in front axle connecting link (43).

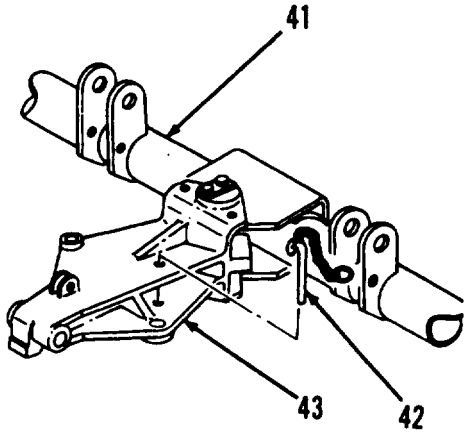

NOTE

For the M832 (SN J089-001 thru 159 and JO17-160 thru 350), perform steps 22 through 30 and skip steps 31 through 47. For all other models, skip steps 22 through 30 and perform steps 31 through 47. Rear dolly must be in lowered position with lockout feature engaged.

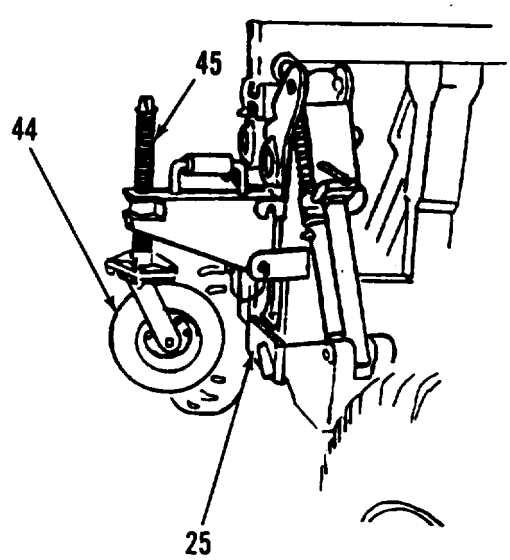

(22) Lower caster wheels (44) by turning caster wheel bearing post (45) clockwise until suspension bar (25) is slightly off ground.

2-11. ATTACHING DOLLY SET TO SHELTER (Con't).

(23) Release handbrakes and position rear dolly (1) to aline with two lifting lips (48) under shelter bracket (46).

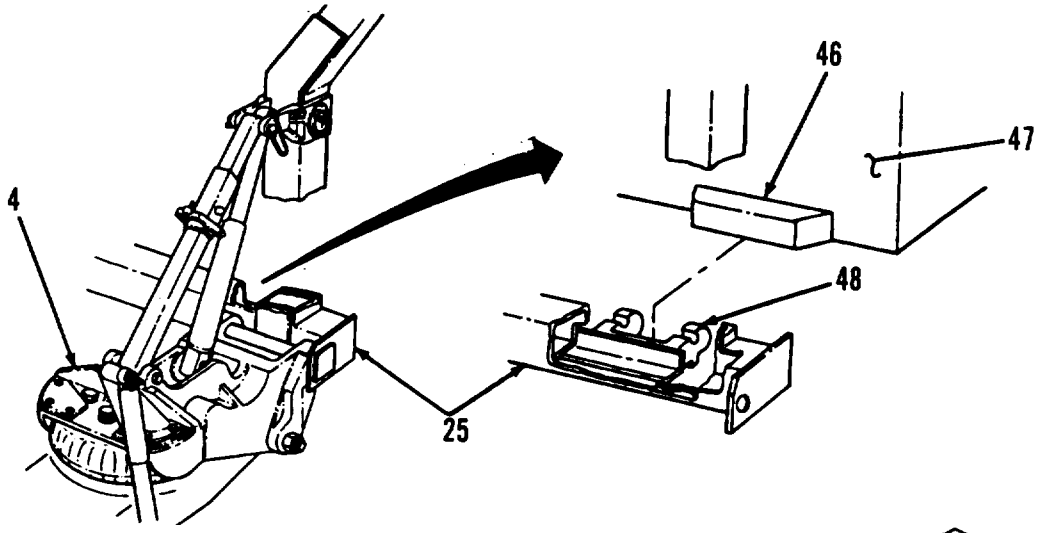

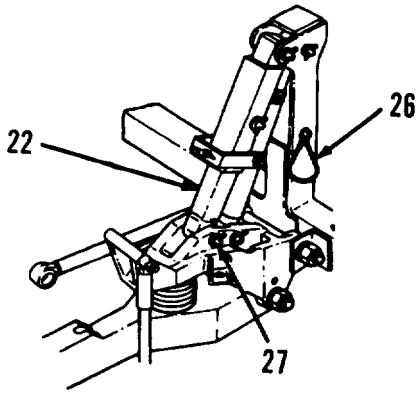

(24) Turn bearing post (45) clockwise and position dolly to engage lower lifting lips (48) to shelter bracket (46).

(25) Remove wire lanyard (26) from pin (27) on lower end of support strut (22).

(26) Close control valve (16) by fully rotating clockwise. Operate pump (49) until upper surface of each suspension bar (25) rests against shelter (47).

(27) Install two bolts (31) through adapter bracket on suspension bar (28) and into shelter bracket (46).

(28) Turn bearing post (45) counterclockwise until two caster wheels (44) are off ground.

(29) Remove pins (11) and caster assemblies (10) from rear dolly (1). Install pins (11) and caster assemblies (10) on front dolly *(4).* Repeat steps 22 through 27 using front dolly.

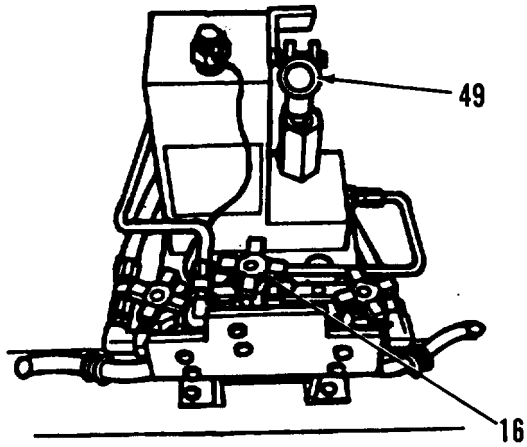

2-11. ATTACHING DOLLY SET TO SHELTER (Con't).

(30) Remove caster assemblies (10) from front dolly half. Install caster assemblies (10) to mounting brackets on rear dolly (1) and secure with two pins (11). Rotate bearing post (45) clockwise to secure caster wheel (44) against suspension bar (25).

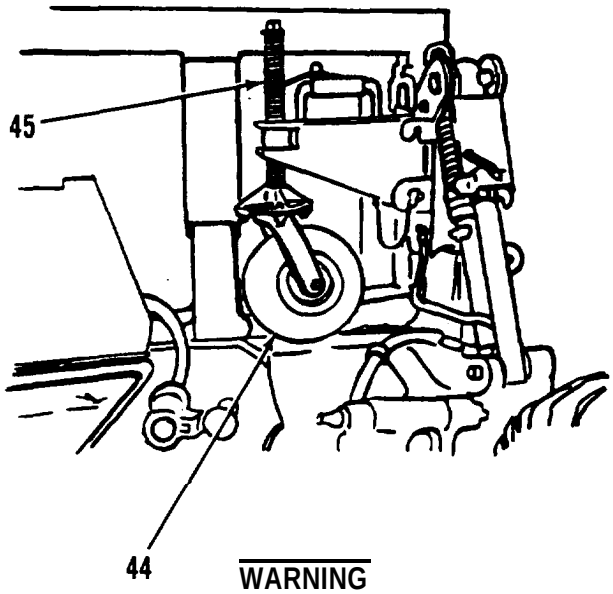

WARNING

- Drawbar is heavy (120 pounds). Use two persons when lifting or lowering drawbar. Failure to do so may result in damage to shelter and injury to personnel.
- When raising drawbar to vertical position, exercise care and control. Failure to do so may result in damage to shelter and injury to personnel.

NOTE

For the M832 (SN J089-001 thru 159 and J017-160 thru 350), skip to step 48.

(31) Raise drawbar (6) to vertical position and secure with quick-release pin (50).

2-11. ATTACHING DOLLY SET TO SHELTER (Con't).

NOTE

Procedure for alining mounting tongues with brackets sat bottom of shelter are similar for M840 and M832. M840 is shown.

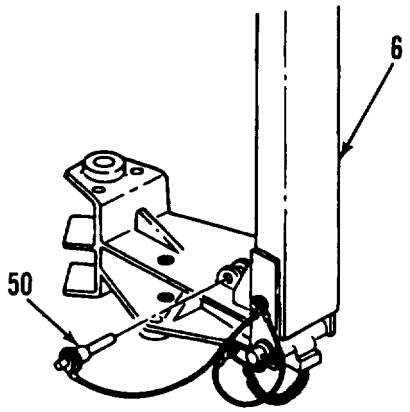

(32) Using drawbar (6) as a lever, lift suspension bar (25) from ground and position front dolly (4) until lifting lips (48) of dolly are alined with two brackets (46) at bottom of shelter (47).

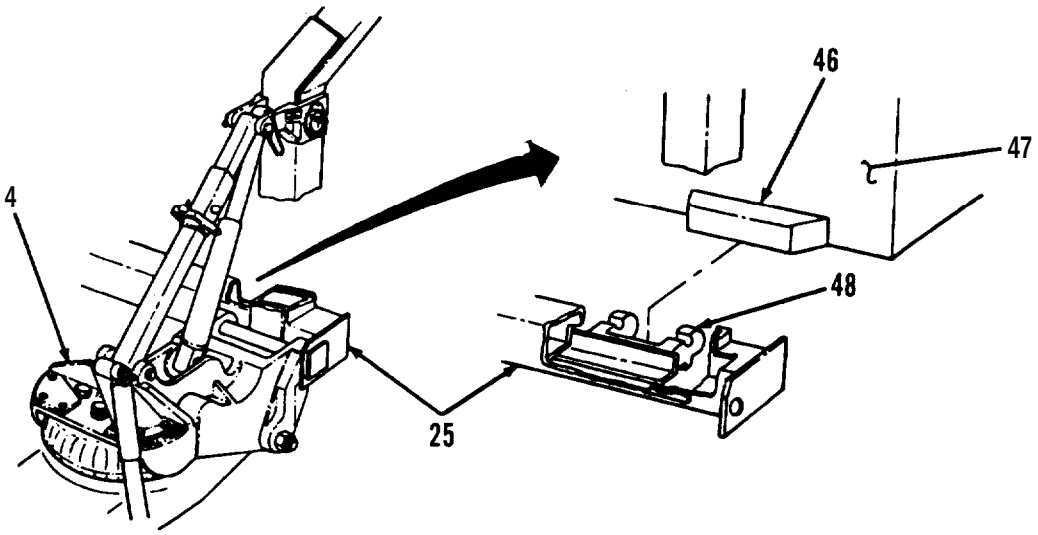

2-11. ATTACHING DOLLY SET TO SHELTER (Con't).

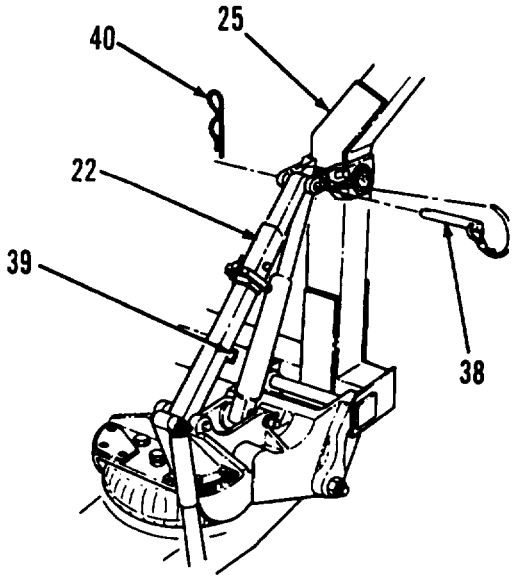

(33) For the M840, remove two lockpins (40) and quick-release pins (38) from brackets (39) of support struts (22). Aline holes at ends of support struts (22) with holes in suspension bar (25), and install two quick-release pins (38) and lockpins (40).

(34) For the M832, remove two wire lanyards (26) from around lower pins (27) on support struts (22).

(35) Lower drawbar (6) to lift suspension bar (25), ensuring that lifting lips (48) remain fully installed in brackets (46) at bottom of shelter (47).

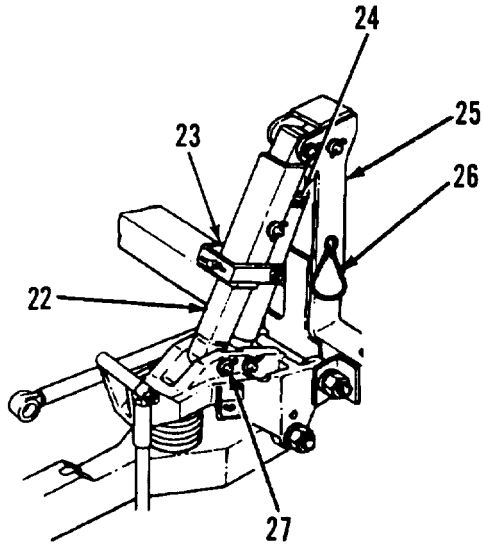

(36) Rotate release valve lever (17) to PUMP position.

(37) Operate hydraulic pump (18) until upper surface of each suspension bar (25) rests against shelter (47).

(38) Install two bolts (37) and fully tighten.

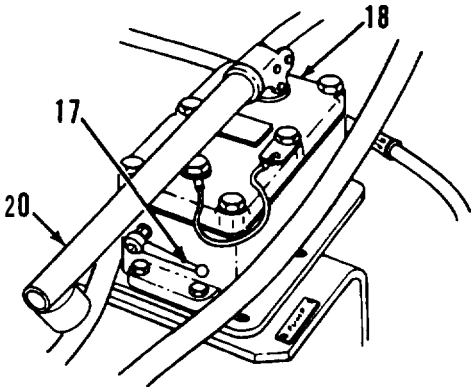

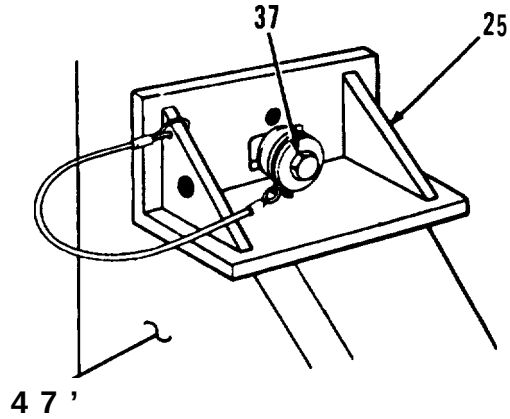

2-11. ATTACHING DOLLY SET TO SHELTER (Con't).

(39) Remove quick-release pin (50) from connecting link and lower drawbar (6) to ground.

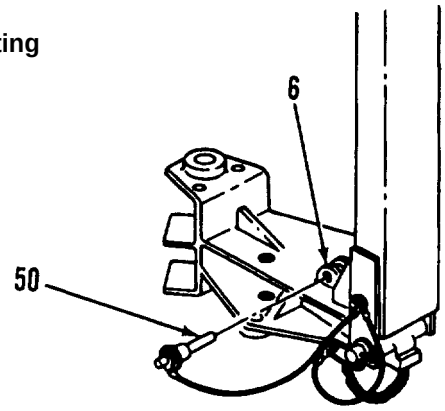

NOTE

Perform steps 40 through 44 to attach positioning bar to rear dolly.

(40) Remove pin (52) from positioning bar (53).

(41) Collapse length of positioning bar (53) and remove.

(42) Extend length of positioning bar (53), and install pin (52) through crosshole.

(43) Install positioning bar (53) on tube (51) at center of rear dolly (l). Rotate positioning bar (53) to lock firmly in place.

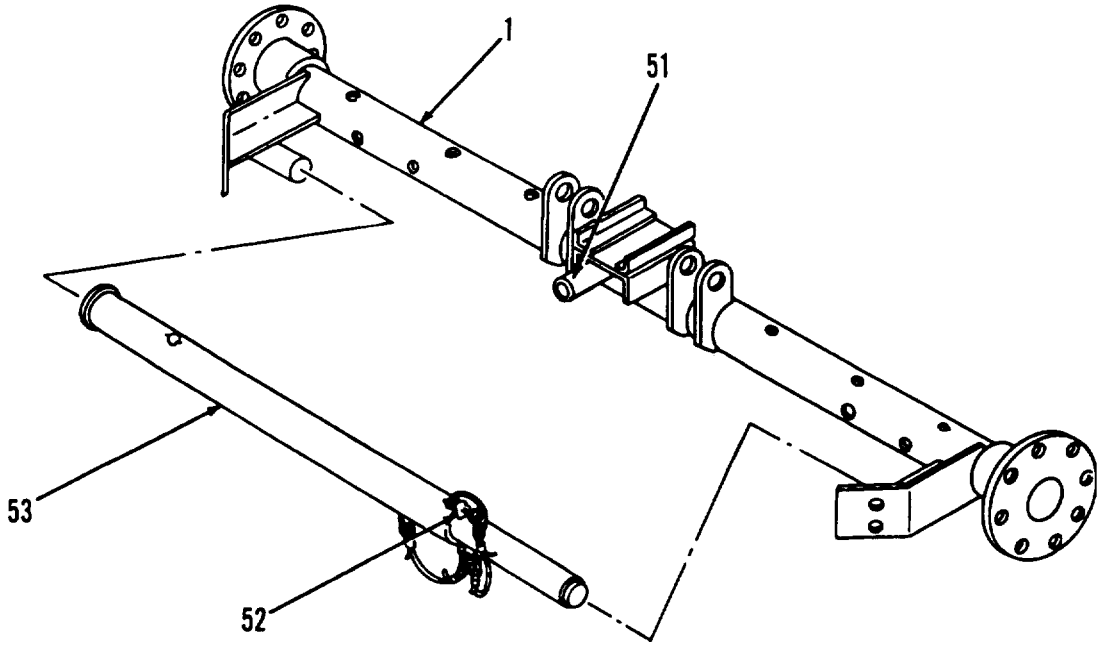

2-11. ATTACHING DOLLY SET TO SHELTER (Con't).

(44) Release handbrakes (para 2-2).

(45) Attach rear dolly (1) to shelter (47) in same way as front dolly (see steps 32 through 39) using positioning bar (53) as lever instead of drawbar (6).

(46) Apply handbrakes (para 2-2).

(47) Remove and stow positioning bar (53) on rear dolly (1).

(48) For all models, remove lanyard rod (42) from front axle connecting link (43).

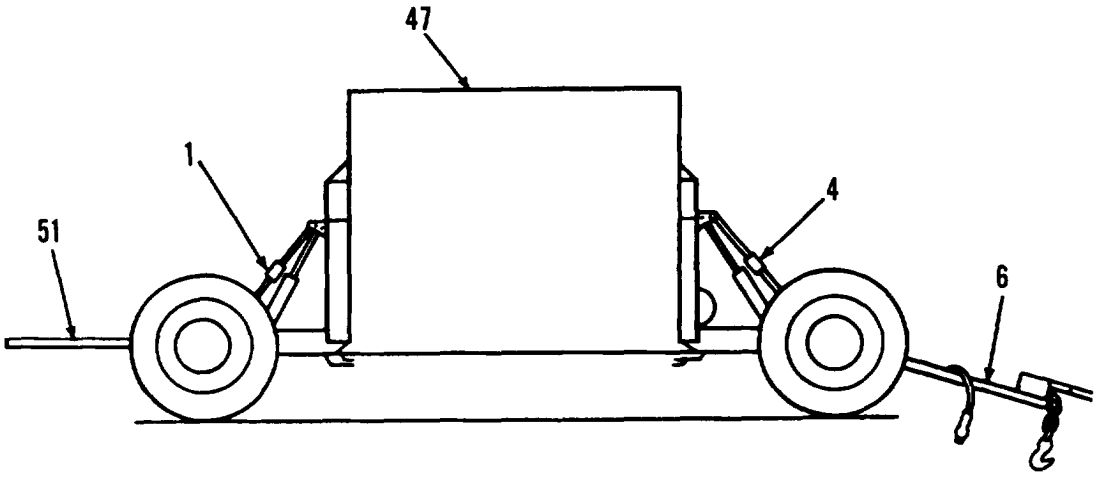

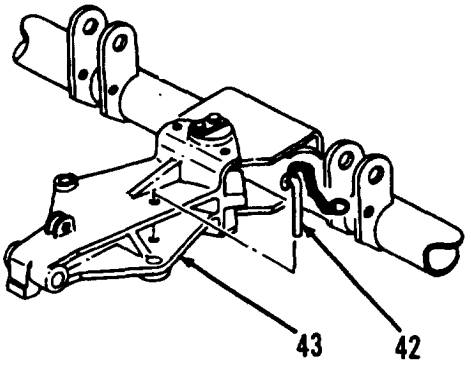

2-12. LIFTING SHELTER.

a. M689.

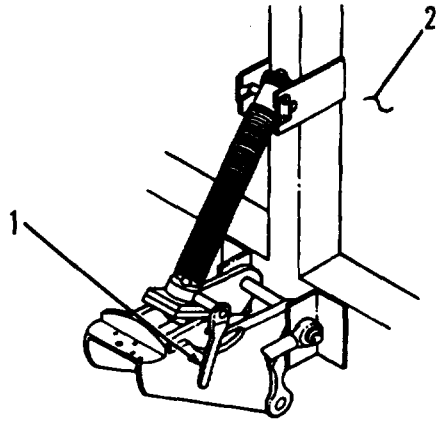

CAUTION

Do not attempt to lift shelter until both dollies are attached. Lifting shelter with one dolly may damage shelter or dolly.

(1) Using four personnel, operate four lifting-leveling jack handles (1) clockwise at same time, until shelter (2) is just clear of ground.

(2) Fully tighten four bolts (3) holding front (4) and rear dollies (5) to shelter (2).

(3) Continue lifting shelter (2) until mechanical stop is reached.

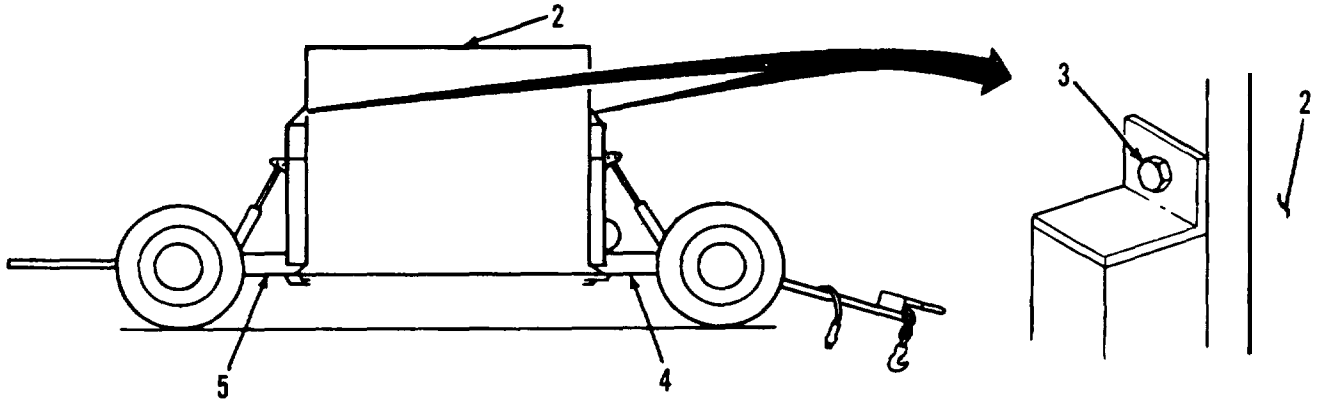

b. M832 (Except SN J089-001 thru 159 and J017-160 thru 350) and M840

CAUTION

Do not attempt to lift shelter until both dollies are attached. Lifting shelter with one dolly may damage shelter or dolly.

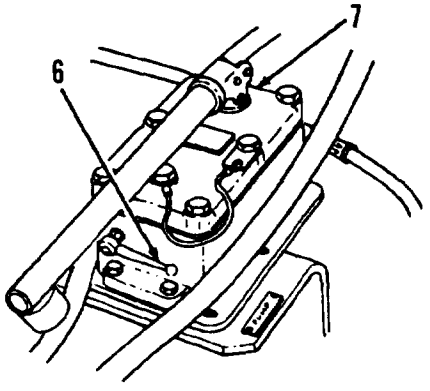

(1) Rotate release valve lever (6) at front of each hydraulic pump (7) to PUMP position.

(2) Using two personnel, operate hydraulic pumps (7) until shelter (2) is lifted and all four support struts (9) are fully extended.

2-12. LIFTING SHELTER (Con't).

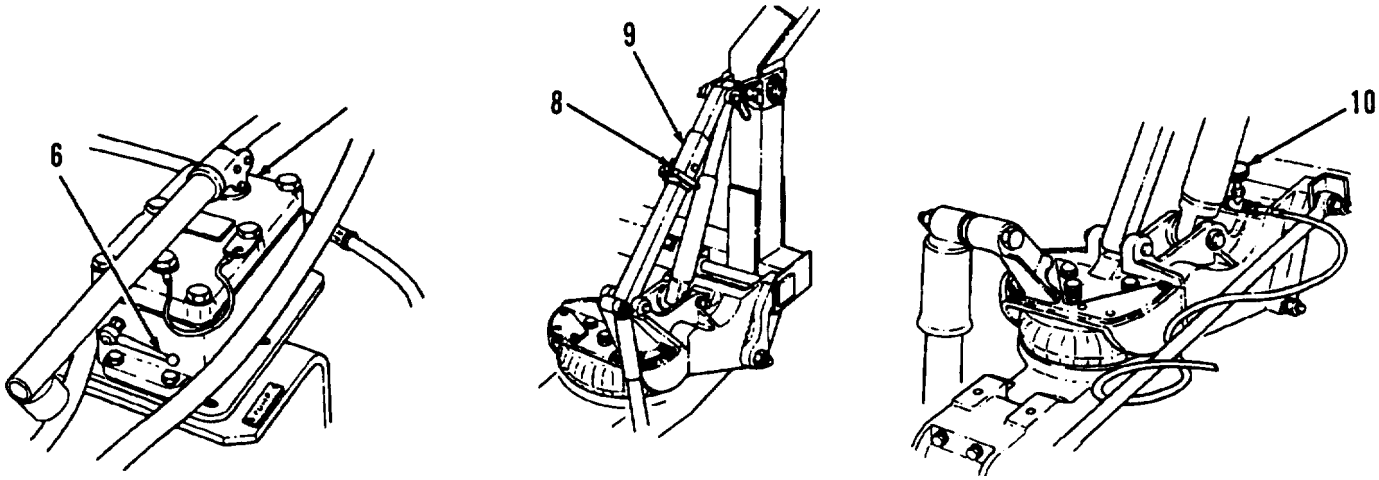

(3) Tighten four support strut clamps (8).

(4) Rotate release valve lever (6) at front of each hydraulic pump (7) to RELEASE position.

(5) Rotate four lifting-leveling jack valves (10) clockwise to close valves.

c. M832 (SN J089-001 thru 159 and J017-160 thru 350 only).

CAUTION

Do not attempt to lift shelter until both dollies are attached. Lifting shelter with one dolly may damage shelter or dolly.

(1) Apply rear dolly handbrake (para 2-2).

(2) Open four ieveling valves (11) by rotating counterclockwise, and close two control valves (12) by rotating clockwise.

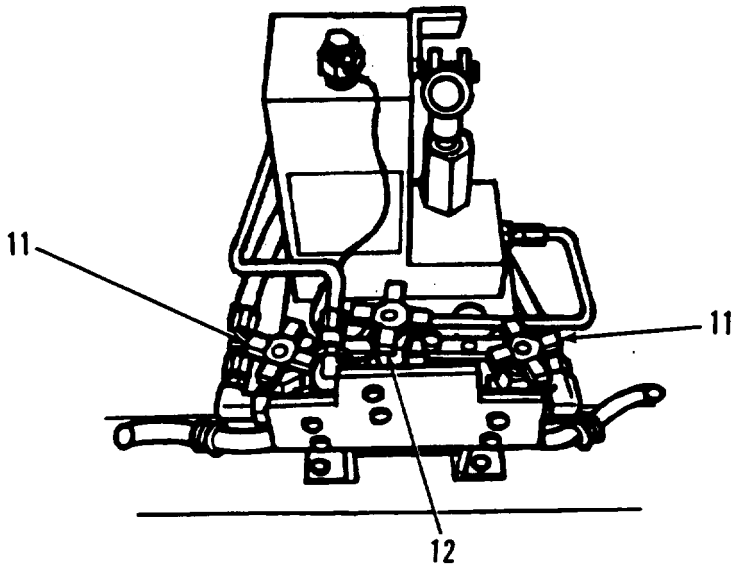

2-12. LIFTING SHELTER (Con't).

(3) Insert extension handle (13) into pump (14) and operate pumps on both dolly halves until all four support struts (15) are fully extended. Regulate pumping to raise shelter ends together.

(4) Rotate four strut clamp assemblies (16) upward and tighten until secure.

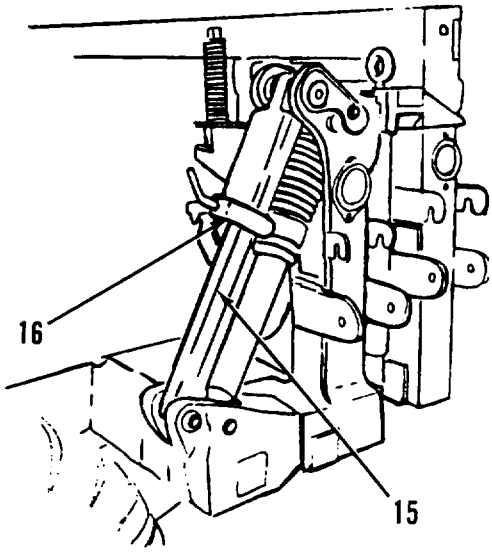

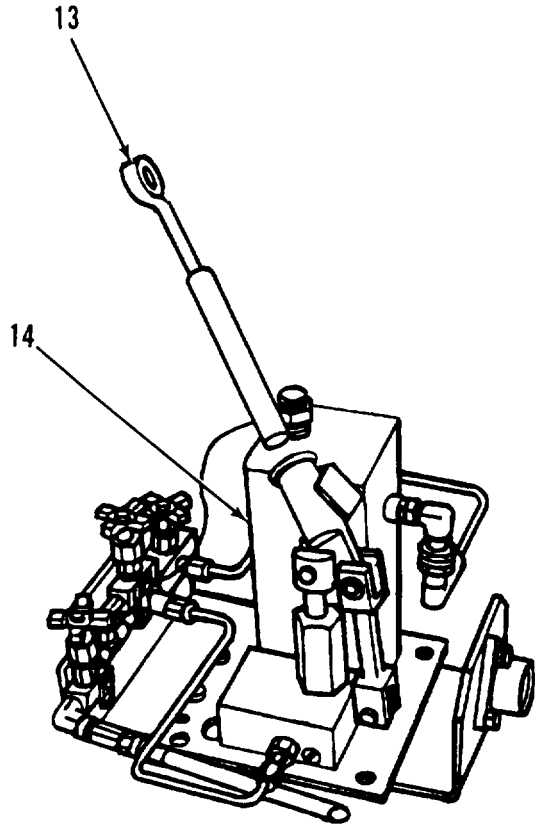

(5) Open two control valves (12) by rotating counterclockwise, and close four leveling valves (1 1) by rotating clockwise. Close control valves (12).

2-13. LEVELING SHELTER.

a. M869.

WARNING

When dolly set is not coupled to towing vehicle, make sure handbrakes are applied or wheels are securely chocked. Failure to do so may allow dolly set to roll, resulting in injury to personnel or damage to equipment.

NOTE

Leveling should be performed on level ground with shelter In fully raised position. When leveling shelter, lower high points instead of attempting to raise low points.

(1) Level shelter (1) front to rear by lowering high end [operate lifting-leveling jack handles (3) at high end counterclockwise].

(2) Level shelter (1) left to right by lowering high side [operate lifting-leveling jack handles (3) at high side counterclockwise].

(3) Set all four lifting-leveling jack handle ratchet levers (4) to position for raising.

(4) Secure each lifting-leveling jack handle (3) with tiedown strap (2).

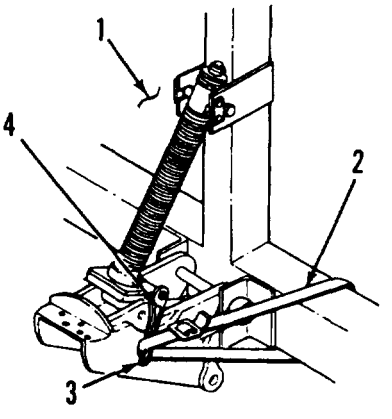

b. M832 and M840,

WARNING

When dolly set is not coupled to towing vehicle, make sure handbrakes are applied *or* wheels are securely chocked. Failure to do so may allow dolly set to roll, resulting in injury to personnel or damage to equipment.

NOTE

Leveling should be performed only for temporary placement or if parked on uneven terrain, and only when shelter and dolly are stationary. When leveling shelter, lower high points instead of attempting to raise low points.

2-13. LEVELING SHELTER (Con't).

(1) Releaseupportstrut clamp (5) at point to be lowered. Make sure support strut (6) buckles at pivot point

(2) Level shelter (1) front to rear by slowly opening two lifting-leveling jack valves (7) at high end.

(3) Level shelter (1) left to right by slowly opening two lifting-leveling jack valves (7) at high side.

(4) Close two lifting-leveling jack valves (7) when shelter (1) is level.

WARNING

Make sure struts are locked in position before moving dolly set, Failure to do so may result In injury or death to personnel.

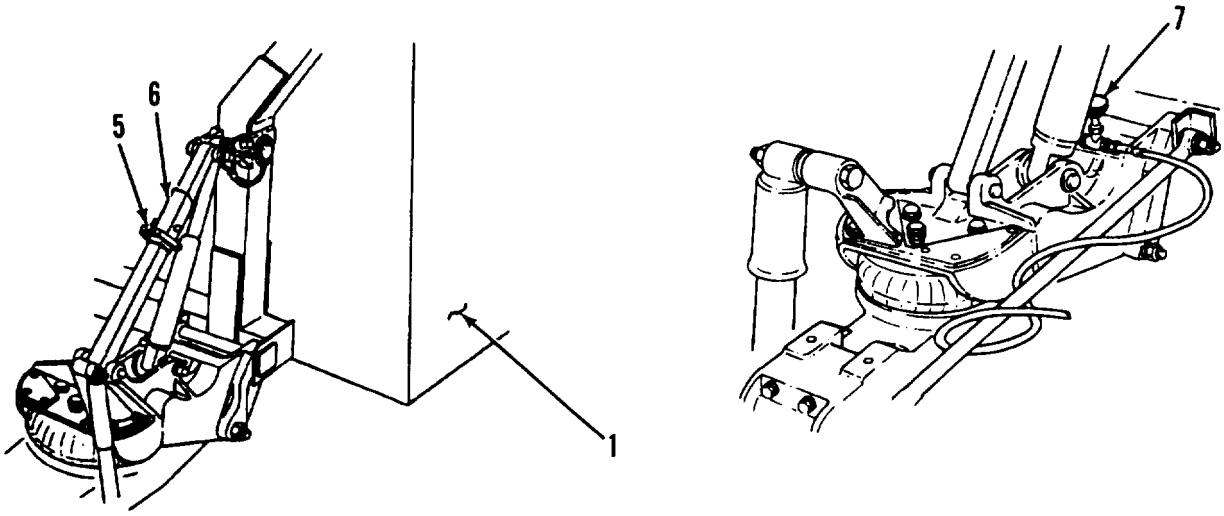

2-14. COUPLING DOLLY SET WITH SHELTER TO TOWING VEHICLE.

a. Connect air hose quick-disconnect connector (1) to rear power cluster (2).

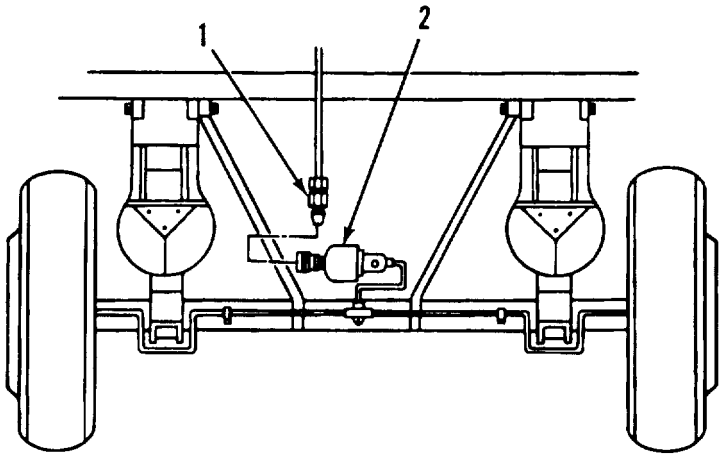

2-14. COUPLING DOLLY SET WITH SHELTER TO TOWING VEHICLE (Con't).

b. Connect intervehicular cable (6) to distribution box (3) on rear dolly (8).

c. Secure air hose (5) and intervehicular cable (6) along top of shelter (4) to front dolly (7).

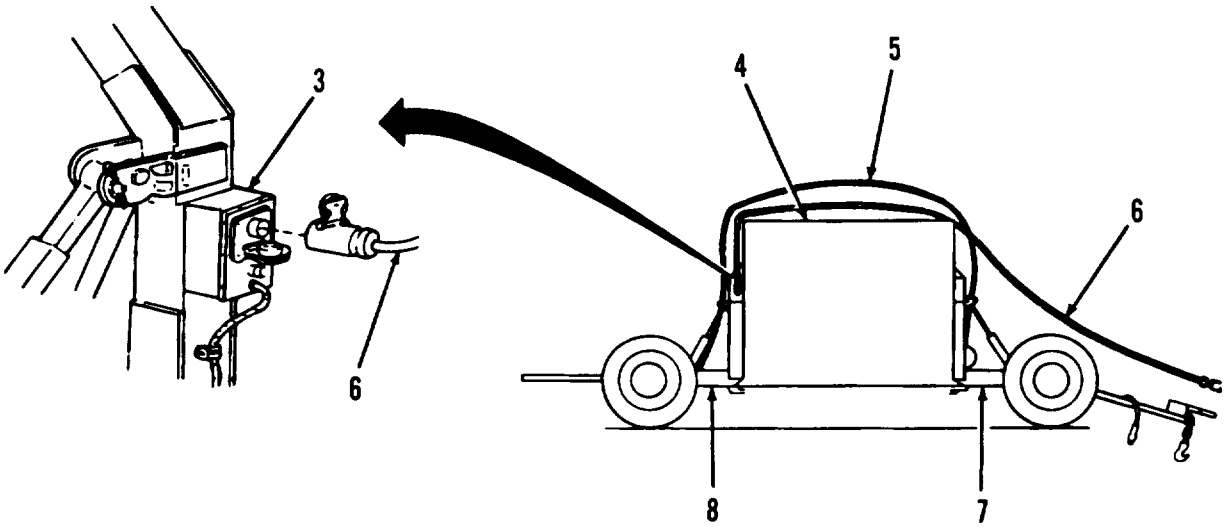

WARNING

All personnel must stand clear of towing vehicle and dolly set during coupling operations. Failure to follow this warning may result in serious injury or death to personnel.

d. For M832 and M840, remove lanyard rod (10) from front axle connecting link (9).

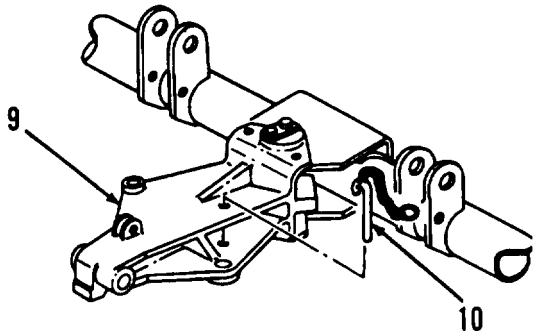

2-14. COUPLING DOLLY SET WITH SHELTER TO TOWING VEHICLE (Con't).

WARNING

Drawbar is heavy (120 lb). Use two persons to lift drawbar. Failure to follow this warning could result in injury or death to personnel.

e. Attach lunette (11) to towing vehicle.

f. Connect two safety chains (13) to towing vehicle.

g. Remove emergency and service air hoses (12) from dummy couplings. Connect emergency and service air hoses (12) and intervehicular cable (6) to towing vehicle. Open air valves on towing vehicle.

h. For the M832 and M840, make sure quick-release pins are installed and lifting-leveling jack valves are closed (pars 2-1 3).

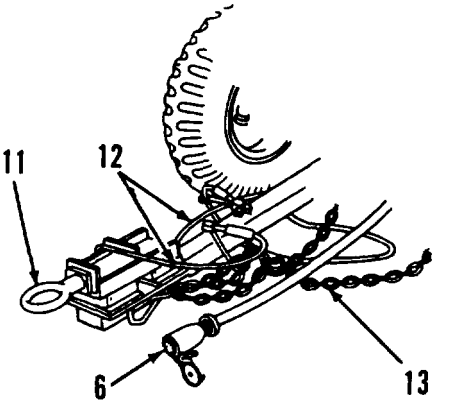

NOTE

- Proper air pressure in air springs is essential for smooth riding of shelter. Weight of shelter determines how much pressure should be in air springs. Dolly set should be on level ground with weight evenly distributed,
- If a pressure of more than 100 psi (689 kPa) is needed, notify Unit maintenance.

i. Use one of the following methods to inflate air springs to proper pressure depending on availability of air pressure and pressure gage:

Method 1:

- Lower shelter fully to ground (pare 2-17).

Ž When payload is under 6200 lb (2814.80 kg), inflate air springs (14) to "load off' pressure on data plate that corresponds to payload.

- Lift shelter to transport position (para 2-12).

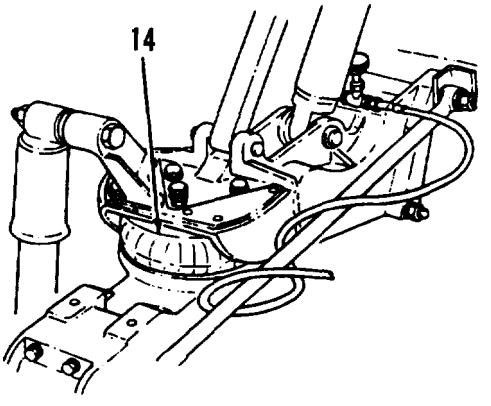

2-14. COUPLING DOLLY SET WITH SHELTER TO TOWING VEHICLE (Con't).

Method 2. Applies only to M832 SN J089-001 thru 159 and JO1 7-160 thru 350

- Raise shelter into position, making sure support struts are locked in place.
- Add or release air in air springs to aline shock absorber with markings. Do not exceed 180 psi (1 103 kPa).

j. Release handbrakes (para 2-2).

k. Check operation of lights and brakes

2-15. TOWING DOLLY SET WITH SHELTER.

NOTE

Refer to FM 21-305 for further information on safe driving practices.

a. Driving. Keep in mind overall length of towing vehicle and dolly set when passing other vehicles, turning, and backing.

b. Turning. When turning comers, remember that dolly set wheels turn inside turning radius of towing vehicle. Make right turn by driving towing vehicle approximately halfway into intersection and then cutting sharply to the right. This will keep dolly set wheels off the curb. Keep vehicle close enough to edge of road to prevent following vehicles from attempting to pass on right.

c. Stopping. During normal operation, stepping on brake pedal will stop both towing vehicle and dolly set. Apply brakes gradually and smoothly.

d. Parking. When parking for extended periods, both towing vehicle and dolly set handbrakes should be applied.

e. Backing.

(1) Have an assistant guide you while backing. Adjust rearview mirrors before backing.

(2) When towing vehicle and dolly set are in straight line, rear of dolly set will move opposite to direction front towing vehicle wheels are turned. When towing vehicle wheels are turned to right, rear of dolly set will move to left. When towing vehicle wheels are turned to left, rear of dolly set will move to right.

(3) To decrease angle of turn, gradually turn towing vehicle wheels in direction dolly set is turning. This will gradually decrease angle until towing vehicle and dolly set are in straight line.

2-16. UNCOUPLING DOLLY SET WITH SHELTER FROM TOWING VEHICLE.

a. Apply handbrakes (para 2-2).

b. Close air valves on towing vehicle, open draincock on dolly set air tank reservior, and disconnect emergency and service air hoses (1). Install emergency and service air hoses to dummy couplings on drawbar.

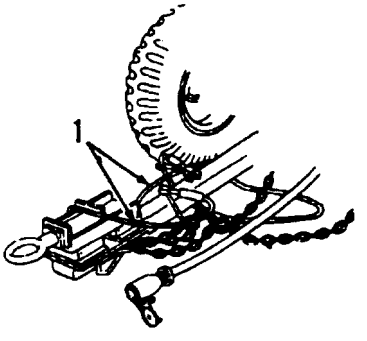

2-16. UNCOUPLiNG DOLLY SET WITH SHELTER FROM TOWING VEHICLE (Con't).

Disconnect air-hose quick-disconnect (3) from power cluster (5) of rear dolly (2). Coil air hose (4) on front dolly (8).

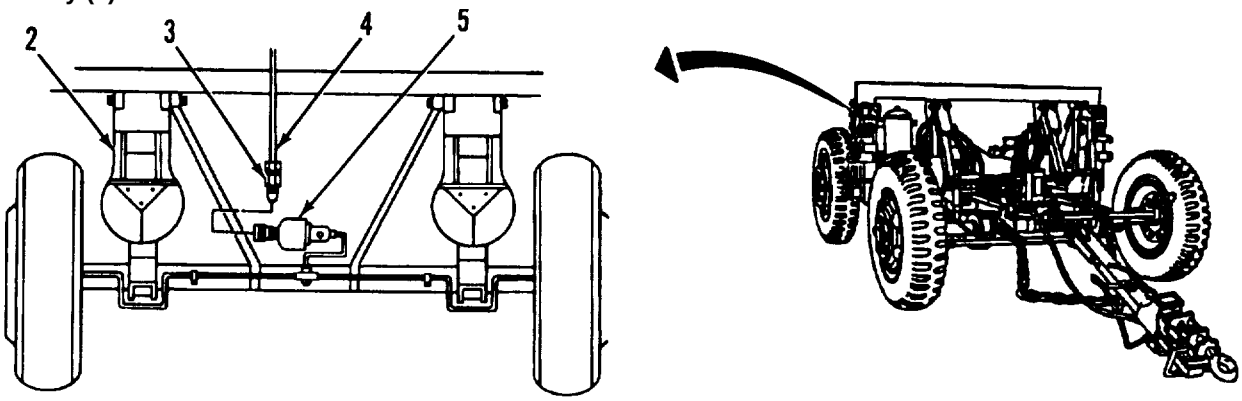

TOP VIEW

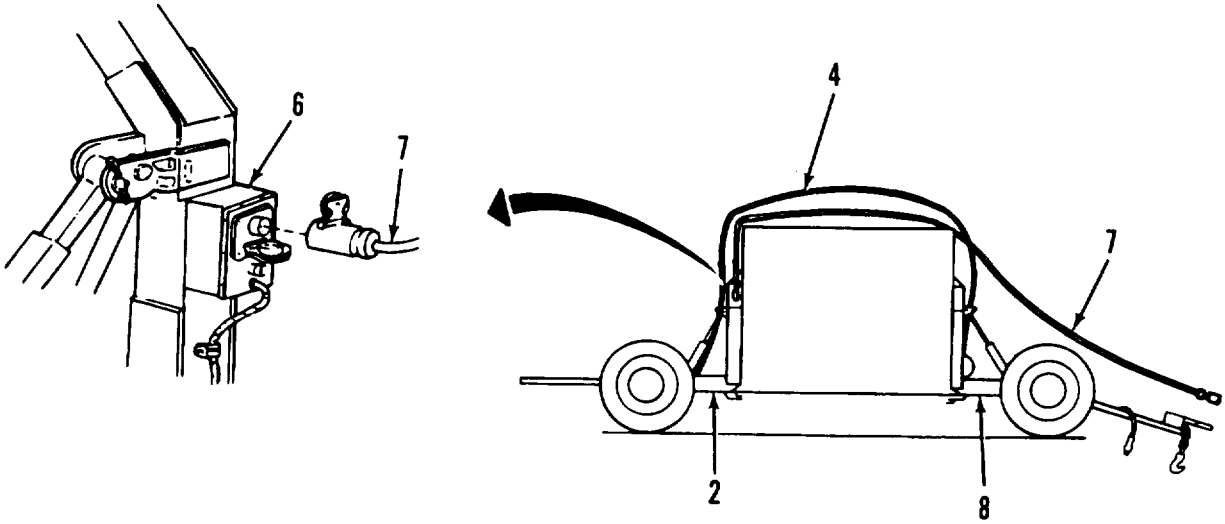

d. Disconnect intervehicular cable (7) from towing vehicle and distribution box (6) on rear dolly (2). Coil intervehicular cable on front dolly (8).

e. Disconnect two safety chains (9) from towing vehicle.

WARNING

All personnel must stand clear of towlng vehicle and dolly set during uncoupling operations. Failure to follow this warning may result in serious Injury or death to personnel.

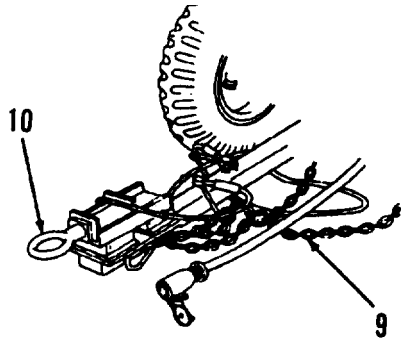

f. Remove drawbar coupler (10) from pintle of towing vehicle.

2-16. UNCOUPLING DOLLY SET WITH SHELTER FROM TOWING VEHICLE (Con't).

9. For M832 and M840, lock steering on front axle (11) by installing lanyard rod (12) into front axle connecting link (13).

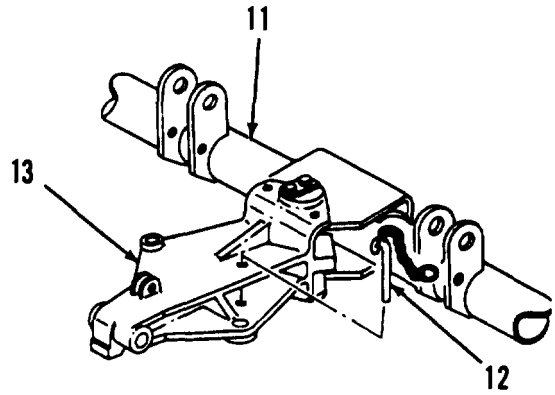

2-17. LOWERING SHELTER.

a. M689.

NOTE

Shelter should remain approximately level while being lowered.

(1) Remove tiedown straps (1) from each of four lifting-leveling jack handles (2).

(2) Using four personnel, operate lifting-leveling jack handles (2) counterclockwise, at same time, until shelter is resting on ground.

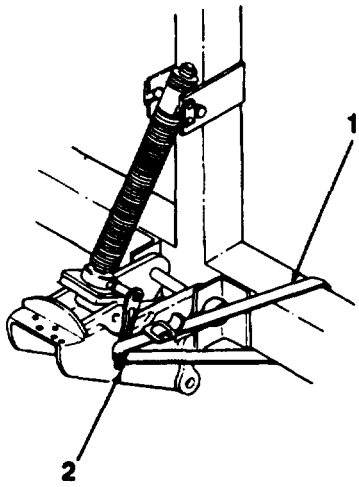

b. M832 (Except SN J089-001 thru 159 and J017-160 thru 350] and M840

(1) Rotate knobs of four lifting-leveling jack valves (4) counterclockwise to open valves.

(2) Rotate release valve lever (6) at front of each of two hydraulic pumps (7) to PUMP position.

(3) Remove two handles (5) from dolly set toolbox and install handle in each hydraulic pump (7). Using two personnel, operate hydraulic pumps to raise lifting-leveling jacks (3) slightly.

2-17. LOWERING SHELTER (Con't).

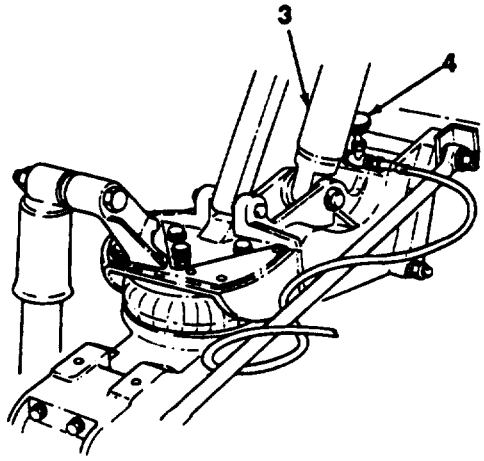

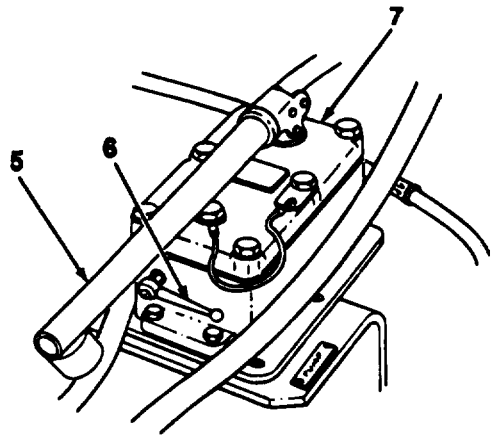

(4) Release support strut clamps (9) from four support struts (8) by rotating clamp handles counterclockwise.

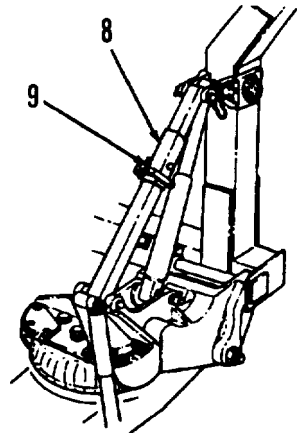

NOTE

If load is uneven, heavier side of shelter will drop faster than lighter side. If one side or end drops faster, close hydraulic pump valve lever (rotate to PUMP) and close lifting-leveling jack valve(s) on low side. Slowly open hydraulic pump valve and lifting-leveling jack valve(s) when shelter is again level.

(5) Using two personnel, slowly rotate release valve levers (6) to RELEASE position at same time, to lower shelter to ground.

2-17. LOWERING SHELTER (Con't).

c. M832 (SN J089-001 thru 159 and J017-160 thru 350 onlv).

(1) Set handbrakes (para 2-2).

(2) Disconnect two safety chains (3) and power cable (2) from towing vehicle.

(3) Close air valves on towing vehicle, then disconnect service and emergency air lines (1) at gladhands.

(4) Compress all four hydraulic cylinders (9) until two wire lanyards (10) on each suspension bar (8) aline with lower pin (11) on each of four support struts (6). Install wire lanyard (1 O) over lower pin (11). Dolly set is now lowered and in lockout position.

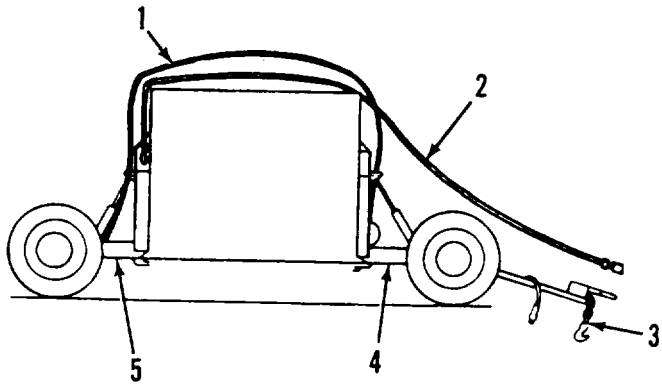

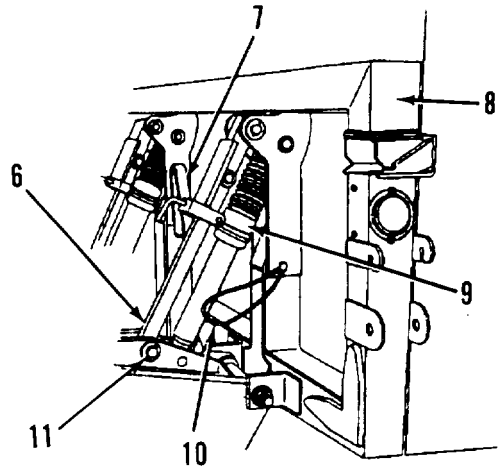

(5) Fully open two leveling valves (13) on front dolly (4) and rear dolly (5) by rotating leveling valves (13) counterclockwise. Close two control valves (12) by rotating clockwise.

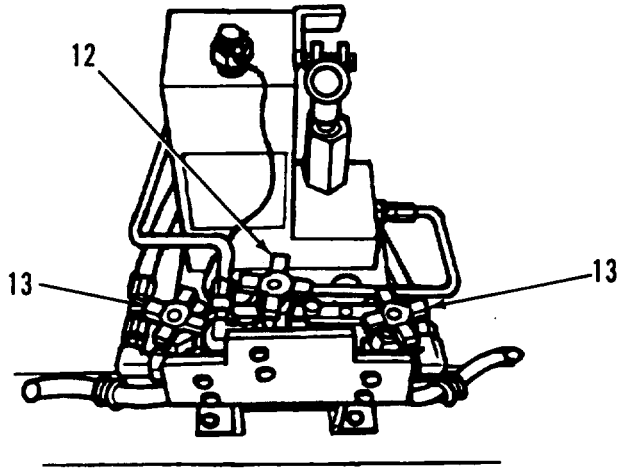

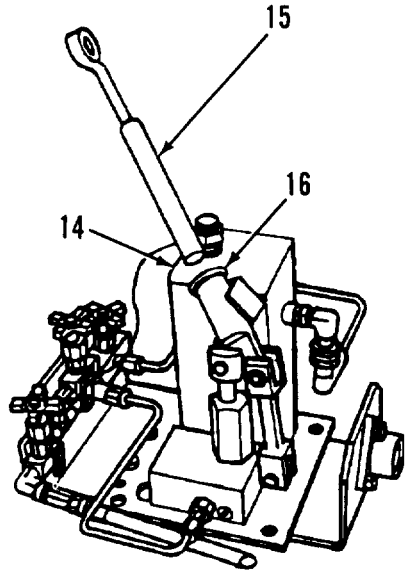

(6) Insert extension handle (15) into pump handle (16) and operate two hydraulic pumps (14) until ail four hydraulic cylinders (9) extend slightly.

2-17. LOWERING SHELTER (Con't).

(6) Loosen four clamp assemblies (7) on four support struts (6) and rotate clamps downward.

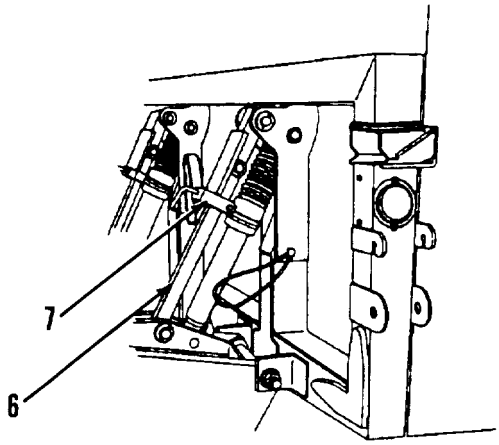

CAUTION

Make sure air lines and intervehicular cable are not under suspension bar when lowering. Components could be pinched or damaged.

NOTE

Make sure dolly halves are lowered together.

(7) Slowly open two control valves (12) on front dolly (4) and rear dolly (5) by rotating control valves (12) counterclockwise.

(8) Support struts (6) must buckle during lowering. If they do not, close both control valves (12) and pull outward on support struts (6) until they begin to buckle.

(9) Open control valves (12) and continue lowering halves. Once halves are completely lowered, open control valves (12) fully counterclockwise.

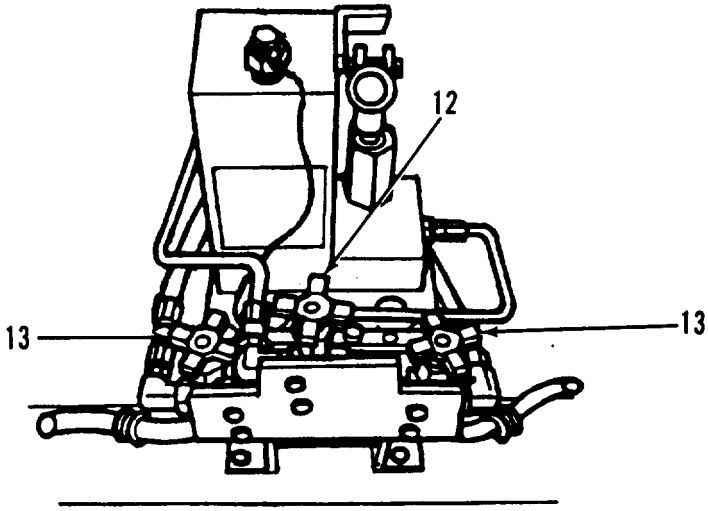

2-18. DETACHING DOLLY SET FROM SHELTER.

a. M689.

WARNING

When raising drawbar to vertical position, exercise care and control. Failure to do so may result in damage to shelter and injury to personnel.

(1) Raise drawbar (3) and install qulck-release pin (1) In drawbar.

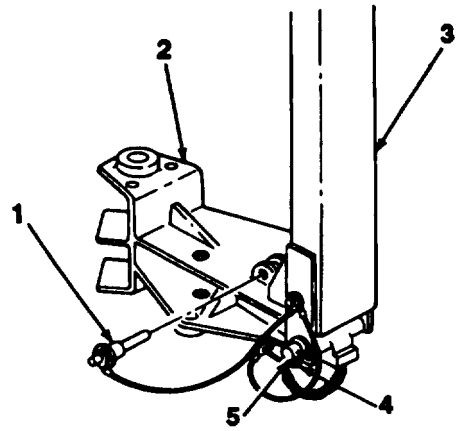

WARNING

When removing dolly set from shelter, apply downward pressure to drawbar as bolts are removed. Faliure to do so will allow dolly to drop to the ground resulting In possible Injury to personnel.

(2) Remove two bolts (8) from suspension bar (7) of front dolly (2).

(3) Using drawbar (3) as lever, detach front dolly (2) from shatter (8).

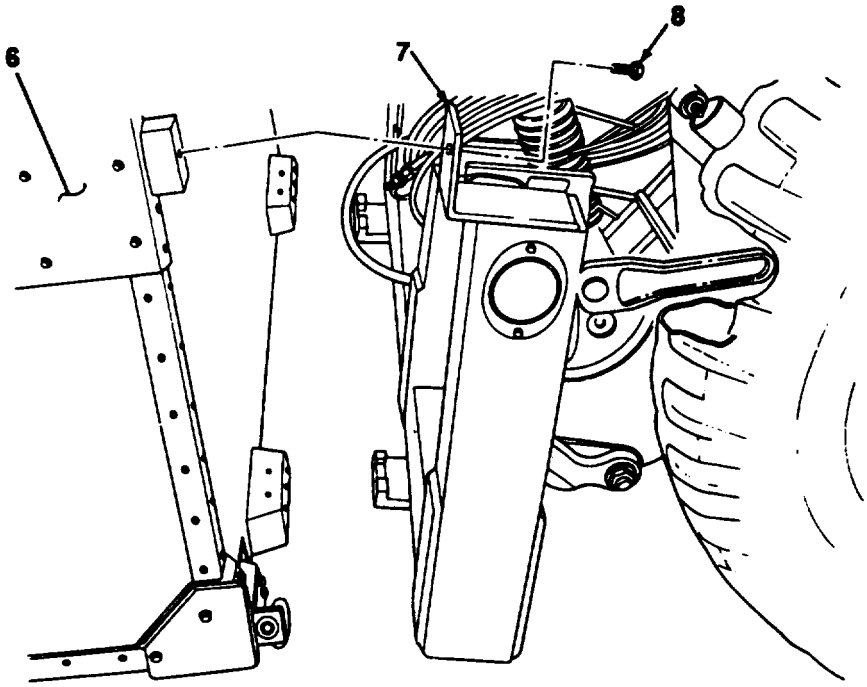

(4) Remove quick-release pin (1) and lower drawbar (3) to ground.

(5) Remove safety pin (5), pin (4), and drawbar (3) from front dolly (2).

2-18. DETACHING DOLLY SET FROM SHELTER (Con't).

(6) Install drawbar (3) on rear dolly (9) with pin (4). Install safety pin (5).

(7) Raise drawbar(3) and install quick-release pin(l).

(8) Remove two bolts (8) from suspension bar (7) of rear dolly (9).

(9) Using drawbar (3) as lever, detach rear dolly (9) from shelter (6).

(lo) Apply handbrakes (para 2-2).

(11) Remove quick-release pin (1), and lower drawbar (3) to ground.

(12) Remove safety pin (5), pin (4), and drawbar (3) from rear dolly (9).

(13) Install drawbar (3) on front dolly (2) with pin (4). Install safety pin (5).

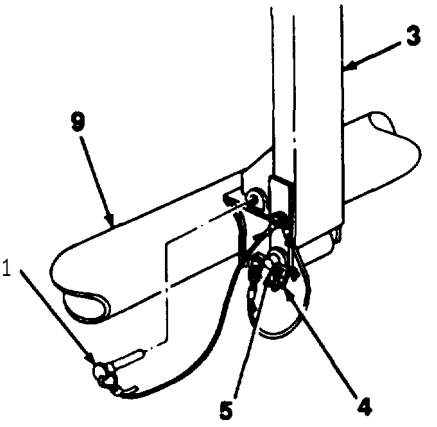

b. M832 (Except SN J089-001 thru 159 and J017-160 thru 350) and M840.

WARNING

When raising drawbar to vertical position, exercise care and control. Failure to do so may result In damage to shelter and injury to personnel.

(1) Raise drawbar (3) and install quick-release pin (1) in drawbar.

WARNING

When removing dolly set from shelter, apply downward pressure to drawbar and positionlng lever as bolts are removed. Failure to do so will allow dolly to drop to the ground, resulting In possible injury to personnel.

(2) Remove two bolts (8) from suspension bar (7) of front dolly (2).

(3) Using drawbar (3) as lever, detach front dolly (2) from shelter (6).

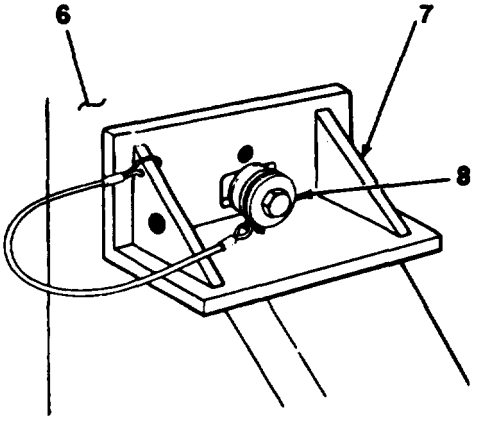

2-18. DETACHING DOLLY SET FROM SHELTER (Con't).

NOTE

Perform steps 4 through 8 to attach positioning bar to rear *dolly.*

(4) Remove pin (10) from positioning bar (11) at rear of *rear dolly* (9),

(a Collapse length of positioning bar (11) and remove from rear dolly (9).

(8) Extend length of positioning bar (11) and install pin (10) through crosshole.

m Install positioning bar (11) to tube(12) at center of rear dolly (9).

(8) Rotate positioning bar (11) to lock firmly In place.

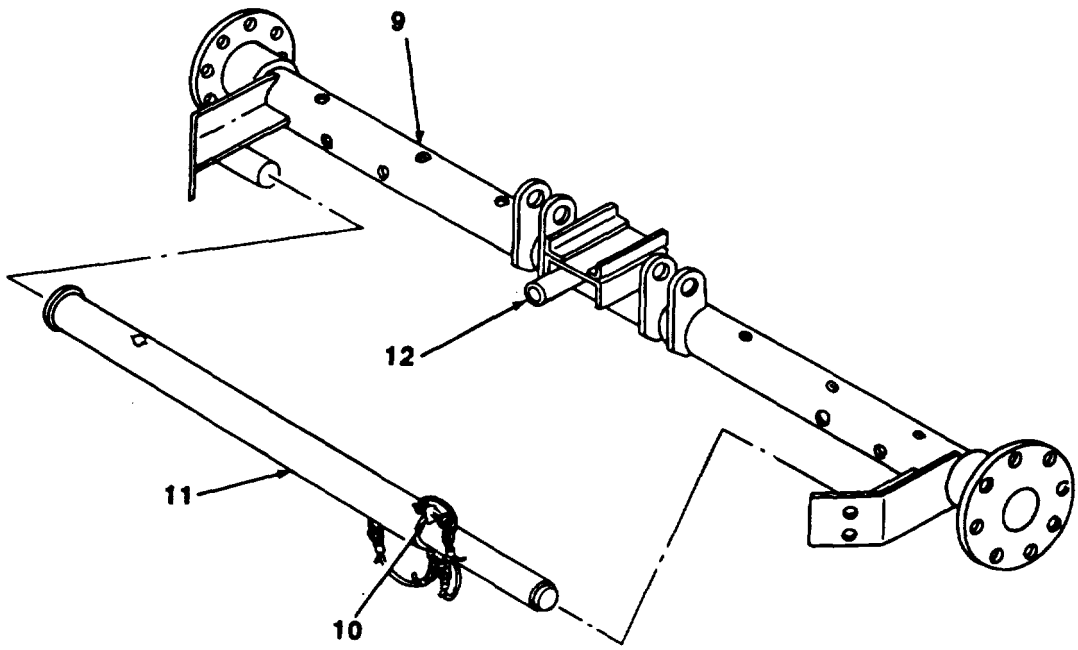

(9) Release handbrakes (para 2-2).

(10) Remove two bolts (8) from suspension bar (7) of rear dolly (9).

(11) Using positioning bar (11) as lever, detach rear dolly (9) from shelter (8).

(12) Apply handbrakes (para 2-2).

(13) Replace positioning bar (11).

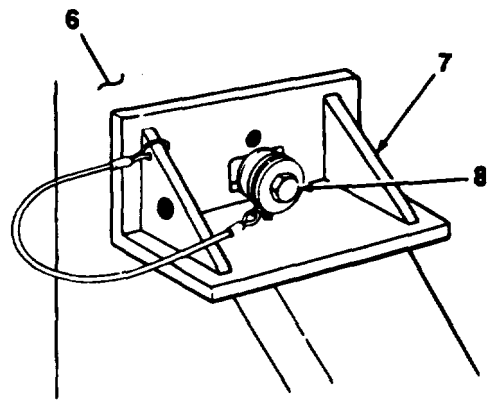

2-18. DETACHING DOLLY SET FROM SHELTER (Con't).

c. **M832 (SN J089-001 thru 159 and J017-160 thru 350 only).**

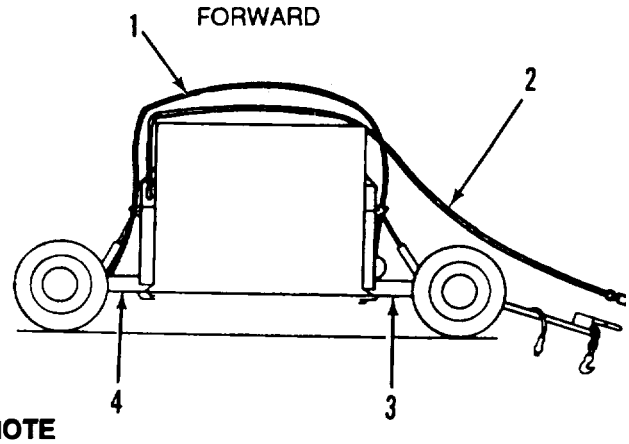

NOTE

Make sure handbrakes are engaged.

(1) Disconnect power cable (2) and two air hoses (1) from rear dolly (4) and stow on front dolly (3).

(2) Rotate bearing post (6) on each caster (5) counterclockwise to loosen caster wheel (9) from suspension bar (10). Remove two casters (5) from stowage by lifting bottom of caster bracket (8) and removing pin (7).

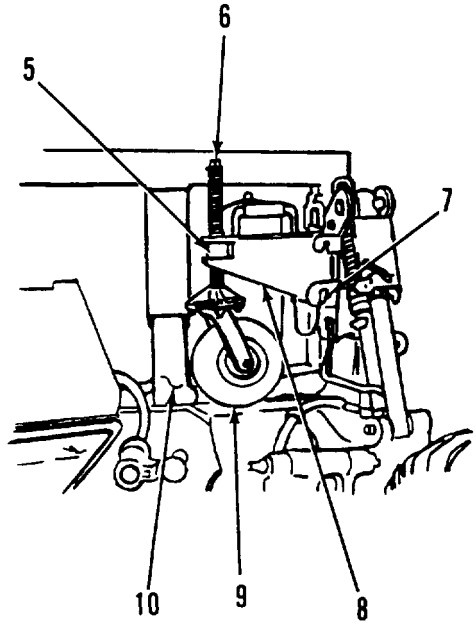

NOTE

Steps 3 through 7arethe same for the front and rear dollies.

(3) Install two casters (5) on dolly by placing pins (11) in upper mounting block (12) and rotating downward into lower mounting block (13). Insert pin (7).

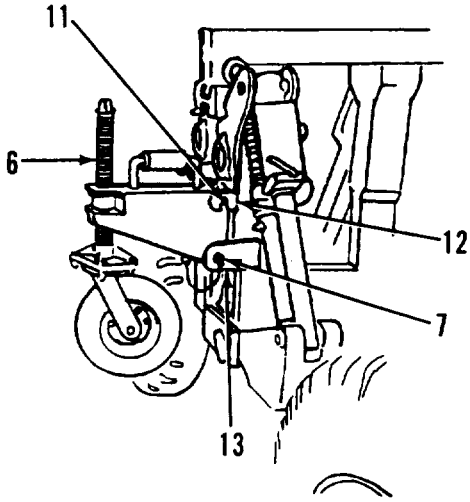

2-18. DETACHING DOLLY SET FROM SHELTER (Con't).

(4) Lower casters (5) by turning bearing posts (6) clockwise to relieve pressure on securing bolts (16).

(5) Install lanyard on front dolly (3) to support suspension bar (10).

(6) Remove bolts (16) from adapter bracket (15) and shelter bracket.

(7) Raise two casters (5) by turning each bearing post (6) counterclockwise, disengaging lifting lips from shelter bracket.

(8) Move front dolly (3) away from shelter (14). Release handbrakes on rear dollv (4) and move rear dolly away from shelter (14).

(9) Couple front and rear dollies (para 2-19b).

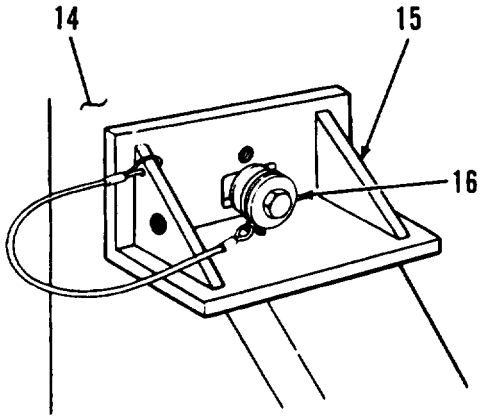

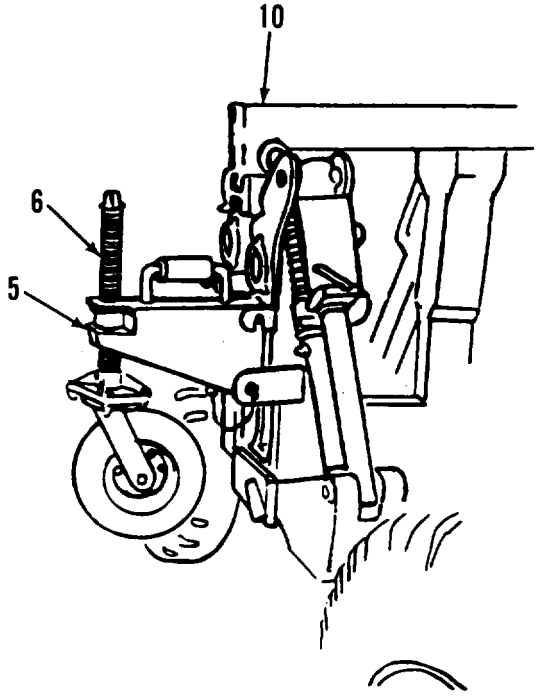

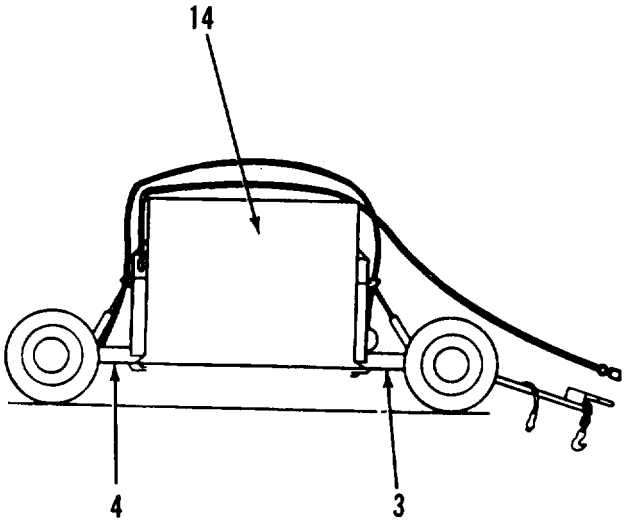

2-19. COUPLING FRONT AND REAR DOLLIES.

a. M689.

(1) Position front dolly (5) against rear dolly (4) so that two suspension bars (2) and four mounting tongues (6) are alined.

(2) Connect front and rear dollies (5 and 4) using two coupling clamps (8) and bolts (7) on four mounting tongues (6).

(3) Connect suspension bars (2) using two retaining blocks (3) and four bolts (1).

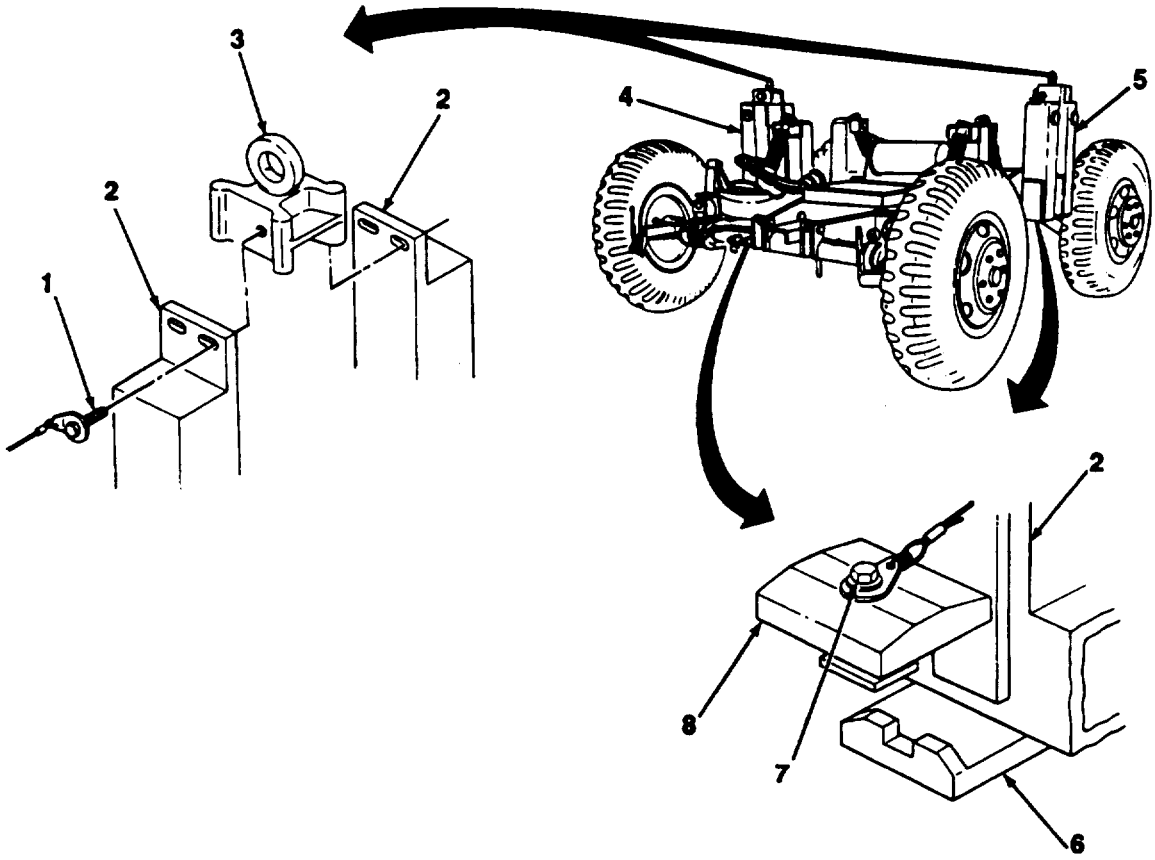

2-19. COUPLING FRONT AND REAR DOLLIES (Con't).

(4) Using four persons, Operate four lifting-leveling jack handles (9) clockwise, at the same time, until both suspension bars (2) are fully raised and mechanical stops are reached.

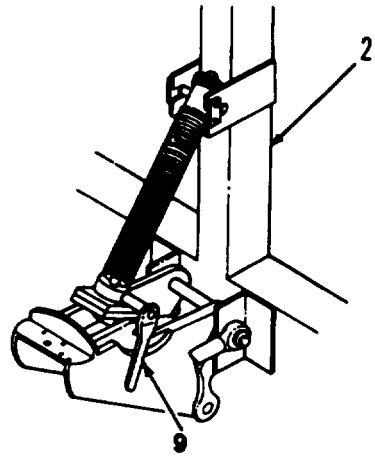

(5) Connect intervehicular cable (10) to distribution box (11) of rear dolly (4).

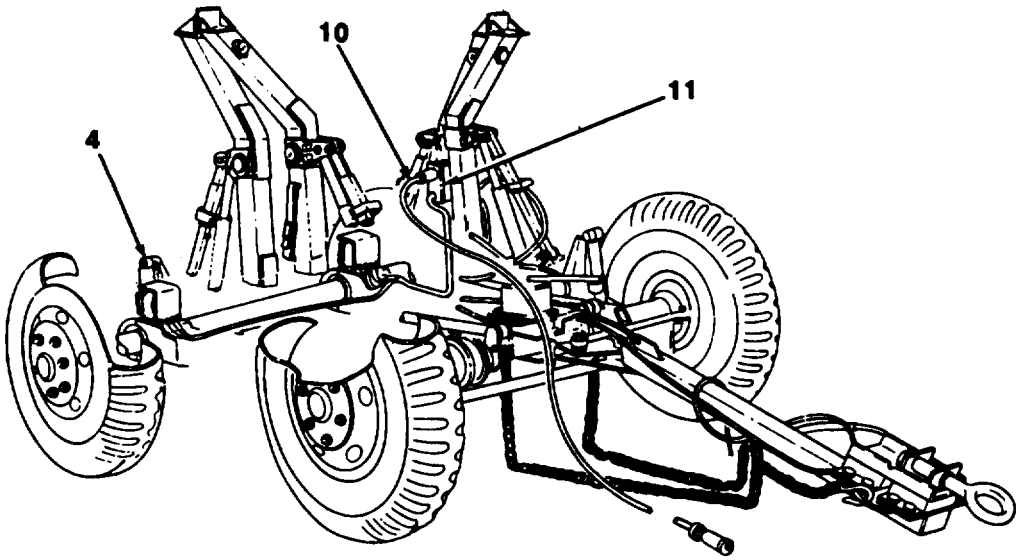

2-19. COUPLING FRONT AND REAR DOLLIES (Con't).

(6) Connect air hose quick disconnect connector (12) to power cluster (13) of rear dolly (4)

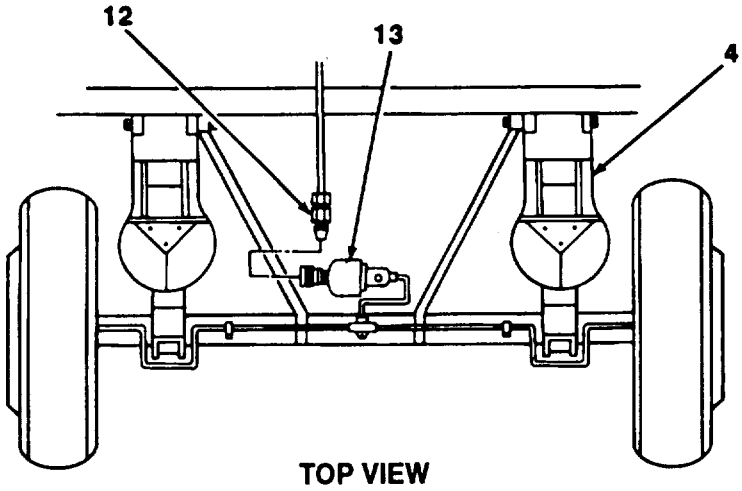

b. M832 and M840.

NOTE

- This task requires two persons.
- Only the M832 (SN J0894-101 thru 159 and JO17-160 thru 350) has the two dolly casters. Skip steps 1 and 2 if working on any other dolly set model.

(1) If two casters (1) are in stowed position, rotate post counterclockwise to loosen caster wheel, and remove casters (1) from stowed position by lifting bottom of caster bracket (3) and removing pin (2).

(2) Install both casters (1) on rear dolly (7) by placing two pins (4) in upper mounting block (5) and rotating downward into lower mounting block (6). Insert pin (2).

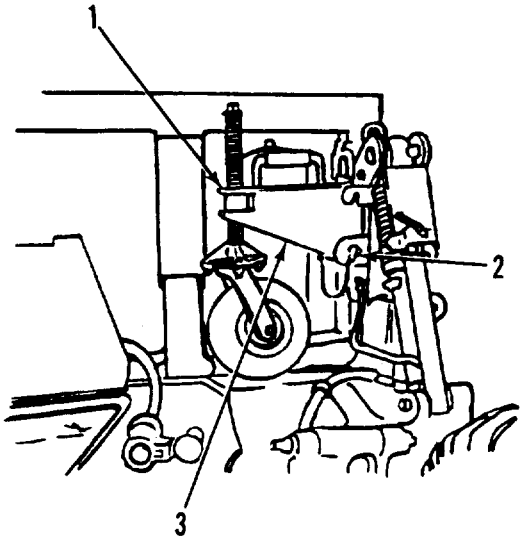

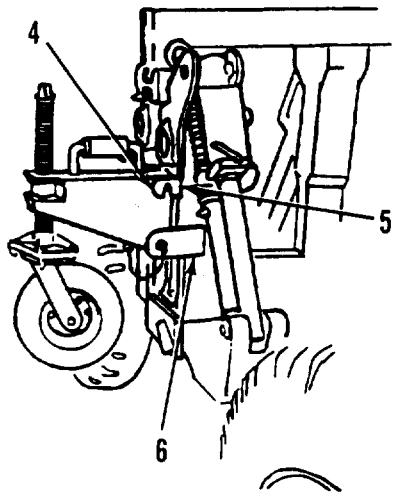

2-19. COUPLING FRONT AND REAR DOLLIES (Con't).

(3) Position rear dolly (7) so that its mounting tongues (9) rest on coupling clamp nut (tee-block) (10).

(4) Apply handbrakes (para 2-2).

(5) For the M832 (SN J089-001 thru 159 and J017-160 thru 350 only), remove two casters (1) from rear dolly (7) and install on front dolly (8).

(6) Position front dolly (8) so that its mounting tongues (9) rest on nut [10). Make sure nut (10) is centered between both sets of mounting tongues (9).

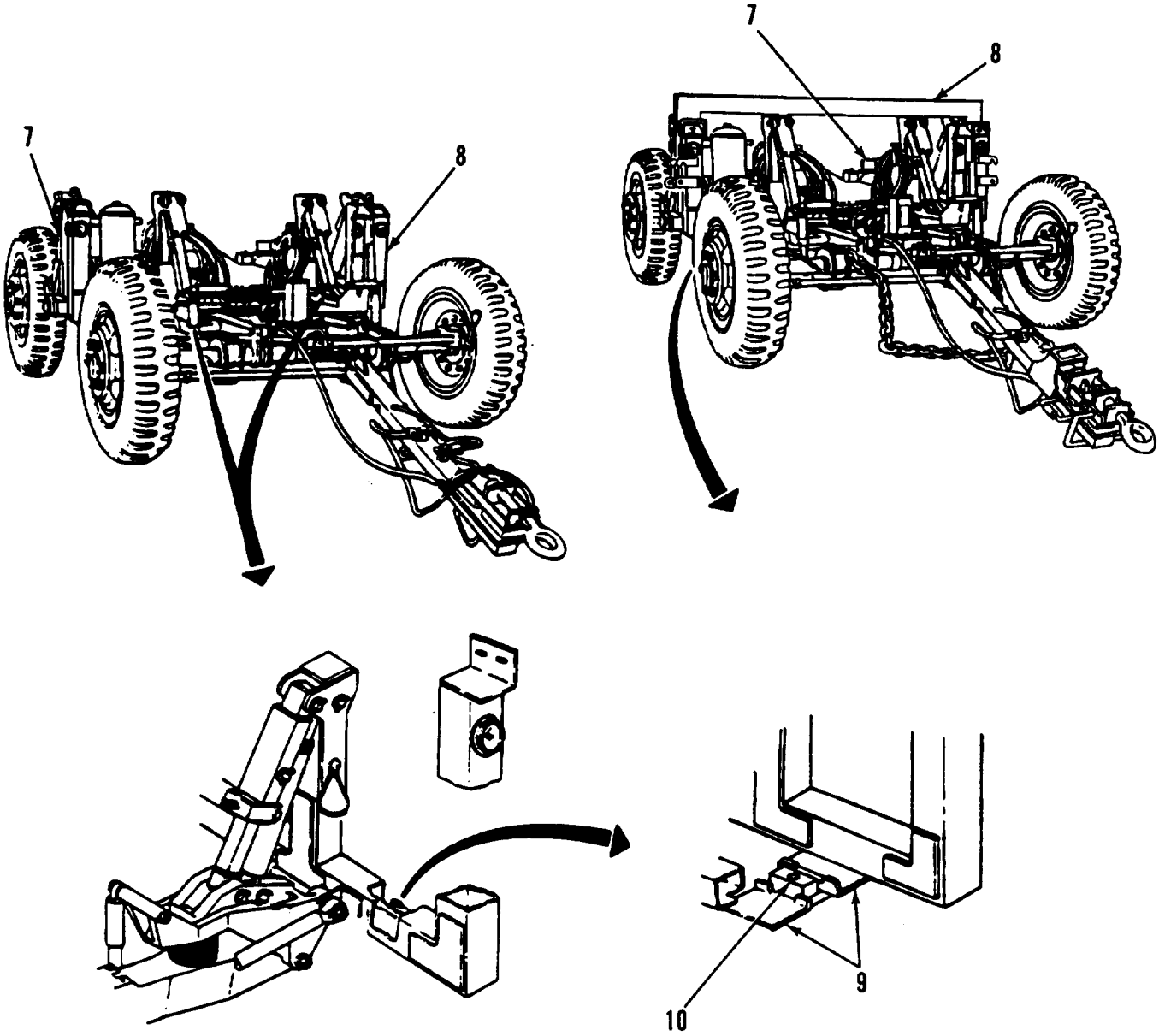

2-19. COUPLING FRONT AND REAR DOLLIES (Con't).

(7) Install two retaining blocks (13) on front suspension bar (14).

NOTE

For the M832 (SN J089-001 thru 159 and JO17-160thru 350 only), raise or lower casters (1) to help aline holes In the suspension bars (12 and 14) and the retaining blocks (13).

(8) For each side, place coupling clamp (18) over coupling damp nut (tee-block) (17) and lifting lips (16) on suspension bars (15). Insert bolt (20) and lock washer (19) through clamp (18), threadingit into nut (17). Tighten bolt (20).

(9) For each side, insert retaining block (13) between suspension bars (12 and 14) and install bolt (11).

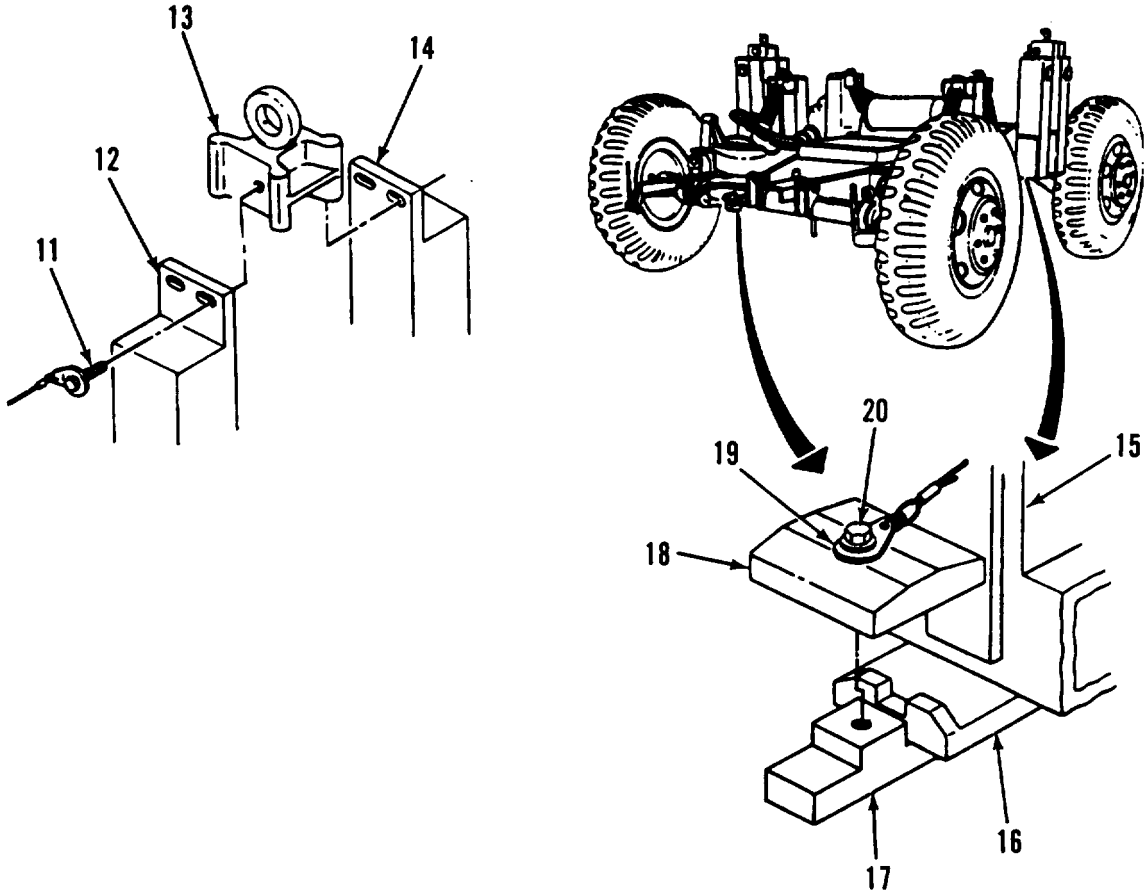

NOTE

For the M832 SN J089-001 thru 159 and J017-160 thru 350, follow steps 10 thru 15 and skip steps 16 thru 21. For any other models, skip steps 10 thru 15.

2-19. COUPLING FRONT AND REAR DOLLIES (Con't).

(10) Open four leveling valves (21) by rotating counterclockwise, and close two control valves (22) by rotating clockwise.

(11) Disconnect lanyards (27) from pins (28) on front and rear dollies.

(12) Insert extension handle (23) into pump (24) and operate pumps on both dolly halves until all four support struts (25) are fully extended. Regulate pumping to raise shelter ends together.

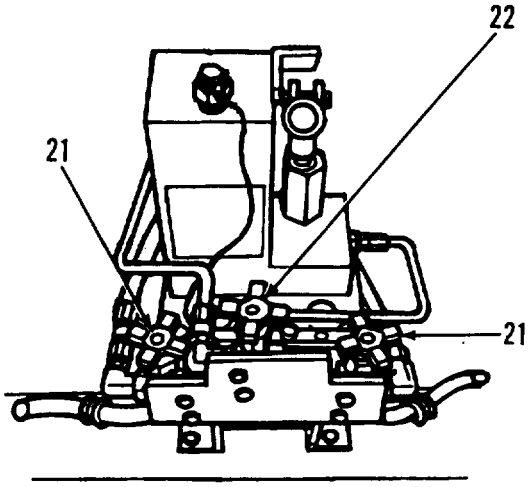

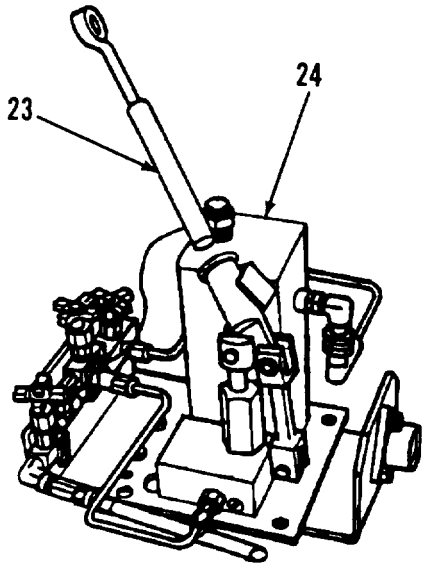

(13) Rotate four support strut clamp assemblies (26) upward and tighten until secure.

(14) Make sure coupling clamps (18) are fully seated, and tighten bolt (20) on each coupling clamp (18).

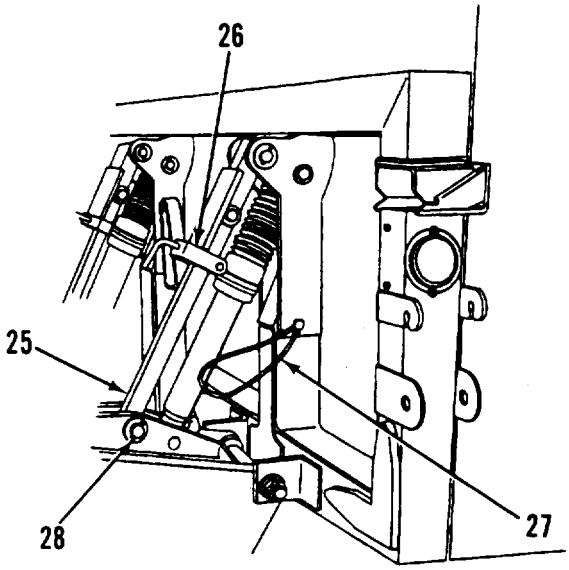

2-19. COUPLING FRONT AND REAR DOLLIES (Con't).

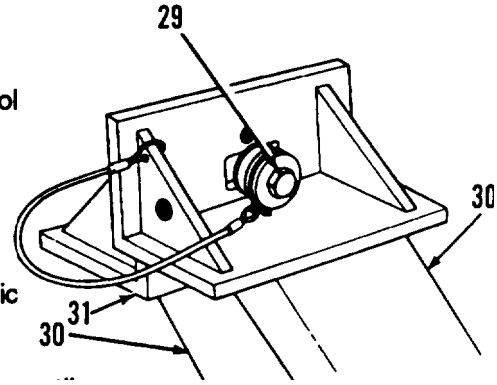

(15) Open two control valves (22) by rotating counterclockwise, and close four leveling valves (21) by rotating clockwise. Close control valves (22).

(16) For the M840, lock together mounting tongues (31) on suspension bars (30) and install two bolts (29).

(17) Rotate release valve lever (32) at front of each hydraulic pump (33) to PUMP position.

(18) Using two personnel, operate both hydraulic pumps (33) until dollies are fully raised and four support struts (25) are fully extended.

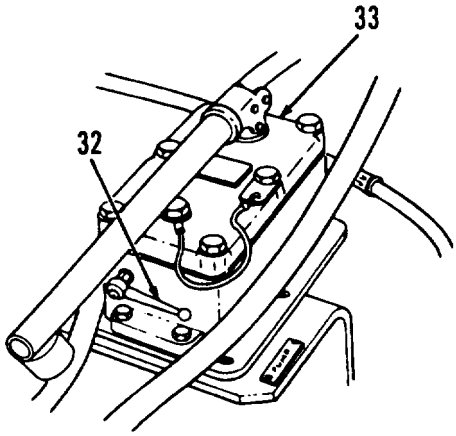

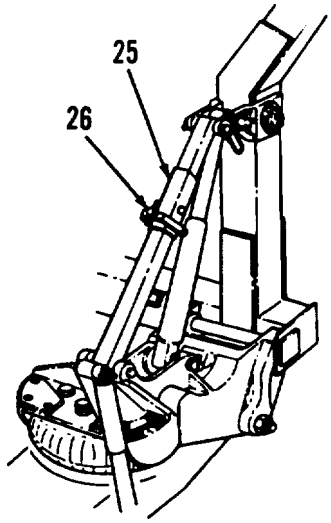

(19) Tighten four support strut clamp assemblies (26).

(20) Rotate release valve levers (32) to RELEASE position.

(21) Rotate four lifting-leveling jack valves (34) clockwise to close valves.

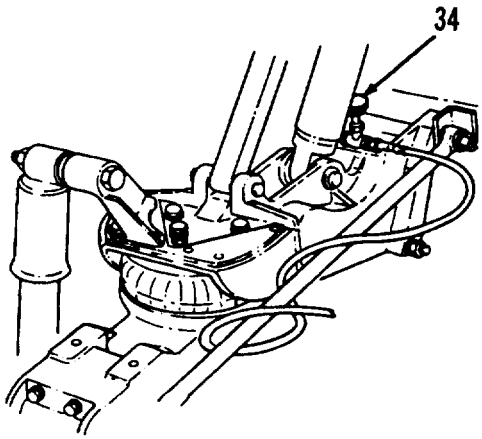

2-19. COUPLING FRONT AND REAR DOLLIES (Con't).

(22) Connect intervehicular cable (35) to distribution box (36) of rear dolly (7).

(23) Connect air hose quick-disconnect connector (37) to power cluster (38) of rear dolly (7).

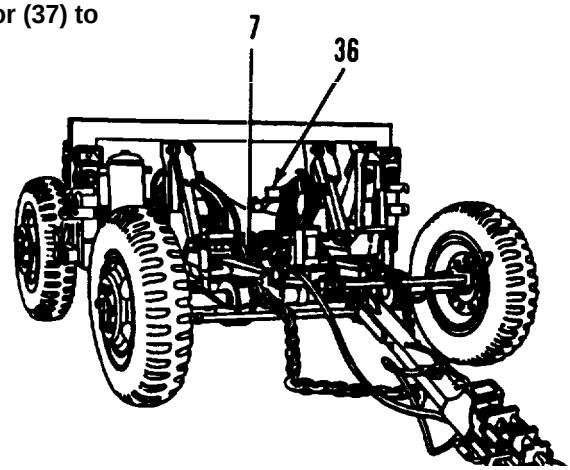

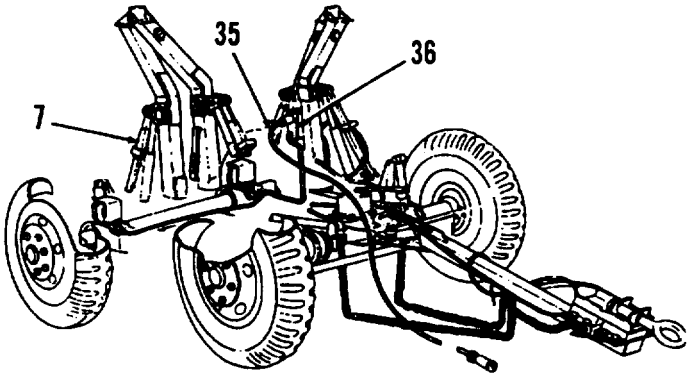

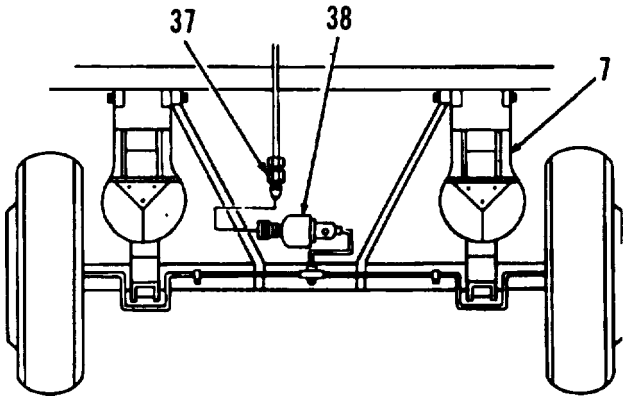

2-20. TOWING DOLLY SET WITHOUT SHELTER.

a. When preparing dolly set to be towed without a shelter, refer to paragraph 2-14. Follow steps d through k. Coil excess length of air hose and intervehicular cable and stow on front dolly. Secure with tiedown straps.

WARNING

Do not exceed 30 mph (46 kph) when towing dolly set without a load.

b. For towing dolly set cross-country or on highway, refer to FM 21-305.

Section IV. OPERATION UNDER UNUSUAL CONDITIONS

Paragraph Title	Page Number
Fording	2-54
General	2-53
Operation in Extreme Cold	2-53
Operation in Extreme Heat	2-53
Operation in Mud	2-53
Operation in Saltwater Areas	2-54
Operation in Sandy or Dusty Areas	2-54
Operation in Snow	2-54

2-21. GENERAL

This section contains instructions for safely operating the dolly set under unusual conditions. In addition to normal preventive maintenance services, special care must be taken to keep the dolly set operational in extreme temperatures and humidity.

2-22. OPERATION IN EXTREME COLD.

a. Special care must be taken when operating dolly sets in cold weather. Refer to FM 9-207 for operation and maintenance of ordnance material in cold weather. Also refer to FM 21-305, which is a manual for the wheeled-vehicle driver.

b. Refer to Chaper 3, Section I, for proper lubrication during extreme cold weather.

c. Care must be taken when handling electrical cables. Extreme cold weather can cause insulation material on electrical wire to crock, causing short circuits. Construction materiel may become hard, brittle, and easily damaged or broken.

d. When parking for any period of time in temperatures below O°F (-18°C), park in a sheltered area out of the wind and clean off any buildup of ice or snow. Place footing of planks or brush under tires to prevent them from freezing to ground. Make sure tires are properly inflated (para 1-10). Under inflated tires will freeze, resulting in flat Spots.

2-23. OPERATION IN EXTREME HEAT.

a. Refer to Chapter 3, Section I, for proper lubrication during extreme heat conditions.

b. Do not park dolly set in sunlight for long periods of time. Heat and sunlight shorten tire lie.

c. Shelter or cover dolly set with canvas, if available.

d. When humid, frequently inspect, clean, and lubricate to prevent rapid rusting and growth of fungi.

2-24. OPERATION IN MUD.

Immediately after operation in mud, thoroughly clean, inspect, and lubricate if tactical situation permits (Chapter 3, Section I).

b. Pack wheel bearings as required (Chapter 3, Section I).

2-25. OPERATION IN SALTWATER AREAS.

Clean, inspect, and lubricate dolly set more often when operating in saltwater areas (Chapter 3, Section I).

2-26. OPERATION IN SANDY OR DUSTY AREAS.

Clean, inspect, and lubricate dolly set more often when operating in sandy or dusty areas (Chapter 3, Section I).

b. Maintain proper tire pressure:

(1) Reduce tire pressure to 25 psi (172 kPa) for operation on soft sand.

(2) Return tire pressure to 50psi (345 kPa) when operation resumeson hard-surface roads, if tactical situation permits.

2-27. OPERATION IN SNOW.

a. Refer to FM 21-305 for special instructions on driving hazards in snow.

b. Reduce tire pressure to 24 psi (172 kPa).

2-28. FORDING.

a. Fording depth of the dolly set is limited to the fording depth limit of the trailer's shelter.

b. As soon as tactical situation permits, perform the following services

Saltwater immersion greatly increases rusting corrosion, especially on unpainted surfaces. Remove all traces of saltwater and salt deposits from all areas of the dolly set. Apply lubricating oil (Item 8, Appendix E). Notify Unit maintenance that complete disassembly and assembly may be needed.

· If vehicle was required to ford water that covered the wheel hubs, have Unit maintenance check, clean, and lubricate wheel bearings in accordance with the lubrication order.

CHAPTER 3
OPERATOR MAINTENANCE

Section I. LUBRICATION INSTRUCTIONS

Paragraph Title	Page Number
General	3-1
Lubrication Chart	3-2
Specific Lubrication Instructions	3-1

3-1. GENERAL

NOTE

These instructions are MANDATORY.

a. The dolly set must receive lubrication with approved lubricants at recommended intervals in order to be mission-ready at ail times.

b. The Key (p. 3-4) lists lubricants to be used in all temperature ranges and shows the intervals.

c. The Lubrication Chart (p. 3-2) shows lubrication points, items to be lubricated, the required lubricant, and recommended intervals for lubrication. Any special lubricating instructions required for specifi components are contained in the NOTES section (p. 3-4) of the chart.

d. Recommended intervals are based on normal conditions of operation, temperature, and humidity. When operating under extreme conditions, lubricants should always be changed more frequently than usual. When in doubt, notify your supervisor.

3-2. SPECIFIC LUBRICATION INSTRUCTIONS.

a. Keep all lubricants in a closed container and store in a clean, dry place away from extreme heat. Keep container covers clean and do not allow dust, dirt, or other foreign material to mix with lubricants. Keep lubrication equipment clean and ready for use.

b. Maintain a record of lubrication performed and report any problems noted during lubrication. Refer to DA Pam 738-750 for maintenance forms and procedures for recording and reporting any findings.

WARNING

Wipe excess lubricant from the brakeshoe linings area, to prevent grease from soaking the linings. If brakeshoe linings do become soaked, have Unit maintenance replace them. Failure to follow this warning may cause brakes to malfunction, resulting in serious injury or death to personnel.

c. Keep all external parts of equipment not requiring lubrication free of lubricants. After lubrication, wipe off excess oil or gre`ase to prevent accumulation of foreign matter.

d. Refer to FM 9-207 for lubrication instructions in cold weather.

After operation in mud or in sandy or dusty renditions, clean and inspect all points of lubrication for fouled lubricants. Change lubricants as required.

LUBRICATION CHART

DOLLY SET, LIFT, TRANSPORTABLE SHELTER:

M689 (NSN 2330-00-226-6076)

DOLLY SET, LIFT, TRANSPORTABLE SHELTER:

M832 (NSN 2330-00-221-4939)

DOLLY SET, LIFT, TRANSPORTABLE SHELTER:

M840 (NSN 2330-00-937-1 175)

Intervals (on-condition or hard time) and related man-hour times are based on normal operation. The man-hour time specified is the time you need to do all services prescribed for a particular interval. Decrease the intervals if your lubricants are contaminated, or if you are operating equipment under adverse conditions, including longer than usual operating hours. The intervals may be extended during periods of low activity. If extended, adequate preservation precautions must be taken.

Dotted leader lines indicate that lubrication is required on both sides of the equipment.

WARNING

- Dry cleaning solvent, P-D-680, is toxic and flammable. Always wear protective goggles and gioves, and use only in a well-ventilated area. Avoid contact with skin, eyes, and clothes, and DO NOT breaths vapors. DO NOT use near open flame or excessive heat. The solvent's flash point is 100°F-138°F (38°C-59°C). If you become dizzy while using dry cleaning solvent, Immediately get fresh air and medical help. if solvent contacts your eyes, immediately wash them and get medical aid.

- Hydraulic fluid pressure is extremely high when adjusting hydraulic pump. All safety precautions must be taken when performing this operation. Wear protective clothing and use hand and eye protection. Failure to follow this warning may result in injury or death to personnel.

Clean all fittings and area around lubrication points with dry cleaning solvent (item 14, Appendix E) or equivalent before lubricating equipment. After lubrication, wipe off excess oil or grease to prevent accumulation of foreign matter.

The lowest level of maintenance authorized to lubncate a point is indicated in parentheses by (C) for Operator/Crew or (0) for Unit maintenance.

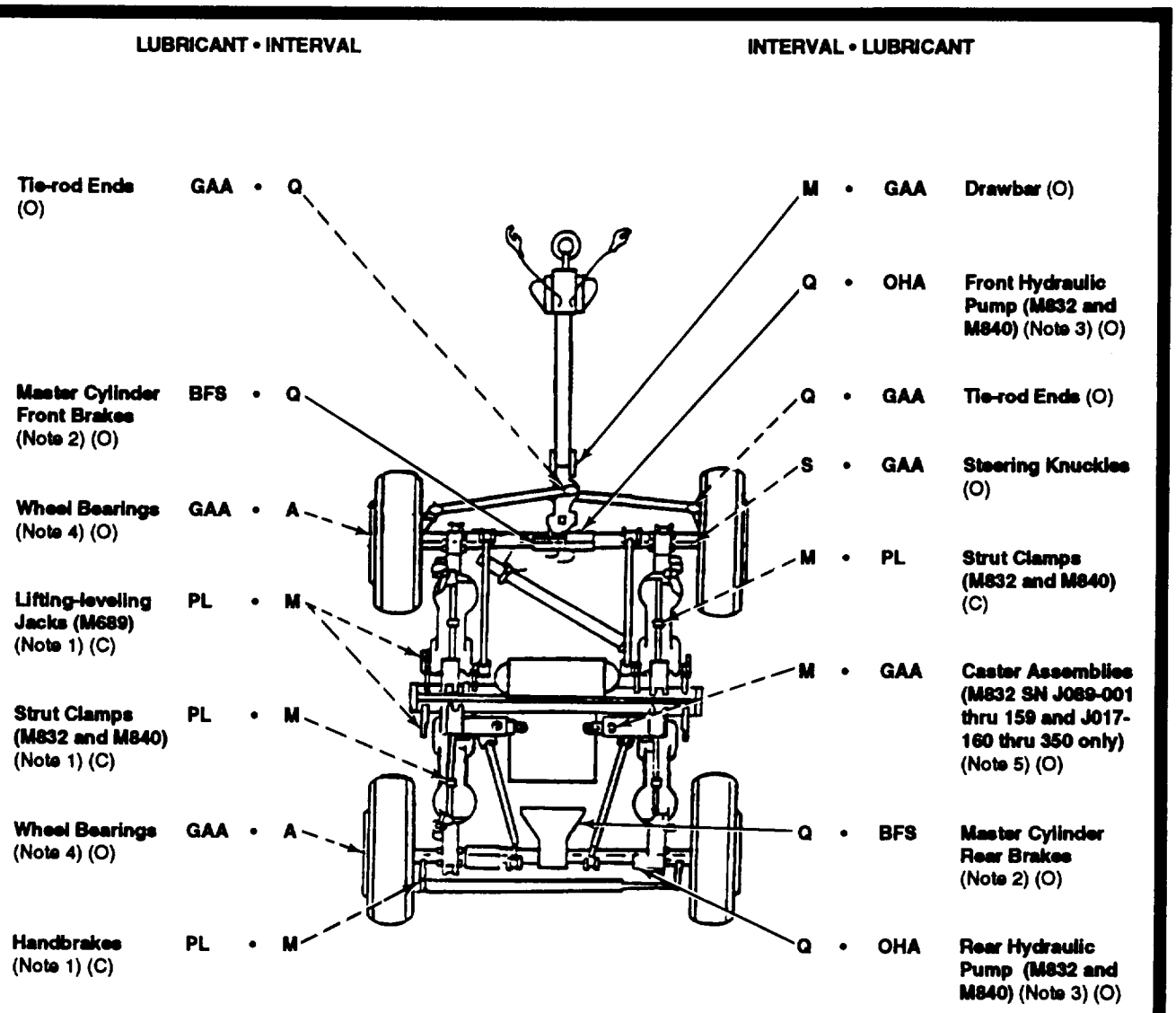

TOTAL MAN-HOURS*

INTERVAL	MAN-HOURS
M	1.5
Q	1.0
S	2.0
A	4.0

*The man-hour time specified is the time you need to do all services prescribed for a particular interval.

- KEY -

LUBRICANTS	EXPECTED TEMPERATURES				INTERVALS
	ABOVE + 32°F (ABOVE O°C)	+40°F to -10°F (+4°C to -23°C)	O°F to -65°F (-18°C to -54°C)	FOR ARCTIC OPERATIONS, REFER TO FM 9-207	
PL-M (MIL-L-3150) Lubricating Oil, General Purpose	PL-M				M - Monthly Q - Quarterly S - Semiannual A - Annual
PL-S (VV-L-800) Lubricating Oil, General Purpose, Preservative		PL-S	PL-S		
OHA (MIL-H-5606) Fluid, Hydraulic, Petroleum Base	All Temperatures				
BFS (MIL-B-46176) Brake Fluid, Silicone, Automotive	All Temperatures				
GAA (MIL-G-10924) Grease, Automotive and Artillery	All Temperatures				

NOTES:

1. OIL CAN POINTS. Monthly, lubricate linkage pins, clevises, and all exposed adjusting threads with PL.

2. MASTER CYLINDERS. Quarterly, check fluid level. Add brake fluid to within 3/8 to 1/2 in. (9.53 to 12.70 mm) below top of reservoir.

3. HYDRAULIC PUMPS. Monthly, check fluid level. Add hydraulic fluid if necessary.

M832 *(Except SN* J089-001 *thru 159 and JO17- 160 thru 350):* Fill with hydraulic fluid until level is 3/8 to 1/2 in. (9.53 to 12.70 mm) below top of reservoir with lifting-leveling jacks fully extended and locked.

M832 (SN J089-001 *thru 159 andJO17- 160 thru 350): Fill* with hydraulic fluid until fluid level is 3 to 3-1/2 in. (76.20 to 88.90 mm) from the top of hydraulic pump fluid reservoir with support struts fully extended and locked.

M840: Fill with hydraulic fluid until fluid level reaches low mark of dipstick with lifting-leveling jacks extended.

4, WHEEL BEARINGS. Every 12 months remove, clean, and pack with GAA. Refer toTM 9-214, Inpection, Care, *and Maintenance of Antifriction Bearings.* After fording operations, check, clean, and lubricate wheel bearings if water covered the wheel hubs.

5. CASTER ASSEMBLIES. Monthly, with casters in operating position, coat height-adjusting rod with grease and lubricate three fittings. Rotate height-adjusting rod through its entire range of travel.

SECTION II. OPERATOR/CREW TROUBLESHOOTING

3-3. GENERAL.

NOTE

Before doing any troubleshooting, make sure you have performed all the preventive maintenance checks and services (PMCS) that address the problem area or system.

a. This section contains troubleshooting information for locating and correcting the troubles that may develop when operating the dolly set(s). The Operator/Crew Troubleshooting Fault Symptom Index follows these general instructions, as listed at the beginning of Section II. Fault symptoms are listed by SYSTEM, FAULT NUMBER, and FAULT SYMPTOM. Under FAULT SYMPTOM you will find a brief description, such as "Dim or Flickering Lights," or a brief description, followed by additional, specific information, such as, "Brakes Do Not Apply/Weak Brakes, Grabbing or Uneven Braking Action."

b. Each malfunction for a component or system is followed by an Initial Setup block that lists tools, supplies, or additional personnel needed, plus a list of equipment conditions. The equipment conditions list tells you things you need to& before performing the actual troubleshooting procedure.

c. Before preforming any troubleshooting, you are required to review the warning summary pages in the front of this manual and heed all warnings related to the area you are going to work on. In addition to the warnings on the summary pages, other WARNING, CAUTION, and NOTE entries may follow the Initial Setup block; these entries precede the step to which they apply and are to be considered part of the task.

d. The Initial Setup block is followed by a list of checks (tests or inspections), in the form of a branching logic tree that will help you determine corrective actions to take.

e. Before starting t he procedure as written, do a brief but thorough inspection of the system/subsysterns you are dealing with. Look for obvious damage or indications of problems, such as burned or charred wires or paint, broken wires, or loose or missing hardware. Next, starting with the first block, step A, perform the checks in the order given, then answer the question that follows with either "YES" or "NO." Follow the YES or NO path to the next block, and soon, until the problem is either fixed or referred to Unit maintenance for correction. Follow-on maintenance is listed at the end of the task, if needed, A fault is considered corrected only when the end item has been repaired and is returned to a fully mission-capable condition.

f. This manual cannot list all malfunctions that may occur, nor all possible tests, inspections, or corrective actions. If a malfunction is not listed or is not corrected using the information given, notify Unit maintenance and/or your supervisor.

SECTION II. OPERATOR/CREW TROUBLESHOOTING (con't)

3-4. TROUBLESHOOTING FAULT SYMPTOM INDEX

SYSTEM	FAULT NUMBER	FAULT SYMPTOM	PAGE NUMBER
BRAKE	1	Brakes Do Not Apply/Weak Brakes, Grabbing or Uneven Brake Action	3-7
	2	Brakes Slow To Release/Do Not Release	3-9
	3	Dolly Set Will Not Lift or Lower	3-10
	4	Handbrake Lever Difficult To Apply/Will Not Apply	3-11
ELECTRICAL	5	Blackout and/or Service Stoplights and/or Taillights Are Inoperative	3-12
	6	Dim or Flickering Lights	3-13
HYDRAULIC CYLINDERS	7	Pump Will Not Supply or Maintain Pressure	3-14
	8	Pump Functions, Hydraulic Cylinders Will Not Extend	3-15
STEERING	9	Dolly Wanders or Pulls to One Side	3-16
SUSPENSION	10	Tires Show Abnormal Wear or Wheels Shimmy	3-18
	11	Dolly Leans to One Side	3-19

Table 3-1. Operator/Crew Troubleshooting Chart.

BRAKE SYSTEM.	1. BRAKES DO NOT APPLY/WEAK BRAKES, GRABBING OR UNEVEN BRAKE ACTION.

Initial Setup:

Equipment Conditions:
- dolly set parked on level surface.
- Dolly set coupled to towing vehicle with towing vehicle parking broke applied (para 2-14).

A. Inspect brake lines for leaking brake fluid (Table 2-1).

ARE ANY LEAKS PRESENT?

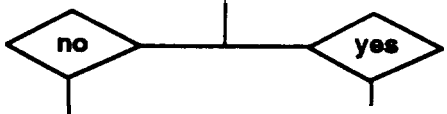

Notify Unit maintenance.

B. Inspect intervehicular air hoses for proper connections with towing vehicle per applicable technical manual.

ARE AIR HOSES CONNECTED PROPERLY?

Correct deficiencies per applicable technical manual.

C. Check position of air reservoir draincock.

IS DRAINCOCK OPEN?

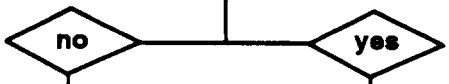

Go to step D.

Close air reservoir draincock.

Continued on next page

Table 3-1. Operator/Crew Troubleshooting Chart (con't).

BRAKE SYSTEM (con't).	1. BRAKES DO NOT APPLY/WEAK BRAKES, GRABBING OR UNEVEN BRAKE ACTION (con't).

Continued from step C

D. Check towing vehicle air shutoff valves per applicable technical manual.

IS TOWING VEHICLE AIR SHUTOFF VALVE OPEN?

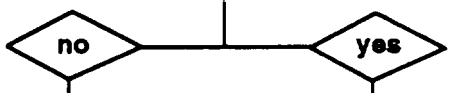

Open shutoff valve per applicable technical manual.

E. Check brake pressure gage in towing vehicle per applicable technical manual.

IS AIR PRESSURE LOW?

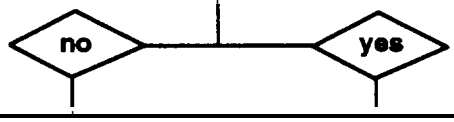

[Notify Unit maintenance. Notify Unit maintenance.

END OF TASK

Table 3-1. Operator/Crew Troubleshooting Chart (con't).

BRAKE SYSTEM (con't).	2. BRAKES SLOW TO RELEASE/DO NOT RELEASE

Initial Setup:

Equipment Conditions:
- Dolly set parked on level surface.
- Dolly set coupled to towing vehicle with towing vehicle parking brake applied (para 2-14).

A. Inspect brake lines for leaking brake fluid (Table 2-1).

ARE ANY LEAKS PRESENT?

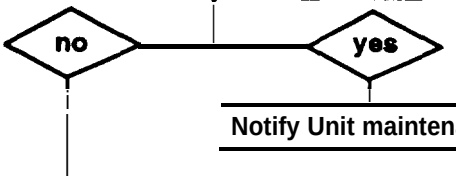

Notify Unit maintenance.

B. Check towing vehicle air shutoff valves per applicable technical manual.

IS TOWING VEHICLE SHUTOFF VALVE OPEN?

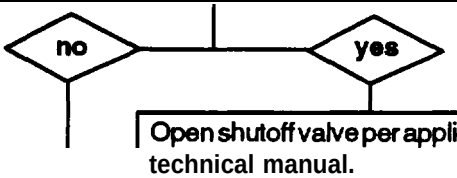

Open shutoff valve per applicable technical manual.

C. Check the position of air reservoir draincock.

IS AIR RESERVOIR DRAINCOCK OPEN?

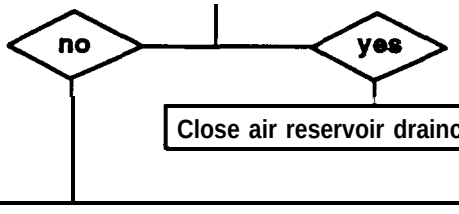

Close air reservoir draincock.

D. Check brake pressure gage in towing vehicle per applicable technical manual.

IS AIR PRESSURE LOW?

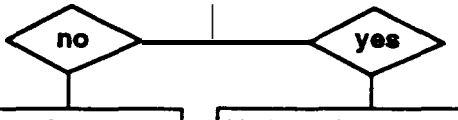

Notify Unit maintenance. | Notify Unit maintenance.

END OF TASK

Table 3-1. Operator/Crew Troubleshooting Chart (con't).

BRAKE SYSTEM (con't),	3. DOLLY SET WILL NOT LIFT OR LOWER

Initial Setup:

Equiprnent Conditions:
•Dolly set parked on level surface.

A. Make sure dolly set handbrakes are released.

ARE HANDBRAKES RELEASED?

I Release handbrakes (para 2-2). I

B. Make sure dolly set brakes are not locked.

I ARE DOLLY SET BRAKES LOCKED?

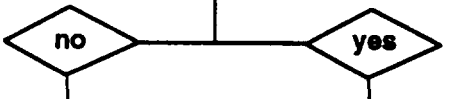

Notify Unit maintenance.

Open air reservoir draincock.

END OF TASK

Table 3-1. Operator/Crew Troubleshooting Chart (con't).

I BRAKE SYSTEM (con't).	4. HANDBRAKE LEVER DIFFICULT TO APPLY/WILL NOT APPLY.

Initial Setup:

Equipment Conditions:
- Dolly set parked on level surface.

Adjust handbrake cable with handbrake lever adjusting knob (para 3-5).

ARE HANDBRAKES WORKING NOW?

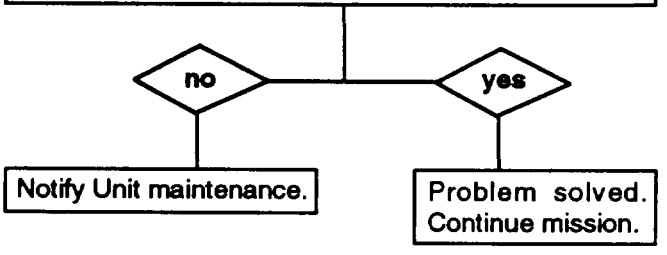

END OF TASK

Table 3-1. Operator/Crew Troubleshooting Chart (con't).

ELECTRICAL SYSTEM.	5. BLACKOUT AND/OR SERVICE STOPLIGHTS AND/OR TAILLIGHTS ARE INOPERATIVE

Initial Setup:

Equipment Conditions:
- Dolly set parked on level surface.
- Dolly set coupled to towing vehicle with towing vehicle parking broke applied (para 2-14).

A. Make sure towing vehicle light switch is set properly per applicable technical manual.

IS LIGHT SWITCH SET PROPERLY?

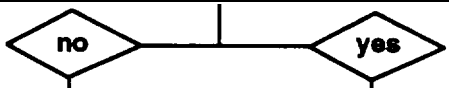

Set towing vehicle light switch per applicable technical manual.

B. Turn towing vehicle master switch OFF. Disconnect intervehicular cable (IVC) from tow vehicle per applicable technical manual and dolly set (para 2-16). Check for dirty, wet, corroded, or loose terminals in towing vehicle receptacle and IVC cable plug. Also check connection point between IVC cable and distribution box on rear dolly.

ARE TERMINALS IN GOOD CONDITION?

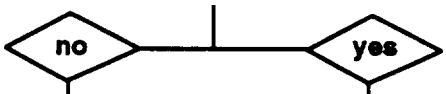

Notify Unit maintenance.

Notify Unit maintenance.

END OF TASK

Table 3-1. Operator/Crew Troubleshooting Chart (con't).

ELECTRICAL SYSTEM (con?).	6. DIM OR FLICKERING LIGHTS.

Initial Setup:

Equipment Conditions:
- Dolly set parked on level surface.
- Dolly set coupled to towing vehicle with towing vehicle parking brake applied (para 2-14).

A. Disconnect IVC cable from towing vehicle per applicabletechnical manual and dolly set (para 2-16). Check for ditty, wet, corroded, or loose terminals in towing vehicle receptacle and IVC cable plug. Also check connection point between IVC cable and distribution box on rear dolly.

ARE TERMINALS DIRTY OR CORRODED?

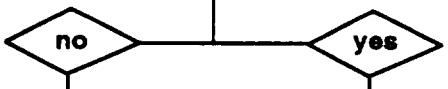

Notify Unit maintenance.

B. Inspect taillight wiring for loose connections between chassis wiring harness and taillight assemblies.

I ARE TAILLIGHT WIRING CONNECTIONS LOOSE? I

Notify Unit maintenance. I I Notify Unit maintenance.

END OF TASK

Table 3-1. Operator/Crew Troubleshooting Chart (con't).

HYDRAULIC CYLINDERS.	7. PUMP WILL NOT SUPPLY OR MAINTAIN PRESSURE

Initial Setup:

Equipment Conditions:
- Dolly set parked on level surface with handbrakes applied.

A. Check hydraulic pump assembly and hydraulic lines for fluid leaks (Table 2-1).

IS FLUID LEAKING?

no → B.

yes → Notify Unit maintenance.

B. Check to make sure all valves are set for lifting operations (para 2-12).

ARE VALVES IN PROPER POSITIONS?

no → On the M832 (SN J089-001 thru 159 and JO17-160 thru 350), open leveling valves and close control valve. On other models, open lifting-leveling valves and ctose release valve on pump assembly.

yes → Notify Unit maintenance.

END OF TASK

Table 3-1. Operator/Crew Troubleshooting Chart (con't).

HYDRAULIC CYLINDERS (con't).	8. PUMP FUNCTIONS, HYDRAULIC CYLINDERS WILL NOT EXTEND.

Initial Setup:

Equipment Conditions:
- Dolly set parked on level surface with handbrakes applied.

A. Check to make sure all valves are set for lifting operations (para 2-12).

ARE VALVES IN PROPER POSITIONS?

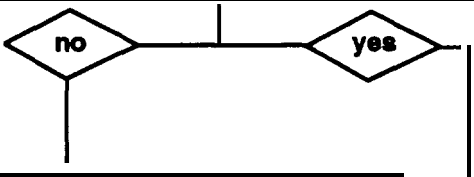

On the M832 (SN J089-001 thru 159 and JO1 7-160 thru 350), open leveling valves and close control valve. On other models, open lifting-leveling valves and close release valve on pump assembly.

B. Check hydraulic pump assembly and hydraulic lines for fluid leaks (Table 2-1).

ARE LEAKS PRESENT?

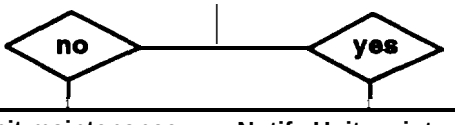

Notify Unit maintenance.	Notify Unit maintenance.

END OF TASK

Table 3-1. Operator/Crew Troubleshooting Chart (con't).

STEERING SYSTEM	9. DOLLY WANDERS OR PULLS TO ONE SIDE.

Initial Setup:

Equipment Conditions:
- Dolly set parked on level ground.

NOTE

Verify that safety wire is secured on upper and lower parts of steering knuckle. if safety wire is missing, notify Unit maintenance.

A. Inspect for unbalanced or incorrectly mounted payload and make sure struts are locked in place (para 2-12).

IS PAYLOAD LOOSE OR UNBALANCED?

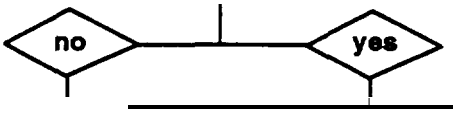

Check connections between dolly set and shelter (para 2-11).

B. Inspect resilient mounts for damage or wear (Table 2-1).

ARE RESILIENT MOUNTS DAMAGED?

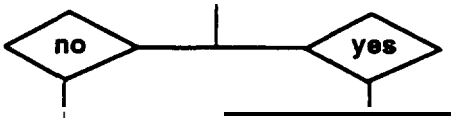

Notify Unit maintenance.

C. Make sure handbrakes are released.

ARE HANDBRAKES RELEASED?

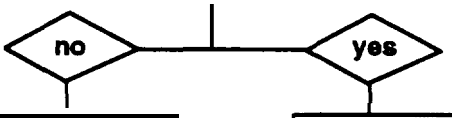

Release handbrakes.

Go to step D.

Continued on next page -

Table 3-1. Operator/Crew Troubleshooting Chart (con't).

STEERING SYSTEM (con?).	9. DOLLY WANDERS OR PULLS TO ONE SIDE (con't).

Continued from step C

D. Inspect tires for unequal tire pressures (Table 2-1).

ARE TIRE PRESSURES UNEQUAL?

Correct tire pressures (Table 2-1).

E. Inspect condition of tires (Table 2-1).

ARE TIRES DAMAGED?

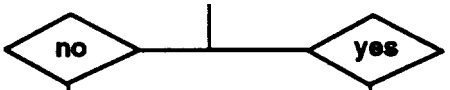

Notify Unit maintenance.

F. Inspect for loose wheels and loose or missing wheel nuts (Table 2-1).

ARE ANY WHEEL NUTS LOOSE OR MISSING?

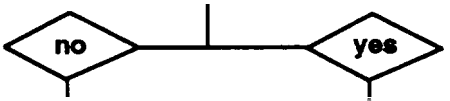

Notify Unit maintenance.

Notify Unit maintenance.

END OF TASK

Table 3-1. Operator/Crew Troubleshooting Chart (con't).

SUSPENSION SYSTEM.	10. TIRES SHOW ABNORMAL WEAR OR WHEELS SHIMMY.

Initial Setup:

Equipment Conditions:
- Dolly set parked on level surface with handbrakes applied.

A. inspect tires for unequal tire pressures (Table 2-1).

ARE TIRE PRESSURES UNEQUAL?

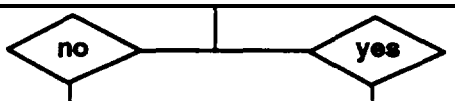

Correct tire pressures (Table 2-1).

B. Inspect for loose wheels and loose or missing wheel nuts (Table 2-1).

I ARE WHEEL NUTS LOOSE OR MISSING?

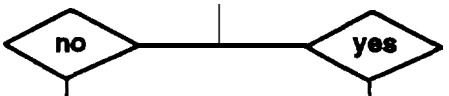

Notify Unit maintenance.

Notify Unit maintenance.

END OF TASK

Table 3-1. Operator/Crew Troubleshooting Chart (con't).

SUSPENSION SYSTEM (con't).	11. DOLLY SET LEANS TO ONE SIDE.

Initial Setup:

Equipment Conditions:
- Dolly set parked on level surface with handbrakes applied.

A. Inspect tires for unequal tire pressures (Table 2-1).

ARE TIRE PRESSURES UNEQUAL?

- no → A. Inspect for loose wheels and loose or missing wheel nuts (Table 2-1).
- yes → Correct tire pressures (Table 2-1).

B. Inspect for loose wheels and loose or missing wheel nuts (Table 2-1).

ARE WHEEL NUTS LOOSE OR MISSING?

- no → C. Inspect air springs for correct air pressures (para 2-14).
- yes → Notify Unit maintenance.

C. Inspect air springs for correct air pressures (para 2-14).

ARE AIR SPRING PRESSURES CORRECT?

- no → Correct air spring pressures (para 2-14). If beyond crew capabilities, notify Unit maintenance.
- yes → D. Check for unbalanced or incorrectly mounted payload and ensure struts are locked in place (para 2-12).

D. Check for unbalanced or incorrectly mounted payload and ensure struts are locked in place (para 2-12).

IS PAYLOAD SECURED AND MOUNTED PROPERLY AND STRUTS LOCKED?

- no → Correct deficiencies (paras 2-11 and 2-12).
- yes → Notify Unit maintenance.

END OF TASK

Section III. OPERATOR/CREW MAINTENANCE PROCEDURES

3-6. HANDBRAKE LEVER ADJUSTMENT

NOTE

- Handbrake lever is properly adjusted when additional force is needed to move lever beyond halfway point toward applied position.
- Handbrakes are applied when lever is horizontal, and released when lever is vertical.
- Each dolly set has two handbrake levers.

a. Release handbrakes by raising handbrake lever (1) to vertical position.

b. Rotate adjustment knob (2) clockwise to tighten or counterclockwise to loosen.

c. Check adjustment.

d. Repeat steps a through c as necessary.

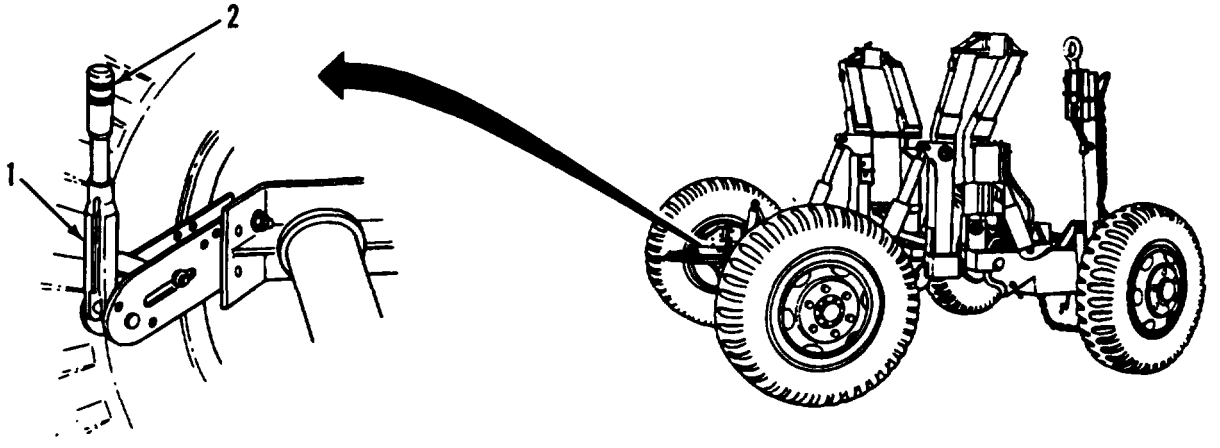

CHAPTER 4
UNIT MAINTENANCE

Section I. REPAIR PARTS; SPECIAL TOOLS; TEST, MEASUREMENT, AND DIAGNOSTIC EQUIPMENT (TMDE); AND SUPPORT EQUIPMENT

Paragraph Title	Page Number
Common Tools and Equipment	4-1
Repair Parts	4-1
Special Tools; Test, Measurement, and Diagnostic Equipment (TMDE); and Support Equipment	4-1

4-1. COMMON TOOLS AND EQUIPMENT.

Refer to the Modified Table of Organization and Equipment (MTOE) for authorized common tools and equipment applicable to your unit.

4-2. SPECIAL TOOLS; TEST, MEASUREMENT, AND DIAGNOSTIC EQUIPMENT (TMDE); AND SUPPORT EQUIPMENT.

Special tools, TMDE, and support equipment required to maintain this equipment are listed and illustrated in Appendix F of this manual.

4-3. REPAIR PARTS.

Repair parts are listed and illustrated in Appendix F of this manual.

Section II. SERVICE UPON RECEIPT

Paragraph Title	Page Number
General	4-2
Inspection Instructions	4-2
Servicing Instructions	4-2

4-4. GENERAL.

When a new, used, or reconditioned dolly set is first received, determine whether it has been property prepared for service and is in condition to perform its mission. Follow inspection instructions in paragraph 4-5 and servicing instructions in paragraph 4-6.

4-5. INSPECTION INSTRUCTIONS.

a. Refer to DD Form 1397 for procedures on unpacking the dolly set.

b. Remove all straps, plywood, tape, seals, and wrappings.

WARNING

Dry cleaning solvent, P-D-680, is toxic and flammable. Always wear protective goggles and gloves, and use only in a well-ventilated area. Avoid contact with skin, eyes, and cloths, and DO NOT breathe vapors. DO NOT use near open flame or excessive heat. The solvent's flashpoint is 100°F-138°F (38°C-59°C). If you become dizzy while using dry cleaning solvent, immediately get fresh air and medical help. If solvent contacts your eyes, immediately wash them and get medical aid.

c. Remove rust preventive compound from coated exterior parts of dolly set using dry cleaning solvent (Item 14, Appendix E) and rags (Item 11, Appendix E).

d. Inspect the dolly set for damage incurred during shipment. Check also to see if equipment has been modified.

e. Check equipment against packing list to make sure shipment is complete. Report any discrepancies in accordance with instructions in DA Pam 738-750.

4-6. SERVICING INSTRUCTIONS.

a. Perform all Operator/Crew and Unit Preventive Maintenance Checks and Services (PMCS). Schedule next PMCS on DD Form 314.

b. Lubricate all lubrication points as described in Chapter 3, Section 1, regardless of interval.

c. Report any problems on DA Form 2404.

Section III. UNIT PREVENTIVE MAINTENANCE CHECKS AND SERVICES (PMCS)

Paragraph Title	Page Number
General	4-3
General PMCS Procedure	4-3
Reporting Repairs	4-3
Service Intervals	4-3
Specific PMCS Procedures	4-4
Unit Preventive Maintenance Checks and Services (PMCS), Table 4-1	44

4-7. GENERAL.

To ensure that the M689, M832, and M840 Dolly Sets are ready for operation at all times, they must be inspected on a regular basis so that defects may be found before they result in serious damage, equipment failure, or injury to personnel. This section contains systematic instructions on inspections, adjustments, and corrections to be performed by Unit maintenance.

4-8. SERVICE INTERVALS.

Perform PMCS, listed in Table 4-1, at the following intervals:

(1) Perform *Quarterly* (Q) PMCS once every three months.

(2) Perform *Semiannual* (S) PMCS once every six months.

(3) Perform *Annual* (A) PMCS once each year.

4-9. REPORTING REPAIRS.

Report all defects and corrective actions on DA Form 2404. If a serious problem is found, report it to your supervisor immediately.

4-10. GENERAL PMCS PROCEDURES.

WARNING

Dry cleaning solvent, P-D-680, is toxic and flammable. Always wear protective goggles and gloves, and use only in a well-ventilated area. Avoid contact with skin, eyes, and clothes, and DO NOT breathe vapors. DO NOT use near open flame or excessive heat. The solvents flashpoint is 100°F-138°F (38°C-59°C). if you become dizzy while using dry cleaning solvent, Immediately get fresh air and medical help. if solvent contacts your eyes, immediately wash them and get medical aid.

a. Keep equipment clean. Dirt, oil, and debris may cover up a serious problem. Clean as you work and as needed. Use dry cleaning solvent (item 14, Appendix E) on all metal surfaces. Use soap and water on rubber, plastic, and painted surfaces.

b. While performing PMCS, inspect the following components:

(1) Bolts, Nuts, and Screws. Make sure they are not loose, missing, bent, or broken. Tighten any that are loose.

(2) Welds. inspect for gaps where parts are welded together. Report bad welds to your supervisor.

4-10. GENERAL PMCS PROCEDURES (Con't).

(3) Electric Wires or Connectors. Inspect for cracked or broken insulation, bare wires, and loose or broken connectors. Make repairs or replace as required.

(4) Hoses, Lines, and Fittings. Inspect for wear, damage, and leaks. Make sure clamps and fittings are tight. If leak originates from loose fitting or connector, tighten it. If component is broken or worn, correct problem if authorized by Maintenance Allocation Chart (MAC) (Appendix B). If not authorized, report the problem to your supervisor.

4-11. SPECIFIC PMCS PROCEDURES.

Unit PMCS are provided in Table 4-1. Always perform PMCS in the order listed. Once PMCS procedures become a habit, anything that is not right can be spotted in a minute. If anything wrong is discovered through PMCS, perform the appropriate troubleshooting task in Section IV of this chapter. If any component or system is not serviceable, or if a given service does not correct the problem, notify your supervisor.

b. Before performing preventive maintenance, read all checks required for applicable intervals and prepare the tools needed to make all checks. Have several clean rags (Item 11, Appendix E) handy. Perform ALL inspections at the applicable intervals.

c. The column headings in Table 4-1 are defined as follows:

(1) Item No. Provides a logical sequence for PMCS to be performed and is used as a source of item numbers for the "TM ITEM NO." column on DA Form 2404 in recording PMCS results.

(2) Interval. Specifies the interval at which PMCS is to be performed.

(3) Item To Be Inspected. Lists the system and common name of each item that is to be inspected. Included in this column are specific servicing, inspection, replacement, or adjustment procedures to be followed.

(4) Procedures. Tells you how to perform the required check or service.

Table 4-1. Unit Preventive Maintenance Checks and Services (PMCS).

M-MONTHLY Q-QUARTERLY S-SEMIANNUAL A-ANNUAL

ITEM NO.	INTERVAL M	INTERVAL Q	INTERVAL S	INTERVAL A	ITEM TO BE INSPECTED	PROCEDURE
						NOTE Perform Operator/Crew PMCS prior to or along with Unit PMCS.
1		•			DOLLY SET	Perform lubrication procedures (Chapter 3, Section I).
2	•				WHEELS AND TRACKS	Perform lubrication procedures (Chapter 3, Section I).
			•			a. Check lug nuts for proper torque. Torque lug nuts to 450-500 lb.-ft. (610-678 N•m).
			•			b. Inspect for damage and excessive wear (TM 9-2610-200-14).

Table 4-1. Unit Preventive Maintenance Checks and Services (PMCS) (Con't).

M-MONTHLY Q-QUARTERLY S-SEMIANNUAL A-ANNUAL

ITEM No.	INTERVAL M	Q	S	A	ITEM TO BE INSPECTED	PROCEDURE
3					AIR SPRINGS AND SUSPENSION	
			•			Check air springs, suspension, torsion bars, shock absorbers, and tie rods for damage. Check for tightness of ail assemblies and mounting bolts.
4					ELECTRICAL WIRING	
			•			Check branched wiring harness, connections, shells, grommets, and distribution box for damage.
5					BRAKES	
				•		a. Remove wheels, hubs, and brakedrums (paras 4-46 and 4-47). Clean, inspect, and repair or replace internal brake parts as required (para 4-37).
				•		b. Adjust brakes as required (para 4-37).
6					DATA PLATES	
				•		Make sure data plates are present and legible.
7					ROAD TEST	
				•		a. Perform road test. Give special attention to items t hat were repaired or adjusted. Be alert during road test for any unusual noises. **WARNING** A hot brake can cause serious bums. Use extreme caution before touching brakedrum after road test. Slowly move hand toward brakedrum. If brakedrum is overheated, radiated heat will be felt before actually touching brakedrum. **NOTE** An overheated wheel hub and brakedrum indicate an improperly adjusted or defective brake or wheel bearing.
				•		b. Immediately after road test, cautiously feel wheel hubs and brakedrum for abnormal heat.

SECTION IV. UNIT TROUBLESHOOTING

4-12. GENERAL.

NOTE

Before doing any troubleshooting, make sure you have performed all the Preventive Maintenance Checks and Services (PMCS) that address the problem area or system.

a. This section contains troubleshooting information for locating and correcting the troubles that may develop when operating the Dolly Set(s). The Unit Troubleshooting Fault Symptom Index follows these general instructions as listed at the beginning of Section IV. Fault symptoms are listed by SYSTEM, FAULT NUMBER, and FAULT SYMPTOM. Under FAULT SYMPTOM you will find a brief description, such as "Dim or Flickering Lights," or a brief description followed by additional, specific information, such as, "Brakes Do Not Apply/Weak Brakes, Grabbing or Uneven Braking Action."

b. Each malfunction for a component or system is followed by an Initial Setup block that lists tools, supplies, or additional personnel needed, plus a list of equipment conditions. The equipment conditions list tells you things you need to do before performing the actual troubleshooting procedure.

c. Before performing any troubleshooting, you are required to review the warning summary pages in the front of this manual and heed all warnings related to the area you are going to work on. In addition to the warnings on the summary pages, other WARNING, CAUTION, and NOTE entries may follow the Initial Setup block; these entries precede the step to which they apply and are to be considered part of the task.

d. The Initial Setup block is followed by a list of checks (tests or inspections), in the form of a branching logic tree that will help you determine corrective actions to take.

e. Before starting the procedures as written, do a brief but thorough inspection of the system/subsystems you are dealing with. Look for obvious damage or indications of problems, such as burned or charred wires or paint, broken wires, or loose or missing hardware. Next, starting with the first block, step A, perform the checks in the order given, then answer the question that follows with either "YES" or "NO." Follow the YES or NO path to the next step, and so on, until the problem is either fixed or referred to support maintenance for correction. Follow-on maintenance is listed at the end of the task, if needed. A fault is considered corrected only when the end item has been repaired and is returned to a fully mission-capable condition.

f. This manual cannot list all malfunctions that may occur, nor all possible tests, inspections, or corrective actions. If a malfunction is not listed or is not corrected by using the information given, notify your supervisor.

g. When troubleshooting the electrical system, you must disconnect the intervehicular cable (IVC) and set it aside before you make any continuity checks with your multimeter. This is a safety requirement and shell be followed at all times.

SECTION IV. UNIT TROUBLESHOOTING (con't)

4-13. TROUBLESHOOTING FAULT SYMPTOM INDEX.

SYSTEM	FAULT NUMBER	FAULT SYMPTOM	PAGE NUMBER
BRAKE	1	Brakes Do Not Apply/Weak Brakes, Grabbing or Uneven Brake Action	4-9
	2	Brakes Slow To Release/Do Not Release	4-12
	3	Handbrake Lever Difficult To Apply/Will Not Apply	4-15
ELECTRICAL	4	Blackout Stoplights and Taillights Inoperative	4-16
	5	Service Stoplights and Tailights Inoperative	4-19
	6	Dim or Flickering Lights	4-22
HYDRAULIC	7	Pump Will Not Supply or Maintain Pressure	4-24
	8	Pump Piston Does Not Draw a Full Charge	4-26
	9	Pump Piston Raises by Itself Under Pressure	4-27
	10	Pump Functions but Does Not Generate Full Pressure	4-28
	11	Pump Functions, Hydraulic Cylinder Does Not Extend	4-29
STEERING	12	Dolly Wanders or Pulls to One Side	4-30
SUSPENSION	13	Tires Show Wear or Wheels Shimmy	4-32
	14	Dolly Leans to One Side	4-34

Table 4-1. Unit Troubleshooting Chart.

BRAKE SYSTEM.	1. BRAKES DO NOT APPLY/WEAK BRAKES, GRABBING OR UNEVEN BRAKING ACTION.

Initial Setup:

Equipment Conditions:
- Dolly set parked on level surface.
- Dolly set coupled to towing vehicle with towing vehicle parking brake applied (para 2-14).

Tools and Test Equipment:
- General mechanic's tool kit
- Common no. 1 shop set

Personnel Required: Two

NOTE

This sequence of operations will require one person in the towing vehicle to apply and release brakes as directed, while the second person observes brake action.

A. Check brake fluid levels in master cylinders on front and rear dollies (para 3-2).

ARE FLUID LEVELS CORRECT?

no → Correct fluid levels per Lubrication Chart (para 3-2).

yes →

B. Shut off service brake air supply to dolly set at towing vehicle supply valve. Make sure dolly set air reservoir draincock is closed. Pull dolly set a few feet while observing dolly set tires for rotation.

DO ALL WHEELS ROTATE?

no → Go to step C.

yes → Troubleshoot towing vehicle brake system per applicable technical manual.

Continued on next page

Table 4-1. Unit Troubleshooting Chart (con't).

BRAKE SYSTEM (con't).	1. BRAKES DO NOT APPLY/WEAK BRAKES, GRABBING OR UNEVEN BRAKING ACTION (con't).

Continued from step B

C. Pull dolly set again, noting which wheels reotate. If one or more-wheels rotate, inspect brakes for out-of-adjustment condition.

ARE BRAKES ADJUSTED CORRECTLY?

- no → Adjust brakes (para 4-37).
- yes →

D. Bleed hydraulic brake system (para 4-38).

IS AIR OUT OF LINES?

- no → Check for hydraulic leaks. Replace defective parts per Section IX of this chapter.
- yes →

E. Release towing vehicle service brake. Uncouple dolly set from towing vehicle (para 2-16). Remove tires and brakedrums from wheels (paras 4-46 and 4-47). Inspect brakeshoes for excessive wear (pare 4-37).

DOES BRAKESHOE WEAR EXCEED LIMITS?

- no →
- yes → Replace brakeshoes (para 4-37).

F. Inspect wheel cylinders for leaks and movement.

ARE WHEEL CYLINDERS LEAKING OR FROZEN UP?

- no → Go to step G.
- yes → Replace suspect wheel cylinders (para 4-38).

Continued on next page

Table 4-1. Unit Troubleshooting Chart (con't).

BRAKE SYSTEM (con't).	1. BRAKES DO NOT APPLY/WEAK BRAKES, GRABBING OR UNEVEN BRAKING ACTION (con't).

Continued from step F

G. Inspect brake assemblies for condition of attaching hardware (para 4-37).

ANY HARDWARE MISSING OR DAMAGED?

- no → H.
- yes → Replace missing or damaged hardware (para 4-37).

H. Couple dolly set to towing vehicle (para 2-14). Perform a soapy water air leakage test on all connections involving air brake system. Leaks will be evident by bubbles forming in, on, or around air lines and connection points. If air bubbles form, remove and reseal these points or replace air hoses as required. Perform serviceability and leakage tests on dolly air brake system.

DOES SYSTEM PASS TESTS?

- no → Replace all failed hardware per Seciton IX of this chapter.
- yes → I.

I. Apply towing vehicle service brakes while observing air cylinder indicator (directly under air cylinder in center of bottom mounting screw).

DOES INDICATOR EXTEND FROM AIR CYLINDER?

- no → Replace air cylinder (para 4-41).
- yes → Replace master cylinder (para 4-39).

NOTE

If troubleshooting has been completed and brakes still do not function properly, notify Direct Support maintenance for assistance.

END OF TASK

Table 4-1. Unit Troubleshooting Chart (con't).

BRAKE SYSTEM (con't).	2. BRAKES SLOW TO RELEASE/DO NOT RELEASE.

Initial Setup:

Equipment Conditions:
- Dolly set parked on level surface.
- Dolly set coupled to towing vehicle with towing vehicle parking brake applied (para 2-14).

Tools and Test Equipment:
- General mechanic's tool kit
- Common no. 1 shop set

Personnel Required: Two

NOTE

This sequence of operations will require one person in the towing vehicle to apply and release brakes as directed, while the second person observes brake action.

A. Check brake fluid levels in master cylinders on front and rear dollies (para 3-2).

ARE FLUID LEVELS CORRECT?

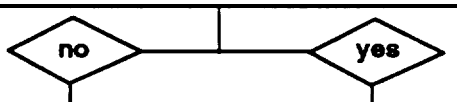

Correct brake fluid levels according to Lubrication Chart (para 3-2).

B. Chock towing vehicle securely. Make sure service and emergency air hoses remain connected. Apply and release towing vehicle service brake several times. Place your hand on dolly set brake backing plates. Feel for vibration.

DO BRAKES APPLY AND RETRACT PROPERLY?

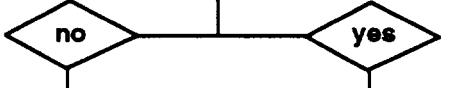

Troubleshoot towing vehicle brake system per applicable technical manual.

Go to step C.

Continued on next page

Table 4-1. Unit Troubleshooting Chart (con't).

BRAKE SYSTEM (con't).	2. BRAKES SLOW TO RELEAS/DO NOT RELEASE (con't).

Continued from step B

C. Inspect suspect brakes for out-of-adjustment conditions.

ARE BRAKES PROPERLY ADJUSTED?

- no → Adjust brakes (para 4-37).
- yes →

NOTE

Disconnect towing vehicle service and emergency air hoses. Drain dolly set air reservoir at draincock prior to performing steps D through F.

D. Remove tires and brakedrums from wheels (paras 4-46 and 4-47). Inspect condition of brake assemblies and mounting hardware (para 4-37).

ANY HARDWARE MISSING OR DAMAGED?

- no →
- yes → Replace any missing/damaged components (para 4-37).

E. Inspect wheel cylinder hydraulic links (para 4-38).

ARE LINKS FULLY RETRACTED?

- no → Replace wheel cylinders (para 4-38).
- yes → Go to step F.

Continued on next page

Table 4-1. Unit Troubleshooting Chart (con't).

BRAKE SYSTEM (con't).	2. BRAKES SLOW TO RELEASE/DO NOT RELEASE (con't).

Continued from step E

NOTE

Both rear brakes use the master cylinder mounted on rear axle. Both front brakes use the master cylinder mounted on front axle. When performing step F, make sure this relationship is maintained.

F. Apply towing vehicle service brakes while observing air cylinder indicator at power cluster (directly under air cylinder in center of bottom mounting screw).

DOES INDICATOR EXTEND FROM AIR CYLINDER?

Replace air cylinder (para 4-41).

Notify Direct Support maintenance.

END OF TASK

Table 4-1. Unit Troubleshooting Chart (con't).

BRAKE SYSTEM (con't).	3. HANDBRAKE LEVER DIFFICULT TO APPLY/WILL NOT APPLY.

Initial Setup:

Equipment Conditions:
- Dolly set parked on level surface.
- Dolly set coupled to towing vehicle with towing vehicle parking brake applied (pars 2-14).

Tools and Test Equiprnent:
- General mechanic's tool kit
- Common no. 1 shop set

A. Check handbrake cable for proper lubrication and/or obstructions (para 4-36).

ARE THERE ANY OBSTRUCTIONS?

no → B.

yes → Remove any obstructions and readjust handbrake cable at lever if necessary (para 4-36).

B. Make sure handbrake actuating lever is properly secured to handbrake cable link (para 4-36).

IS LEVER SECURED TO LINK?

no → Secure cable to link (para 4-36).

yes → C.

C. Make sure handbrake cable is property attached to rear brake assembly (para 4-36).

IS CABLE ATTACHED TO BRAKE ASSEMBLY?

no → Properly install handbrake cable on brake assembly (para 4-36). Readjust cable if necessary (para 3-5).

yes → Notify Direct Support maintenance.

END OF TASK

Table 4-1. Unit Troubleshooting Chart (con't).

ELECTRICAL SYSTEM.	4. BLACKOUT STOPLIGHTS AND TAILLIGHTS INOPERATIVE.

Initial Setup:

Equipment Conditions:
- Dolly set parked on level surface.
- Dolly set coupled to towing vehicle with towing vehicle parking brake applied (para 2-14).

Tools and Test Equipment:
- General mechanic's tool kit
- Common no. 1 shop set
- Multimeter

NOTE

- Instead of using multimeter for voltage check, STE/ICE TEST no. 89 may be performed.
- Instead of using multimeter for continuity check, STE/ICE TEST no. 91 may be performed.
- Perform pin-to-pin continuity checks on intervehicular cable (IVC) before any other tests to ensure there are no broken wires internal to IVC. If any tests fail, replace IVC before proceeding.
- This procedure is identical for both taillights.

A. Make sure towing vehicle light switch is set on B/O DRIVE and IVC is securely attached to towing vehicle. Turn towing vehicle master switch OFF. Disconnect IVC from dolly distribution box. Place multimeter red lead on IVC pin F, and ground black lead by placing it on pin L. Turn towing vehicle master switch ON and check for battery voltage. Repeat for pins C and A.

IS BATTERY VOLTAGE PRESENT?

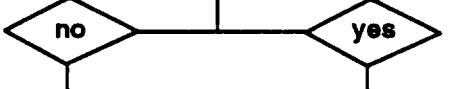

Troubleshoot towing vehicle electrical system per applicable technical manual.

Go to step B.

Continued on next page

Table 4-1. Unit Troubleshooting Chart (con't).

ELECTRICAL SYSTEM (con't).	4. BLACKOUT STOPLIGHTS AND TAILLIGHTS INOPERATIVE (con't).

Continued from step A

B. Turn towing vehicle master switch OFF. Disconnect IVC cable from distribution box. Disconnect wire 23 from both composite taillight assemblies. Place multimeter red lead on pin F of distribution box connector. Place multimeter black lead in sockets of two wires 23 of chassis wiring harness. Check two wires 23 for continuity.

IS CONTINUITY PRESENT?

- no → Replace or repair chassis wiring harness (para 4-25).
- yes → Connect disconnected wires.

C. Disconnect wire 484-24 from wire 24 on left composite taillight assembly. Place multimeter red lead on pin A of distribution box connector. Place multimeter black lead on wire 484-24 socket at left taillight disconnect. Check wire 484-24 for continuity. Repeat procedure on pin C and wire 483-24 (right taillight).

IS CONTINUITY PRESENT?

- no → Replace or repair chassis wiring harness (para 4-25).
- yes → Connect disconnected wires.

D. Connect IVC cable securely to towing vehicle and dolly set control box receptacle. Turn towing vehicle master switch ON. Remove taillight cover from taillight assembly and remove inoperative light bulb(s) from sockets (para 4-24). Engage service brake on towing vehicle. Place multimeter red lead on center contact in light socket assembly. Do not let red lead touch side of socket. Ground black lead to vehicle frame, ensuring metal-to-metal contact.

IS BATTERY VOLTAGE PRESENT?

Continued on next page

Table 4-1. Unit Troubleshooting Chart (con't).

ELECTRICAL SYSTEM (con't).	4. BLACKOUT STOPLIGHTS AND TAILLIGHTS INOPERATIVE (con't).

Continued fom step D

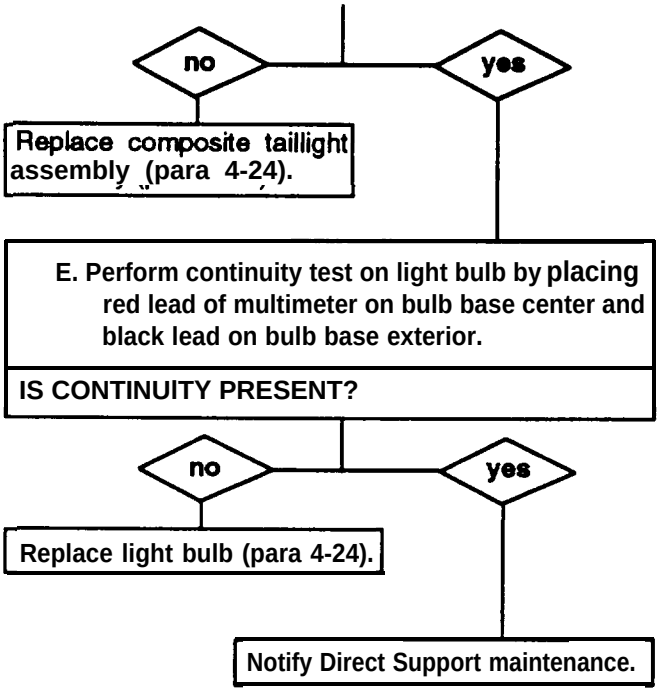

END OF TASK

Table 4-1. Unit Troubleshooting Chart (con't).

ELECTRICAL SYSTEM (con't).	5. SERVICE STOPLIGHTS AND TAILLIGHTS INOPERATIVE.

Initial Setup:

Equipment Conditions:
- Dolly set parked on level surface.
- Dolly set coupled to towing vehicle with towing vehicle parking brake applied (pars 2-14).

Tools and Test Equipment:
- General mechanic's tool kit
- Common no. 1 shop set
- Multimeter

NOTE

- Instead of using multimeter for voltage check, STE/ICE TEST no. 89 may be performed.
- Instead of using multimeter for continuity check, STE/ICE TEST no. 91 may be performed.
- Perform pin-to-pin continuity checks on intervehicular cable (IVC) before any other tests to ensure there are no broken wires internal to IVC. If any tests fail, replace IVC before proceeding.
- This procedure applies to both taillights.

A. Set towing vehicle light switch to SER DRIVE. Turn towing vehicle master switch OFF. Disconnect IVC from dolly distribution box. Engage service brake on towing vehicle. Place multimeter red lead on IVC connector pin E, and ground black lead by placing on pin L. Turn towing vehicle master switch ON and check pin E for battery voltage. Repeat for pins B and J.

IS BATTERY VOLTAGE PRESENT?

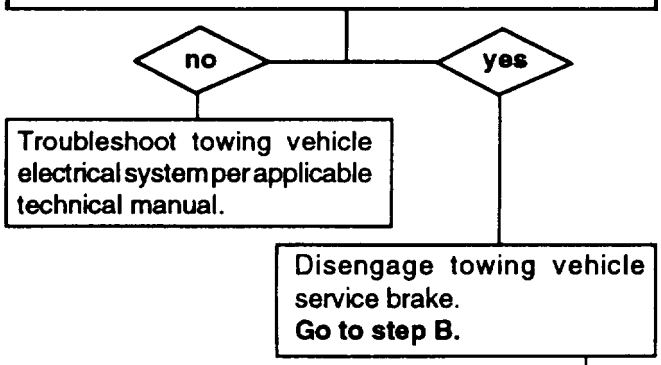

Continued on next page

Table 4-1. Unit Troubleshooting Chart (con't).

ELECTRICAL SYSTEM (con't).	5. SERVICE STOPLIGHTS AND TAILLIGHTS INOPERATIVE (con't).

Continued from step A

B. Turn towing vehicle master switch OFF. Disconnect IVC from distribution box. Disconnect wires 489-21 from both composite taillight assemblies. Place multimeter red lead in pin E of distribution box connector. Place multimeter black lead in chassis wiring harness socket for both wires 489-21. Check for continuity.

IS CONTINUITY PRESENT?

- no → Replace or repair chassis wiring harness (para 4-25).
- yes → Connect disconnected wires.

C. Disconnect wire 481-22 from left composite taillight assembly and wire 480-22 from right composite taillight assembly. Engage service brake on towing vehicle. Place multimeter red lead on pin B of distribution box connector. Place multimeter black lead on wire 461-22 socket at left taillight disconnect. Check wire 481-22 for continuity. Repeat procedure on pin J and wire 480-22 (right taillight).

IS CONTINUITY PRESENT?

- no → Replace or repair chassis wiring harness (para 4-25).
- yes → Connect wires 461-22 and 460-22 at composite taillight assemblies. **Go to step D.**

Continued on next page

Table 4-1. Unit Troubleshooting Chart (con't).

ELECTRICAL SYSTEM (con't).	5. SERVICE STOPLIGHTS AND TAILLIGHTS INOPERATIVE (con't).

Continued from step C

D. Connect IVC to dolly set distribution box. Turn towing vehicle master switch OFF. Disconnect wires 489-21 from both composite taillight assemblies. Disconnect wire 461-22 from left composite taillight assembly and wire 460-22 from tight composite taillight assembly. Turn towing vehicle master switch ON. Engage towing vehicle service brake. Alternately place red lead of multimeter in center of all disconnected wires and ground black lead to vehicle frame. ensuring metal-to-metal contact.

IS BATTERY VOLTAGE PRESENT AT ALL SOCKET POINTS?

- no → Replace or repair chassis wiring harness (para 4-25).
- yes → Turn towing vehicle master switch OFF. Connect all disconnected wires.

E. Turn towing vehicle master switch ON. Remove taillight cover from taillight assembly, and remove inoperative light bulb(s) from sccket(s). Place multimeter red lead on center contact in light socket assembly. Do not let red lead touch side of socket. Ground black lead to socket base, ensuring metal-to-metal contact.

IS BATTERY VOLTAGE PRESENT?

- no → Replace composite stoplight-taillight assembly (para 4-24).
- yes → F. Perform continuity test on light bulb by placing red lead of multimeter on bulb base center and black lead on bulb base exterior.

IS CONTINUITY PRESENT?

- no → Replace light bulb (para 4-24).
- yes → Notify Direct Support maintenance.

Table 4-1. Unit Troubleshooting Chart (con't).

ELECTRICAL SYSTEM (con't).	6. DIM OR FLICKERING LIGHTS.

Initial Setup:

Equipment Conditions:
- Dolly set parked on level surface.
- Dolly set coupled to towing vehicle with towing vehicle parking brake applied (para 2-14).

Tools and Test Equipment:
- General mechanic's tool kit
- Common no. 1 shop set
- Multimeter

NOTE

- Instead of using multimeter for voltage check STE/ICE TEST no. 89 may be performed.
- Instead of using multimeter for continuity check, STE/ICE TEST no. 91 may be performed.
- Perform pin-t-pin continuity checks on intervehicular cable (IVC) before any other tests to ensure there are no broken wires internal to IVC. If any tests fail, replace IVC before proceeding.

A. Turn towing vehicle master switch OFF. Disconnect intervehicular cable from distribution box. Place multimeter red lead on socket A of intervehicular cable, and ground black lead by placing on pin L. Turn towing vehicle master switch ON and check for voltage.

IS VOLTAGE LESS THAN 21 VDC?

- no → B.
- yes → Troubleshoot towing vehicle electrical system per applicable technical manual.

B. Inspect composite taillight mounting bracket for looseness. Taillights ground to vehicle chassis through taillight bracket.

IS BRACKET LOOSE?

- no → Go to step C.
- yes → Clean surface between bracket and vehicle chassis. Tighten bracket bolts.

Continued on next page

Table 4-1. Unit Troubleshooting Chart (con't).

ELECTRICAL SYSTEM (con't).	6. DIM OR FLICKERING LIGHTS (con't).

Continued from step B

C. Turn towing vehicle master switch OFF. Remove distribution box from dolly. Disassemble distribution box and inspect for dirt, corrosion, moisture, loose ground wires, and bad connections.

IS DISTRIBUTION BOX IN GOOD CONDITION?

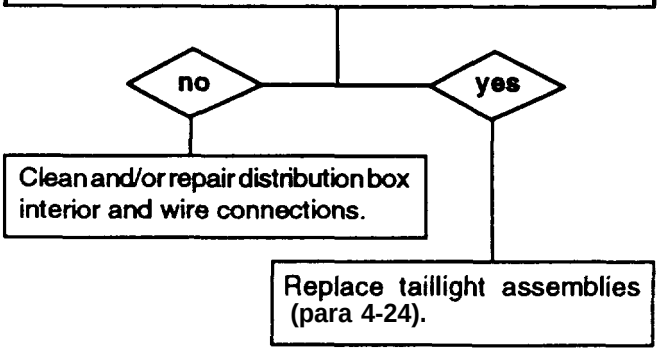

END OF TASK

Table 4-1. Unit Troubleshooting Chart (con't).

HYDRAULIC SYSTEM.	7. PUMP WILL NOT SUPPLY OR MAINTAIN PRESSURE

Initial Setup:

Equipment Conditions:
- Dolly set parked on level surface with handbrakes applied (para 2-2).

Tools and Test Equipment:
- General mechanic's tool kit
- Common no. 1 shop set

A. Inspect hydraulic pump reservoirs on front and rear dollies for proper hydraulic fluid levels (para 3-2).

ARE FLUID LEVELS CORRECT?

- no → Correct fluid level per Lubrication Chart (para 3-2).
- yes →

B. Bleed hydraulic system (para 4-75 or 4-78). Inspect for excessive air bubbles in fluid.

ARE EXCESSIVE AIR BUBBLES PRESENT?

- no →
- yes → Replace fluid as necessary and recheck hydraulic system (para 3-2).

C. Inspect pump handle and piston actuating linkage.

IS LINKAGE/HANDLE MECHANISM OK?

- no → Repair linkage and/or handle (para 4-76, 4-79, or 4-82).
- yes →

D. Test hydraulic pump output pressure (para 4-77 or 4-80.

IS PRESSURE OK?

- no → Go to step E.
- yes → Replace hyfraulic cylinder (para 4-86,.

Continued on next page

Table 4-1. Unit Troubleshooting Chart (con't).

HYDRAULIC SYSTEM (con't).	7. PUMP WILL NOT SUPPLY OR MAINTAIN PRESSURE (con't).

Continued from step D

E. Adjust hydraulic pump output pressure (para 4-77 or 4-80).

IS PRESSURE OK?

- no → NOTE
- yes → Replace hydraulic cylinder (para 4-86).

NOTE

Pump does not have to be removed from dolly set in order to remove piston.

F. Disassemble and remove piston assembly from pump. Inspect spring, piston, preformed packing, and sleeve for excessive wear (para 4-76, 4-79, or 4-82).

IS PISTON ASSEMBLY WORN?

- no → G
- yes → Replace piston assembly (para 4-76,4-79, or 4-82).

G. Remove hydraulic pump from dolly (para 4-75 or 4-78). Disassemble and clean pump valve and overload valve (para 4-76, 4-79, or 4-82). Install pump (para 4-75,4-78, or 4-81).

DOES PUMP SUPPLY PRESSURE NOW?

- no → Replace hydraulic pump (para 4-75,4-78, or 4-81).
- yes → Problem solved. Continue mission.

END OF TASK

Table 4-1. Unit Troubleshooting Chart (con't).

HYDRAULIC SYSTEM (con't).	8. PUMP PISTON DOES NOT DRAW A FULL CHARGE.

Initial Setup:

Equipment Conditions:
. Dolly set parked on level surface with handbrakes applied (pars 2-2).

Tools and Test Equipment:
- General mechanic's tool kit
- Common no. 1 shop set

A. Bleed hydraulic system (pars 4-75 or 4-78). Inspect hydraulic system for excessive air bubbles in fluid.

ARE EXCESSIVE AIR BUBBLES PRESENT?

- no → B
- yes → Replace fluid as necessary and recheck hydraulic system (pars 3-2).

B. Inspect pump handle and piston actuating link.

IS LINKAGE/HANDLE MECHANISM OK?

- no → Repair linkage/handle (para 4-76, 4-79, or 4-82).
- yes → C

C. Disassemble and remove piston assembly from pump. Inspect spring, piston, preformed packing, and sleeve for excessive wear (para 4-76, 4-79, or 4-82).

IS PISTON ASSEMBLY WORN?

- no → Replace hydraulic pump (para 4-75, 4-78, or 4-81).
- yes → Replace piston assembly (para 4-76, 4-79, or 4-82).

NOTE

If problem still exists, notify Direct Support maintenance for assistance.

END OF TASK

Table 4-1. Unit Troubleshooting Chart (con't).

HYDRAULIC SYSTEM (con't).	9. PUMP PISTON RAISES BY ITSELF UNDER PRESSURE.

Initial Setup:

Equipment Conditions:
- Dolly set parked on level surface with handbrakes applied (para 2-2).

Tools and Test Equipment:
- General mechanic's tool kit
- Common no. 1 shop set

Remove hydraulic pump from dolly (para 4-75, 4-78, or 4-81). Remove components of pump valve from hydraulic pump. Clean components of hydraulic pump valve. Clean and seat ball valves (para 4-76, 4-79, or 4-82). Install hydraulic pump on dolly (para 4-75, 4-78, or 4-81).

DOES PUMP SUPPLY PRESSURE NOW?

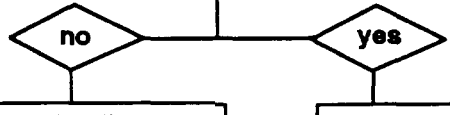

Replace hydraulic pump (para 4-75, 4-78, or 4-81).

Go to next fault symptom.

END OF TASK

Table 4-1. Unit Troubleshooting Chart (con't).

HYDRAULIC SYSTEM (con't).	10. PUMP FUNCTIONS BUT DOES NOT GENERATE FULL PRESSURE.

Initial Setup:

Equipment Conditions:
- Dolly set parked on level surface with handbrakes applied (para 2-2).

Tools and Test Equipment.
- General mechanic's tool kit
- Common no. 1 shop set

A. Remove hydraulic pump from dolly (para 4-75, 4-78, or 4-81). Remove overload valve from hydraulic pump (pare 4-76,4-79, or 4-82). Clean and inspect valve hole. Clean and seat ball valves (pare 4-76,4-79, or 4-82). Install overload valve on hydraulic pump (para 4-76, 4-79, or 4-82).

DOES PUMP FUNCTION AT MAXIMUM PRESSURE?

- no → Replace hydraulic pump (para 4-75, 4-78, or 4-81).
- yes → Go to next fault symptom.

B. Test hydraulic pump output pressure (para 4-77 or 4-80).

IS PRESSURE OK?

- no →
- yes → Go to next fault symptom.

C. Adjust hydraulic pump output pressure (para 4-77 or 4-80).

IS PRESSURE OK?

- no → Replace hydraulic pump (para 4-75,4-78, or 4-81). If problem still exists, notify Direct Support maintenance for assistance.
- yes → Problem solved. Continue mission.

END OF TASK

Table 4-1. Unit Troubleshooting Chart (con't).

HYDRAULIC SYSTEM (con't).	11. PUMP FUNCTIONS, HYDRAULIC CYLINDER DOES NOT EXTEND.

Initial Setup:

Equipment Conditions:
- Doily set parked on level surface with handbrakes applied (para 2-2).

Tools and Test Equipment:
- General mechanic's tool kit
- Common no. 1 shop set

NOTE

- Make sure brakes on front dolly are disengaged.
- Make sure all valves are in appropriate positions for lifting operations (para 2-12).
- Pressurize hydraulic system before proceeding with this task.

A. Open bleeder valve on hydraulic cylinder (para 4-75 or 4-78.

ARE EXCESSIVE AIR BUBBLES PRESENT?

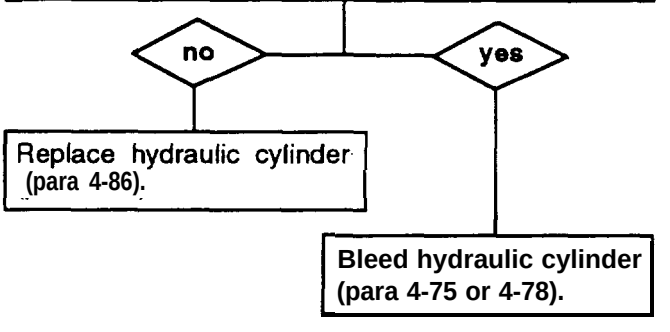

END OF TASK

Table 4-1. Unit Troubleshooting Chart (con't).

STEERING SYSTEM.	12. DOLLY WANDERS OR PULLS TO ONE SIDE

Initial Setup:

Equipment Condltions:
- Dolly set parked on level surface with handbrakes applied (para 2-2).

Tools and Test Equipment:
- General mechanic's tool kit
- Common no. 1 shop set

A. Inspect steering mechanisms for loose or worn tie-rod ends and/or disconnected or bent linkages (pars 4-29).

ARE TIE-ROD ENDS WORN OR LINKAGES BENT?

no → B.

yes → Replace any worn or bent hardware (pare 4-29).

B. Inspect wheel alinement (para 4-32).

ARE WHEELS ALINED PROPERLY?

no → Aline front wheels (para 4-32).

yes → C.

C. Remove tires and brakedrums until wheel bearings are exposed (paras 4-46 and 4-47). Inspect wheel bearings for damage or wear (pars 4-47).

ARE WHEEL BEARINGS OK?

no → Replace wheel bearings (pars 4-47).

yes → D.

D. Inspect steering knuckles for excessive wear or out-of-tolerance kingpin bushings (para 4-31).

ARE KINGPIN BUSHINGS OK?

no → Replace worn kingpin bushings (para 4-31).

yes → Go to step E.

Continued to next page

Table 4-1. Unit Troubleshooting Chart (con't).

STEERING SYSTEM (con't).	12. DOLLY WANDERS OR PULLS TO ONE SIDE (con't).

Continued from atop D

E. Inspect front and rear shock absorbers for leaks or damage.

ARE SHOCKS IN GOOD CONDITION?

- no → Replace shock absorbers (para 4-61).
- yes →

F. inspect pivot pin and kingpin on drawbar for damage or improper connection at dolly attachment point. inspect resilient mounts for damage or wear (Table 2-1).

ARE DRAWBAR COMPONENTS OK AND SECURELY ATTACHED?

- no → Repair drawbar assembly (para 4-54).
- yes → Perform suspension system troubleshooting (fault numbers 13 and 14).

END OF TASK

Table 4-1. Unit Troubleshooting Chart (con't).

SUSPENSION SYSTEM	13. TIRES SHOW WEAR OR WHEELS SHIMMY.

Initial Setup:

Equipment Conditions:
- Dolly set parked on level surface with handbrakes applied (para 2-2).

Tools and Test Equipment
- General mechanic's tool kit
- Common no. 1 shop set

NOTE

Prior to performing step A, check condition of tire tread wear. Inspect tires (Table 2-1).

A. inspect wheel alinement (para 4-32).

ARE WHEELS ALINED PROPERLY?

no → B.

yes → Go to step C.

B. Lift and support dolly set on axle stands. Rotate tires and check for excessive lateral motion (shimmy).

DO WHEELS HAVE EXCESSIVE LATERAL MOTION WHILE ROTATING?

no → C.

yes → Balance tires (refer to TM 9-2610-200-14).

C. Lift and support dolly set on axle stands. Remove tires (pars 4-46) and hubs (pars 4-47) until wheel bearings are exposed. inspect bearings for damage or wear (pars 4-47).

ARE BEARING IN GOOD CONDITION?

no → Replace wheel bearings (para 4-47).

yes → Go to step D.

Continued on next page

Table 4-1. Unit Troubleshooting Chart (con't).

SUSPENSION SYSTEM (con't).	13. TIRES SHOW WEAR OR WHEELS SHIMMY (con't).

Continued from step C

D. Inspect front and rear dolly set(s) shock absorbers for leaks or damage.

ARE SHOCK ABSORBERS DAMAGED/LEAKING?

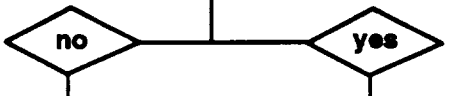

Replace defective shock absorbers (para 4-61).

Notify Direct Support maintenance.

END OF TASK

Table 4-1. Unit Troubleshooting Chart (con't).

SUSPENSION SYSTEM (con't).	14. DOLLY LEANS TO ONE SIDE.
Initial Setup:	
Equipment Conditions: . Dolly set parked on level surface with handbrakes applied (pare 2-2).	**Tools and Test Equipment:** • General mechanic's tool kit • Common no. 1 shop set

A. Uncouple dolly set from towing vehicle (pars 2-16). Lower shelter (para 2-17) and detach from dolly set (para 2-18). Couple front and rear halves of dolly (pars 2-19). With jacks and axle stands, raise dolly until tires clear ground. Inspect dolly suspension for damage or missing components (Table 4-1 and para 4-62, 4-63, or 4-64).

ARE ANY COMPONENTS MISSING OR DAMAGED?

- no → B.
- yes → Replace missing or damaged components (para 4-62, 4-63, or 4-64).

B. Inspect front and rear shock absorbers for leaks or damage.

ARE SHOCK ABSORBERS DAMAGED OR LEAKING?

- no → C.
- yes → Replace leaking or damaged shock absorbers (para 4-62, 4-63, or 4-64).

C. Check air springs for damage and check for tightness of all mounting bolts. Apply soapy water to air springs and observe for leakage.

ARE AIR SPRINGS DAMAGED OR LEAKING?

- no → Go to step D.
- yes → Replace damaged or leaking air springs (para 4-60).

Continued on next page

Table 4-1. Unit Troubleshooting Chart (con't).

SUSPENSION SYSTEM (con?).	14. DOLLY LEANS TO ONE SIDE (con?).

Continued from step C

D. Inspect suspension bars for damage (para 4-62 or 4-63 and 4-64).

ARE SUSPENSION BARS PROPERLY ALINED?

no → Replace damaged suspension bars (para 4-62 or 4-63 and 4-64).

yes →

E. Inspect alining rods and rear stabilizer bars for damage (Table 2-1).

ARE ALINING RODS OR REAR STABILIZER BARS DAMAGED?

no → Notify Direct Support maintenance.

yes → Replace damaged or bent components (pares 4-65,4-66, or 4-67).

END OF TASK

Section V. GENERAL MAINTENANCE INSTRUCTIONS

Paragraph Title	Page Number
Cleaning Instructions	4-36
General	4-36
Inspection Instructions	4-38
Repair Instructions	4-38
Work Safety	4-36

4-14. GENERAL

a. These general maintenance instructions contain general shop practices and specific methods you must be familiar with to properly maintain your dolly set. You should read and understand these practices and methods before performing any Unit maintenance tasks.

b. Before beginning a task, find out how much repair, modification, or replacernent is needed to fix the equipment. sometimes the reason for equipment failure can be seen right away and complete teardown is not necessary. Disassemble equipment only as far as necessary to repair or replace damaged or broken parts.

c. In some cases, a part may be damaged by removal. If the part appears to be good and other parts behind it are not defective, leave it on and continue with the procedure. Here are a few simple rules

(1) Do not remove dowel pins or studs unless loose, bent, broken, or otherwise damaged.

(2) Do not remove bearings or bushings unless damaged. If you need to remove thereto access parts behind them, pull bearings and bushings out carefully.

(3) Replace all gaskets, seals, and preformed packings.

d. The following "Initial Setup" information applies to all procedures

(1) Resources are not listed unless they apply to the procedure.

(2) "Personnel Required" is listed only if more than one technician is required to complete the task.

e. All tags and forms attached to equipment must be checked to leam the reason for the equipment's removal from service. Modification work orders and technical bulletins must be checked for equipment changes and updates.

4-15. WORK SAFETY.

a. Observe all WARNINGS and CAUTIONS. Always use power tools carefully.

b. Protect yourself against injury. Wear protective gear such as safety goggles or lenses, safety shoes, rubber apron, or gloves.

c. When lifting heavy parts, have someone help you. Make sure liftng/jacking equipment is working properly, is suitable for the assigned task, and is secure against slipping.

4-16. CLEANING INSTRUCTIONS.

WARNING

Improper cleaning methods and use of unauthorized cleaning liquids or solvents can injure personnel and damage equipment. To prevent this, refer to TM 9-247.

4-16. CLEANING INSTRUCTIONS (Con't).

a. General. Cleaning instructions will be the same for a majority of parts and components that make up the dolly set. The following should apply to all cleaning operations:

(1) Clean all parts before inspection, after repair, and before assembly.

(2) Keep hands free of grease, which can collect dust, dirt, and grit.

(3) After cleaning, all parts should be covered or wrapped to protect them from dust and dirt. Parts that are subject to rust should be lightly oiled.

b. Steam Cleaning.

(1) Before steam cleaning exterior of dolly set, protect all electrical equipment that could be damaged by steam or moisture.

(2) Place disassembled parts in a suitable container to steam-clean. Parts that are subject to rust should be dried and lightly oiled after cleaning.

c. Castings, Forgings, and Machined Metal Parts.

WARNING

Dry cleaning solvent, P-D-680, is toxic and flammable. Always wear protective goggles and gloves, and use only in a well-ventilated area. Avoid contact with skin, eyes, and clothes, and DO NOT breath vapors. DO NOT use near open flame or excessive heat. The solvent's flashpoint is 100°F-138°F (38°C-59°C). If you become dizzy while using dry cleaning solvent, immediately get fresh air and medical help. If solvent contacts your eyes, immediately wash them and get medical aid.

(1) Clean inner and outer surfaces with dry cleaning solvent (Item 14, Appendix E).

(2) Remove grease and accumulated depposits with a stiff bristle brush.

WARNING

Compressed air used for cleaning or drying purposes, or for clearing restrictions, should never exceed 30 psi (207 kPa). Wear protective clothing (goggles/shield, gloves, etc.) and use caution to avoid injury to personnel.

(3) Clear all threaded holes with compressed air to remove dirt and cleaning fluids.

CAUTION

Do not wash oil seals, electrical cables, and flexible hoses with dry cleaning solvent or mineral spirits. Serious damage or destruction of material would result.

d. Oil Seals, Electrical Cables, and Flexible Hoses. Wash electrical cables and flexible hoses with a solution of soap and water.

e. Bearings. Clean bearings is accordance with TM 9-214.

4-17. INSPECTION INSTRUCTIONS.

NOTE

All damaged areas must be marked for repair or replacement.

a. All components and parts must be carefully checked to determine if they are serviceable for use, can be repaired, or must be scrapped.

b. Inspect drilled and tapped (threaded) holes for the following:

(1) Wear, distortion, cracks, and any other damage in or around holes.

(2) Wear, distortion (stretching), and evidence of cross-threading in threaded areas.

c. Inspect flexible lines (hoses) and metal fittings for the following:

(1) Sharp kinks, cracks, bad bends, and dents in metal lines.

(2) Fraying, evidence of leakage, and hose metal fittings or connectors in flexible tines.

(3) Thread damage and worn or rounded hex heads in metal fittings and connectors.

d. Inspect castings, forgings, and machined metal parts for the following:

(1) Nicks, burrs, raised metal, wear, and other damage in machined surfaces.

(2) Breaks and cracks in inner and outer surfaces.

e. Inspect airlines, fittings, and connectors for leaks by costing them with a solution of soap and water. No leakage is permissible.

f. Inspect bearings in accordance with TM 9-214.

4-18. REPAIR INSTRUCTIONS.

a. Repair castings, forgings, and machined metal parts as follows:

(1) Repair minor cracked castings or forgings in accordance with TM 9-237.

(2) Repair minor damage to machined surfaces with a fine mill fife or an abrasive cloth dipped in dry cleaning solvent (Item 14, Appendix E).

(3) Replace any deeply nicked machined surfaces that could affect the assembly operation.

(4) Repair minor damage to threaded capscrew holes with thread tap of same size, to prevent cutting oversize.

b. After repair, thoroughly clean all parts to prevent dirt, metal chips, or other foreign material from entering any working parts.

Section VI. ELECTRICAL SYSTEM MAINTENANCE

Paragraph Title	Page Number
Blackout Stoplight Replacement (M689)	4-52
Branched Wiring Harness Replacement	4-56
Composite Stoplight-taillight Maintenance (M832 and M840)	4-54
Front Distribution Box Maintenance (M689 and M840)	4-39
Rear Distribution Box Maintenance (M689 and M840)	4-42
Rear Distribution Box Maintenance (M832)	4-46
Stoplight-taillight Maintenance (M689)	4-50
Wiring Diagrams	4-58

4-19. FRONT DISTRIBUTION BOX MAINTENANCE (M689 AND M840).

This Task Covers:

a. Removal
b. Disassembly
c. Cleaning and Inspection
d. Assembly
e. Installation

Initial Setup:

Equipment Conditions:

- Intervehicular cable disconnected from towing vehicle and distribution box (para 2-11).

Tools/Test Equipment:

- General mechanic's tool kit
- Common no. 1 shop set

Materials/Parts:

- Solder (Item 13, Appendix E)
- Dry cleaning solvent (Item 14, Appendix E)
- Marker tags (Item 16, Appendix E)
- One bushing
- One gasket
- Sixteen lockwashers

4-19. FRONT DISTRIBUTION BOX MAINTENANCE (M689 AND M840) (Con't).

a. REMOVAL

1. Remove ten screws (8), lockwashers (7), and cover (17) from front distrribution box (11). Discard lockwashers.
2. Remove four screws (13), washers (12), and distribution box (11) from front dolly.

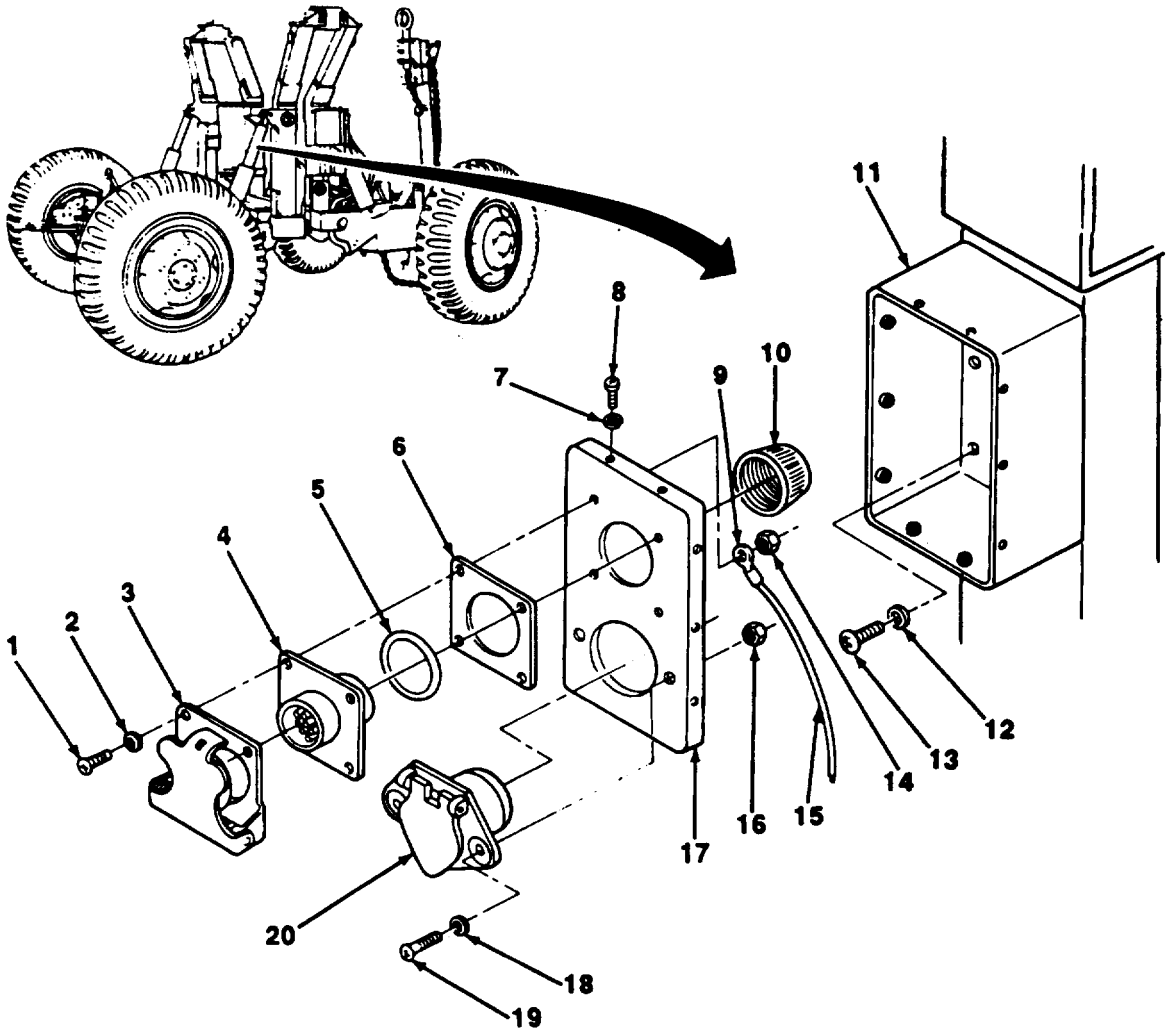

4-19. FRONT DISTRIBUTION BOX MAINTENANCE (M689 AND M840) (Con't).

b. DISASSEMBLY

1. Remove retaining nut (10) from rear of connector (4).
2. Tag and disconnect wires (15) from connectors (4 and 20).
3. Remove four nuts (14), terminal lugs (9), screws (1), lockwashers (2), cover (3), connector (4), bushing (5), and gasket (8) from cover (17). Discard lockwashers, bushing, and gasket.
4. Remove two nuts (18), screws (19), lockwashers (18), and connector(20) from cover (17). Discard lockwashers.

c. CLEANING AND INSPECTION

WARNING

Dry cleaning solvent, P-D-680, is toxic and flammable. Always wear protective goggles and gloves, and use only In a well-ventilated area. Avoid contact with skin, eyes, and clothes, and DO NOT breathe vapors. DO NOT use near open flame or excessive heat. The solvent's flash point is 100°F-138°F (38°C-59°C). If you become dizzy while using cleaning solvent, immediatety get fresh air and medical help. If solvent contacts eyes, Immediately wash your eyes and get medical aid.

1. Clean metal parts with dry cleaning solvent.
2. Inspect metal parts for damage.
3. Inspect wiring harness for broken wires end damaged Insulation.

d. ASSEMBLY

1. Install connector (20) to cover (17) with two screws (19), new lockwashers (18), and nuts (18).
2. Install new gasket (6), new bushing (5), connector (4), cover (3), and terminal lugs (9) to cover (17) with four screws (1), new lockwashers (2), and nuts (14).
3. Position retaining nut (10) over wires (15) and connect wires to connectors (4 and 20).
4. Install retaining nut (10) to rear of connector (4).

e. INSTALLATION

1. Install distribution box (11) to front dolly with four washers (12) and screws (13).
2. Install cover (17) to distribution box (11) with ten new lockwashers (7) and screws (8).

FOLLOW-ON TASKS

- Connect intervehicular cable to distribution box and towing vehicle (pare 2-14).
- Check operation of lights.

4-20. REAR DISTRIBUTION BOX MAINTENANCE (M689 AND M840).

This Task Covers:

a. Removal
b. Disassembly
c. Cleaning and Inspection
d. Assembly
e. Installation

Initial Setup:

Equipment Conditions:

- Intervehicular cable disconnected from towing vehicle and distribution box (para 2-11).

Tools/Test Equipment

- General mechanic's tool kit
- Common no. 1 shop set

Materials/Parts:

- Solder (Item 13, Appendix E)
- Dry cleaning advent (Item 14, Appendix E)
- Marker tags (Item 16, Appendix E)
- One bushing
- Two gaskets
- Twenty-two lockwashers

a. REMOVAL

1. Remove tan screws (8), lockwashers (9), and cover (7) from rear distribution box (12). Discard lockwashers.

2. Remove four screws (15), lockwashers (13), washers (14), and rear distribution box (12) from rear doily.

b. DISASSEMBLY

1. Remove retaining nut (11) from rear of connector (4).

2. Tag and disconnect wires of branched wiring harness (18) from connectors (4 and 23).

3. Remove branched wiring harness (18) and grommet (17) from cover (7).

4. Remove four nuts (10), screws (1), lockwashers (2), cover (3), connector (4), bushing (5), and gasket (6) from cover (7). Discard lockwashers, bushing, and gasket.

5. Remove four nuts(16), screws (21), lockwashers (20), connector (23), cover(22), and gasket (19)from cover(7). Discard lockwashers and gasket.

c. CLEANING AND INSPECTION

WARNING

Dry cleaning solvent P-D-680, is toxic and flammable. Always wear protective goggles and gloves, and use only in a well-ventilated area. Avoid contact with skin, eyes, and clothes, and DO NOT breathe vapors DO NOT use near open flame or excessive heat. The solvent's flash point is 100°F-138°F (38°C-59°C). If you become dizzy while using cleaning solvent immediately get fresh air and medical help. If solvent contacts eyes, immediately wash your eyes and get medical aid.

1. Clean metal parts with dry cleaning solvent.

4-20. REAR DISTRIBUTION BOX MAINTENANCE (M689 AND M840) (Con't).

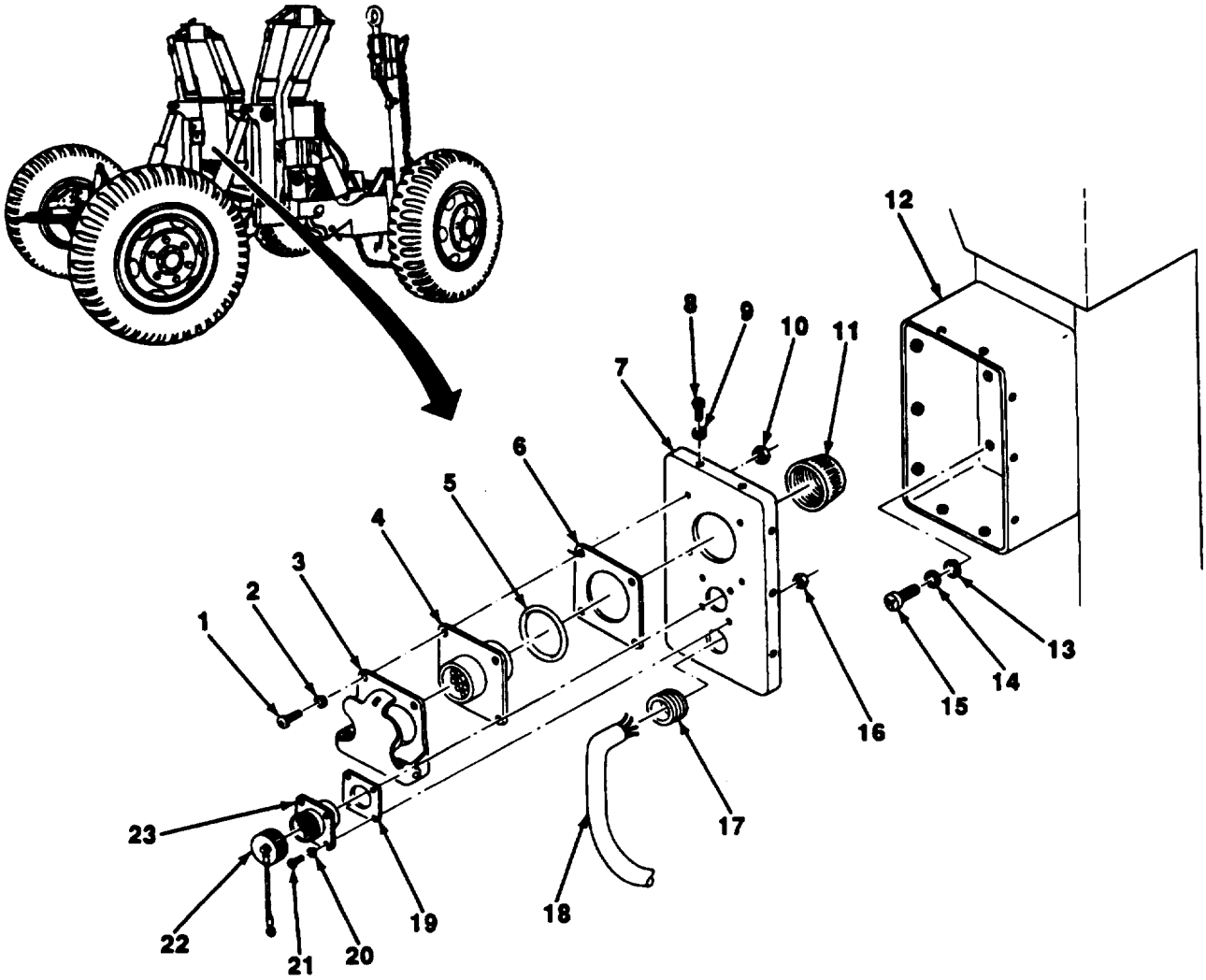

2. Inspect metal parts for damage.

3. Inspect branched wiring harness for broken wires and damaged insulation.

4-20. REAR DISTRIBUTION BOX MAINTENANCE (M689 AND M840) (Con't).

d. ASSEMBLY

1. Install new gasket (19), connector (23), and cover (22) to cover (7) with four,screws (21), new lockwashers (20), and nuts (16).

2. Install new gasket (6), new bushing (5), connector (4), and cover (3) to cover (7) with four screws (1), new lockwashers (2), and nuts (lo).

3. Install grommet (17) and branched wiring harness (18) into front of cover (7) and position retaining nut (11) over branched wiring harness.

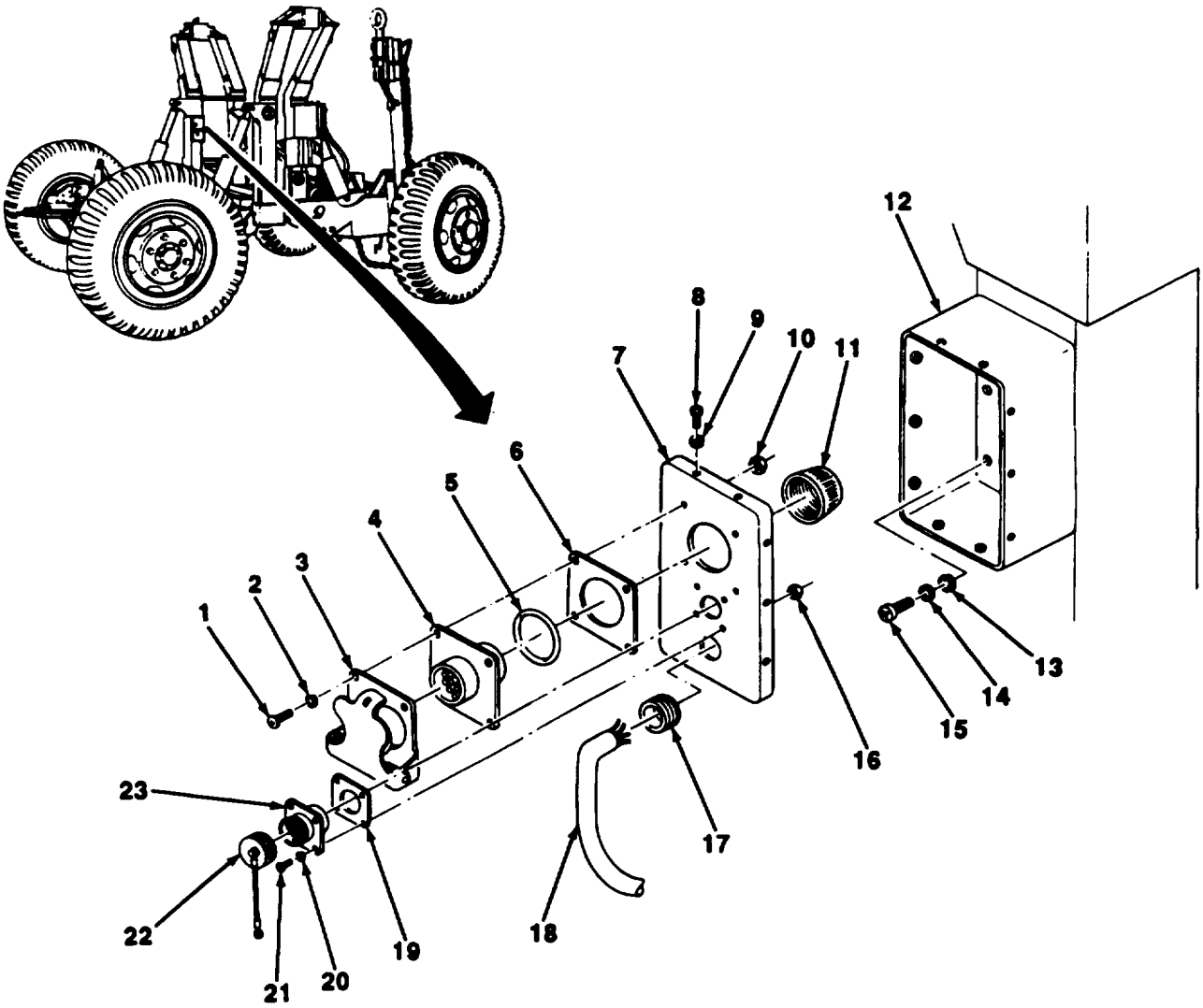

4-20. REAR DISTRIBUTION BOX MAINTENANCE (M689 AND M840) (Con't).

4. Connect wires of branched wiring harness (18) to connectors (4 and 23).

5. Install retaining nut (11) to rear of connector (4).

e. INSTALLATION

1. Install rear distribution box (12) on rear dolly with four washers (14), new lockwashers (13), and screws (15).

2. Install cover (7) on rear distribution box (12) with ten new lockwashers (9) and screws (8).

FOLLOW-ON TASKS:

- Connect intervehicular cable to distribution box and towing vehicle (para 2-14).
- Check operation of lights.

4-21. REAR DISTRIBUTION BOX MAINTENANCE (M832).

This Task Covers:

a. Removal
b. Disassembly
c. Cleaning and Inspection
d. Assembly
e. Installation

Initial Setup:

Equipment Conditions:

- Intervehicular cable disconnected from towing vehicle distribution box (pare 2-11).

Tools/Test Equipment:

- General mechanic's tool kit
- Common no. 1 shop set

Materials/Parts

- Solder (item 13, Appendix E)
- Dry cleaning solvent (item 14, Appendix E)
- Marker tags (Item 16, Appendix E)
- One bushing
- Two gaskets
- Sixteen lockwashers

a. REMOVAL

1. Remove eight screws (8), lockwashers (9), and cover (7) from rear distribution box (13). Discard lockwashers.
2. Remove four screws (12), washers (15), rear distribution box (13), and spacer (14) from rear dolly.

b. DISASSEMBLY

1. Remove retaining nut (11) from rear of connector (4).
2. Tag and disconnect wires of branched wiring harness (18) from connectors (4 and 23).
3. Remove branched wiring harness (18) and grommet (17) from cover (7).
4. Remove four nuts (10), screws(1), lockwashers (2), cover (3), connector (4), bushing (5), and gasket (6) from cover (7). Discard lockwashers, bushing, and gasket.
5. Remove four nuts (16), screws (21), lockwashers (20), connector (23), cover (22), and gasket (19) from cover (7). Discard lockwashers and gasket.

4-21. REAR DISTRIBUTION BOX MAINTENANCE (M832) (Con't).

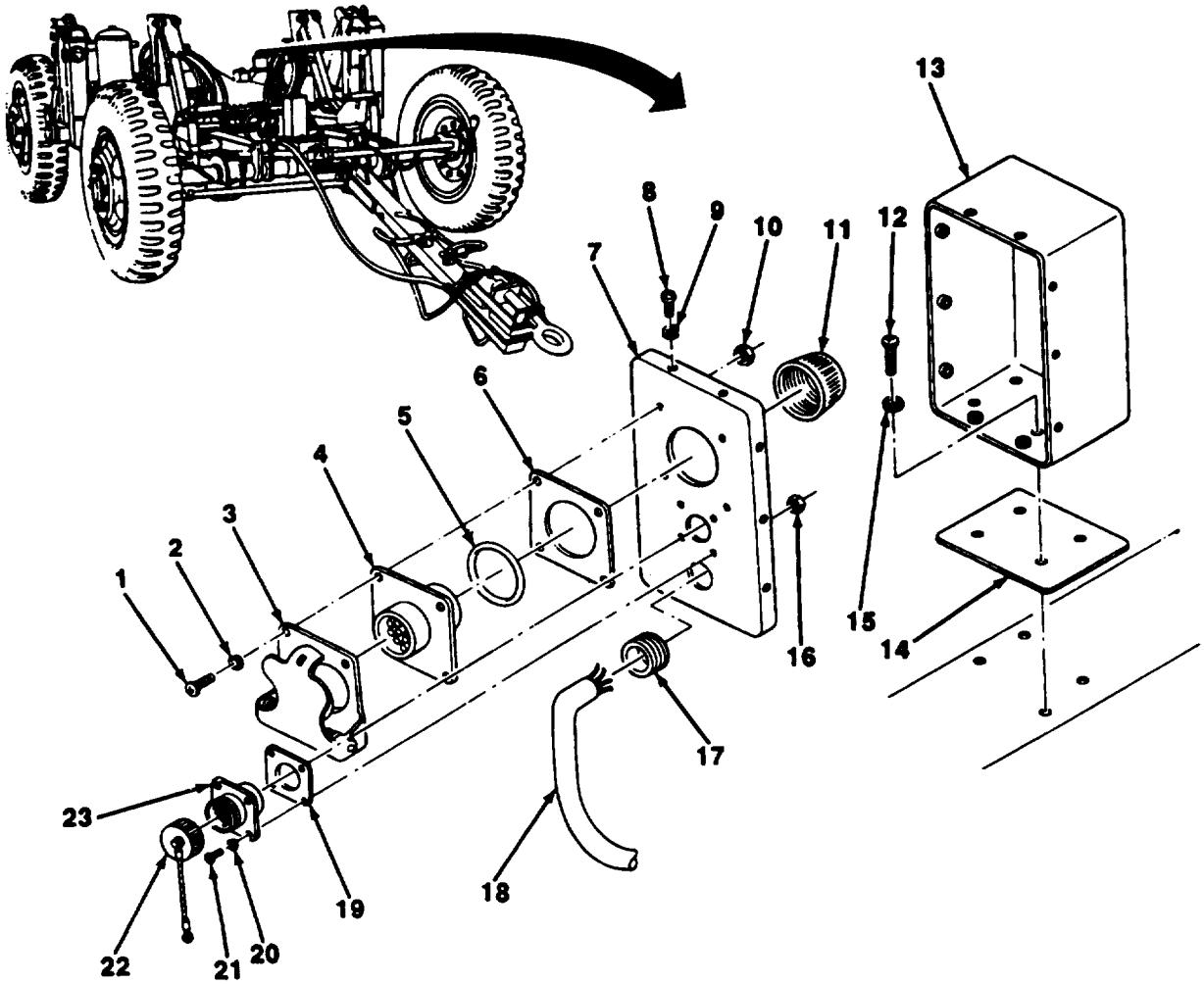

c. CLEANING AND INSPECTION

WARNING

Dry cleaning solvent P-D-680, is toxic and flammable. Always wear protective goggles and gloves, and use only in a well-ventilated area Avoid contact with skin, eyes, and clothes and DO NOT breathe vapors. DO NOT use near open flame or excessive heat The solvent's flash point Is 100°F-138°F (38°C-59°C). If you become dizzy while using cleaning solvent, immediately get fresh air and medical help. If solvent contacts eyes, immediately wash your eyes and get medical aid.

1. **Clean metal parts with dry cleaning solvent.**

4-21. REAR DISTRIBUTION BOX MAINTENANCE (M832) (Con't).

2. Inspect metal parts for damage.

3. Inspect branched wiring harness for broken wires and damaged insulation.

d. ASSEMBLY

1. Install new gasket (19), connector (23), and cover (22) to cover (7) with four screws (21), new lockwashers (20). and nuts (16).

2. Install new gasket (6), new bushing (5), connector (4), and cover (3) to cover (7) with four screws (1), new lockwashers (2), and nuts (10).

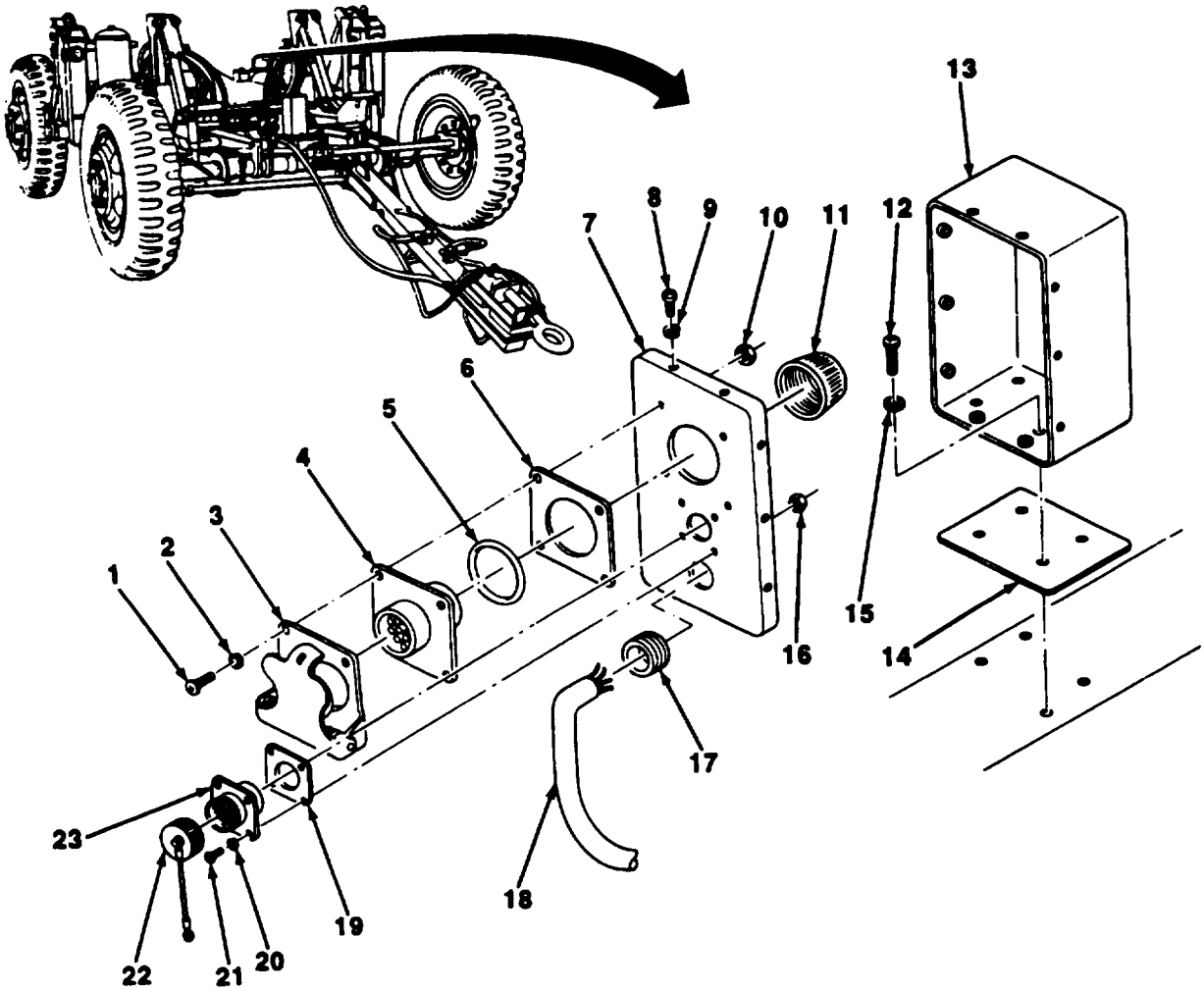

4-21. REAR DISTRIBUTION BOX MAINTENANCE (M832) (Con't).

3. Install grommet (17) and branched wiring harness (18) into front of cover (7) and position retaining nut (11) over branched wiring harness
4. Connect wires of branched Wiring harness (18) to connectors (4 and 23).
5. install retaining nut (11) to rear of connectors (4).

e. INSTALLATION

1. Install rear distribution box (13) and spacer (14) to rear doliy with four washer (15) and screws (12).
2. instaii cover (7) to rear distribution box (13) with eight new iockwashers (9) and straws (8).

FOLLOW-ON TASKS:

- Connect intervehicular cable to distribution box and towing vehicular (para 2-14),
- Check operation of lights.

4-22. STOPLIGHT-TAILIGHT MAINTENANCE (M689).

This Task Covers:

a. Lamp Replacement
b. Removal
c. Installation

Initial Setup:

Equipment Conditions:

- Intervehicular cable disconnected from towing vehicle distribution box (para 2-11).

Tools/Test Equipment:

Ž General mechanic's tool kit

Materials/Parts:

- Marker tags (Item 16, Appendix E)
- Two lockwashers

a. LAMP REPLACEMENT

1. Loosen six screws (8) and remove lens (7) from body (3).
2. inspect preformed packing (5) for damage. If damaged, remove and discard.
3. Remove lamp *(8)* and two lamps (4) from body (3) by pushing In and turning counterclockwise.
4. Install lamp (8) and two *lamps* (4) *Into body (3)* by pushing in and turning clockwise.
5. If removed, install new preformed packing (5) in lens (7).
6. install lens (7) on body (3) and tighten six screws (6)

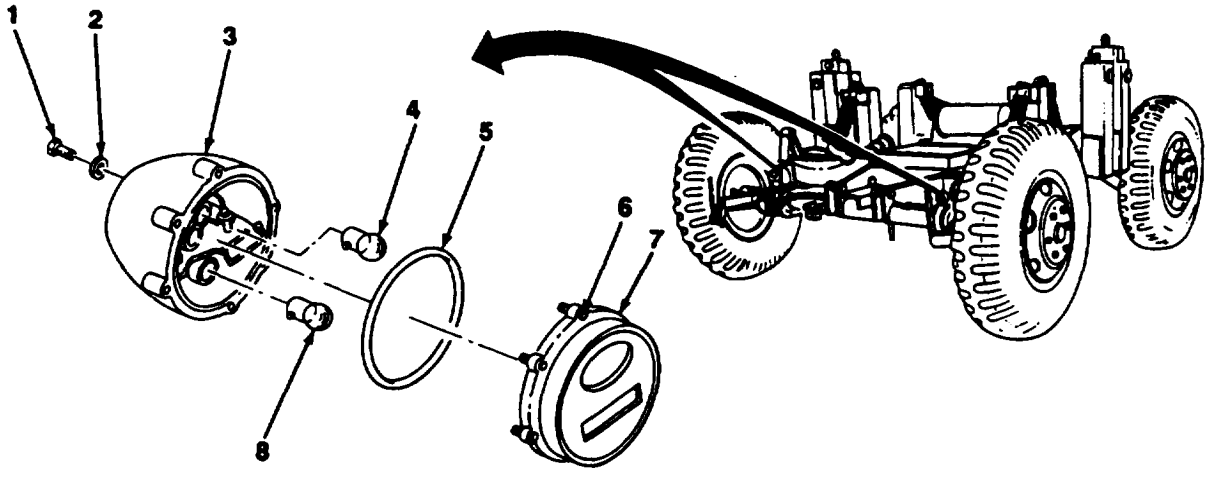

4-22. STOPLIGHT-TAILIGHT MAINTENANCE (M689).

b. REMOVAL

1. Tag and disconnect wires of body (3) from branched wiring harness.
2. Remove two screws (l), lockwashers (2), and body (3) from rear doily. Discard lockwashers.

c. INSTALLATION

1. Install body (3) on rear dolly with two new lockwashers (2) and srews (1).
2. Connect wires of body (3) to branched wiring harness.

FOLLOW-ON TASKS:

- Connect intervehicular cable to towing vehicle (para 2-14).
- Check Operation of light.

4-23. BLACKOUT STOPLIGHT REPLACEMENT (M689).

This Task Covers:

a. Removal
b. Disassembly
c. Assembly
d. Installation

Initial Setup:

Equipment Conditions:

- Dolly parked on level surface with handbrakes applied (pars 2-2).

Tool/Test Equipment:

- General mechanic's tool kit

NOTE

- This paragraph applies to the M689 only.
- If only replacing the lamp, the stoplight doss not have to be removed from vehicle. Perform disassambly and assembly procedures only.

a. REMOVAL I

1. Disconnect and remove wiring harness connectors from blackout stoplight (1).
2. Remove bolt (6), blackout stoplight (1), and attached wiring from mounting bracket.

[b. DISASSEMBLY]

1. Remove two bolts (5), retainer lens (2), and gasket (3) from blackout stoplight (1) housing. Discard gasket.
2. Push in on lamp (4) and turn counterclockwise to remove.

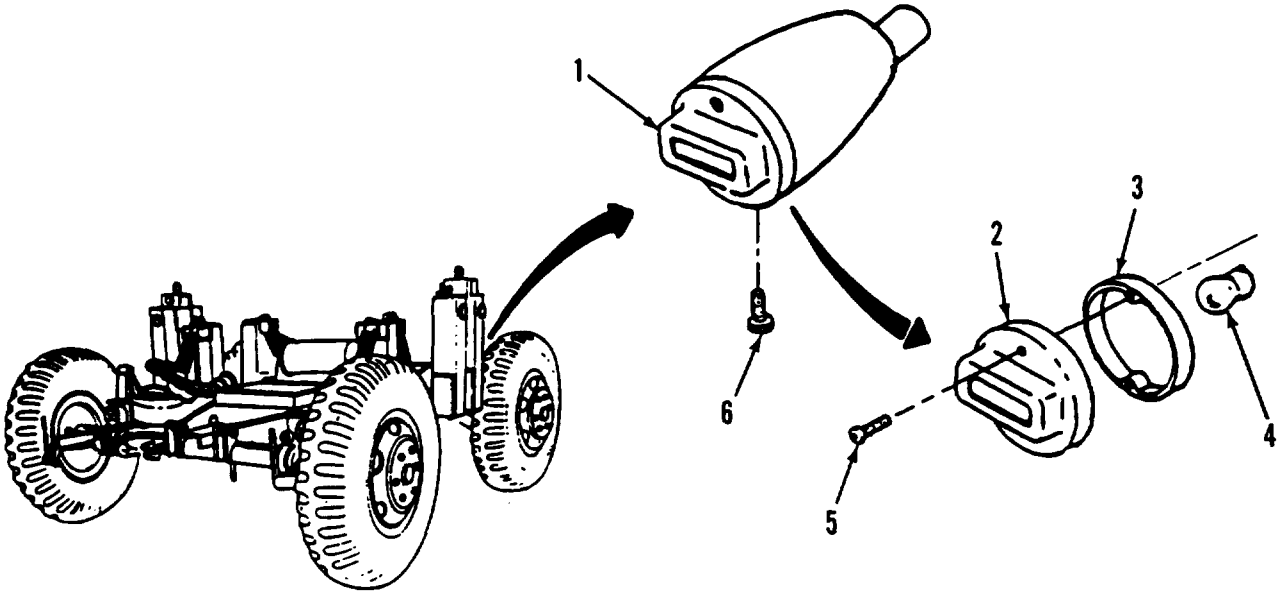

4-23. BLACKOUT STOPLIGHT REPLACEMENT (M689) (Con't).

c. ASSEMBLY I

1. Insert lamp (4) in socket assembly, push in, and turn clockwise. Test lamp by turning on BLACKOUT switch in towing vehicle and depressing-brake pedal or signal-light lever.

2. Install new gasket (3) and retainer lens (2) on blackout stoplight(1) housing. Secure with two bolts (5).

d. INSTALLATION

1. Secure blackout stoplight (1) with bolt (6).

2. Connect attached wiring to wiring harness.

4-24. COMPOSITE STOPIGHT.TAILIGHT MAINTENANCE (M832 AND M840).

This Task Covers:

a. Lamp/LED Replacement
b. Removal
c. Installation

Initial Setup:

Equipment Conditions:

- Intervehicular cable disconnecteed from towing vehicle (para 2-11).

Tools/Test Equipment

- General mechanic's tool kit

Materials/Parts:

- Marker tags (Item 16, Appendix E)
- Four lockwashers

a. LAMP/LED REPLACEMENT I

NOTE

Discard and replace damaged lamps/LEDs only.

1. Loosen six screws (2) and remove door (1) from body (6).
2. Inspect preformed packing (3) for damage. Discard if damaged.
3. Remove two lamps (4 and 5) and two lamps(14) by pushing in and turning counterclockwise.

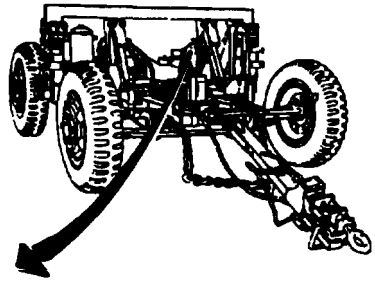

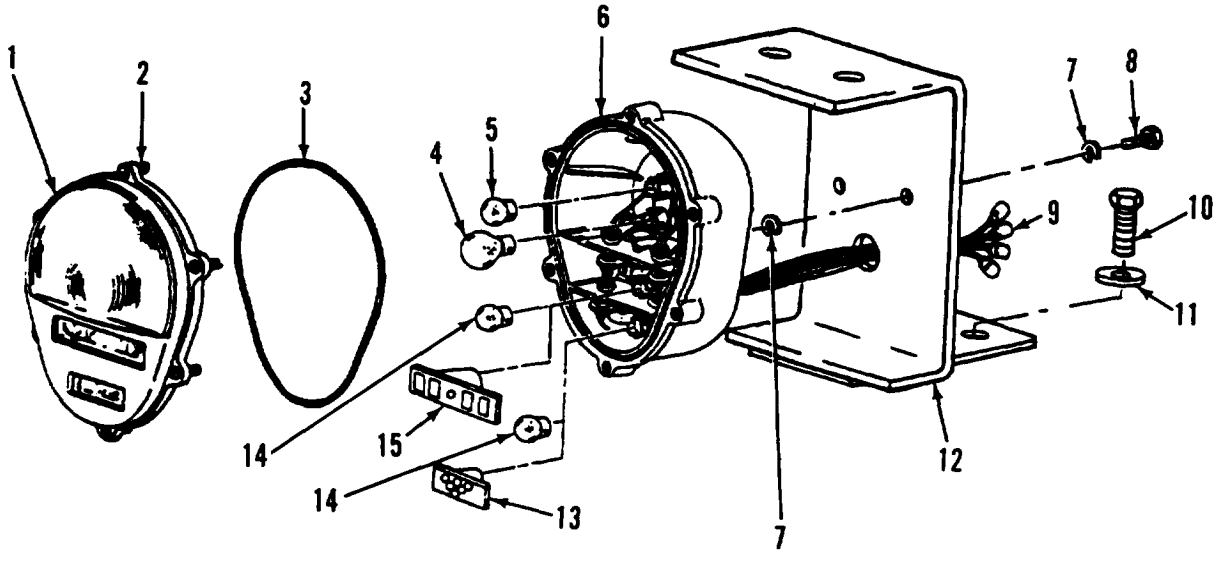

4-24. COMPOSITE STOPLIGHT-TAILIGHT MAINTENANCE (M832 AND M840) (Con't).

4. Install two lamps (4 and 5) and two lamps (14) by pushing in and turning clockwise.

5. To remove LED (15), insert a small flat-tipped screwdriver into slot inside center hole of LED. Firmly push in LED, turn counterclockwise slightly, and remove LED.

6. To remove LED (13), insert a small flat-tipped screwdriver into slot on left sided LED. Remove cover, allowing access to slot in center hole. Firmlv push in LED with screwdriver in center hole slot, turn counterclockwise slightly, and remove LED.

7. Install two LEDs (13 and 15) by snapping into place with hand aplication.

8. If removed, install new preformed packing (3) in door (l).

9. Install door (1) on body (6) and tighten six screws (2).

b. REMOVAL

1. Tag and disconnect four connectors (9) from branched wiring harness.

2. Remove two screws (8), four lockwashers (7), and body (6) from rear dolly. Discard lockwashers.

3. Remove two screws (1O), four washers(11), and composite light bracket(12) from rear axle.

4. Inspect bracket (12) for wear or damage. Discard if damaged.

c. INSTALLATION

NOTE

If composite light bracket was discarded and replacement bracket has no holes, see Appendix G for fabrication instructions.

1. Install two screws (10), four washers (11), and bracket (12) on rear axle.

2. Install body (6) on rear doily with four new lockwashers (7) and two screws (8).

3. Connect four connectors (9) to branched wiring harness.

FOLLOW-ON TASKS:

- Connect intervihcular cable to towing vehicle (para 2-14).
- Check operation of light.

4-25. BRANCHED WIRING HARNESS REPLACEMENT.

This Task Covers:

a. Removal

b. Installation

Initial Setup:

Equipment Conditions:

- Intervehicular cable disconnected from towing vehicle distribution box (para 2-11).
- Branched wiring harness removed from rear distribution box (para 4-20 or 4-21).

Materials/Parts:

- Marker tags (Item 16, Appendix E)
- Nine lockwashers

ToolslTest Equipment:

- General mechanic's tool kit

NOTE

- Replacement of branched wiring harness is similar for all dolly sets. Length of branched wiring harness will vary with each dolly set.
- Branched wiring harnesses and distribution boxes are available combined as an assembly.

a. REMOVALI

1. Tag wires (1) on rear lights (8) and branched wiring harness (1 O) if identification bands are missing or not legible.

2. Disconnect connectors (11) of branched wiring harness (1O) from wires (1) of rear lights (8).

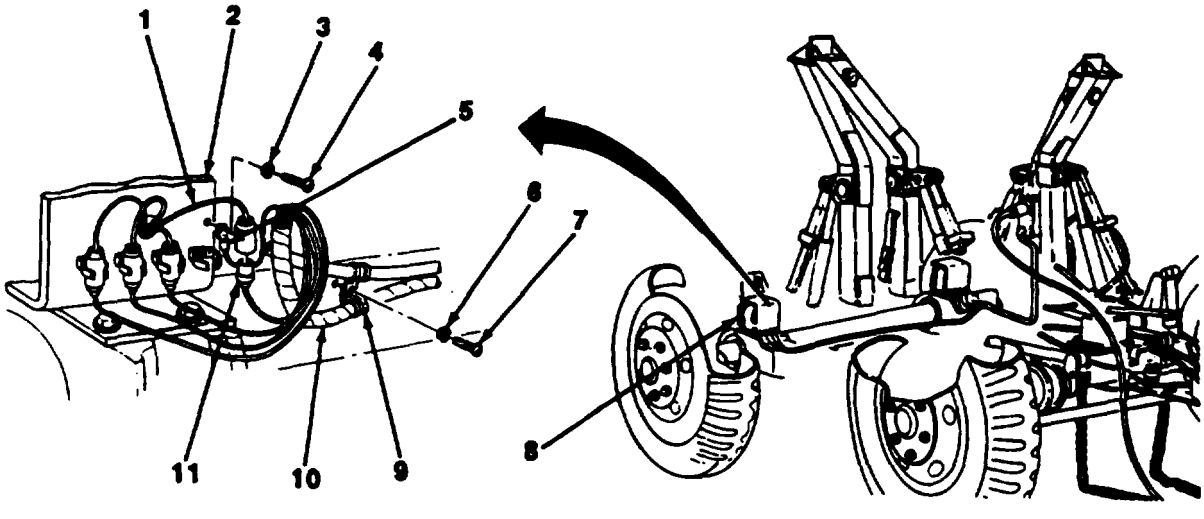

4-25. BRANCHED WIRING HARNESS REPLACEMENT.

NOTE

There are two ground wires at roadside rear light and one ground wire at curbside rear light.

3. Remove three screws (4), lockwashers (3), and ground wires (5) of branched wiring harness (10) from light brackets (2). Discard lockwashers.

NOTE

Clamps holding brake lines are also removed when branched wiring harness clamps are removed.

4. Remove six screws (7), lockwashers (8), and clamps (9) from rear dolly. Discard lockwashers.

5. Remove branched wiring harness (10) from rear dolly.

[b. INSTALLATION I

1. Position branched wiring harness (10) to rear dolly.

2. Connect connectors (11) of branched wiring harness (10) to wires (1) of rear lights (8).

NOTE

There are two ground wires at roadside rear light and and ground wire at curbside rear light.

3. Connect three ground wires (5) of branched wiring harness (10) to light brackets (2) with three new lockwasshers (3) and screws (4).

NOTE

Clamps holding brake lines are also Installed when branchedwlrlngharness clamps are installed.

4. Install branched wiring harness (10) to rear dolly with six clamps (9), new lockwashers (6), and screws (7).

FOLLOW-ON TASKS:

- Install branched wiring harness to rear distribution box (para 4-20 or 4-21).
- Connect Intervehicular cable 10 distribution box and towing vehicle (para 2-14).
- check operation of lights.

4-26. WIRING DIAGRAMS.

NOTE

- This paragraph contains dolly set wiring diagrams. Refer to these diagrams when performing electrlcal troubleshooting and when performing eletrical maintenance.
- For Information on manufacturlng wlres, refer to Appendix G.

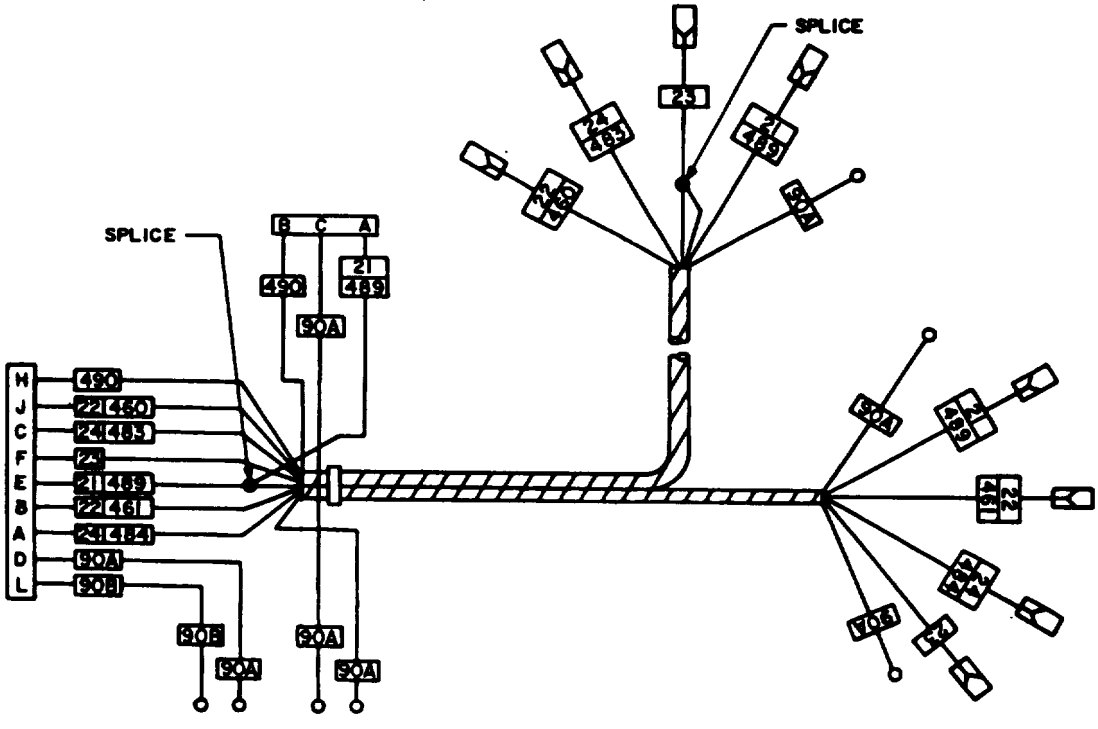

BRANCHED WIRING HARNESS (COMPOSITE STOPLIGHT-TAILLIGHT

4-26. WIRING DIAGRAMS (Con't).

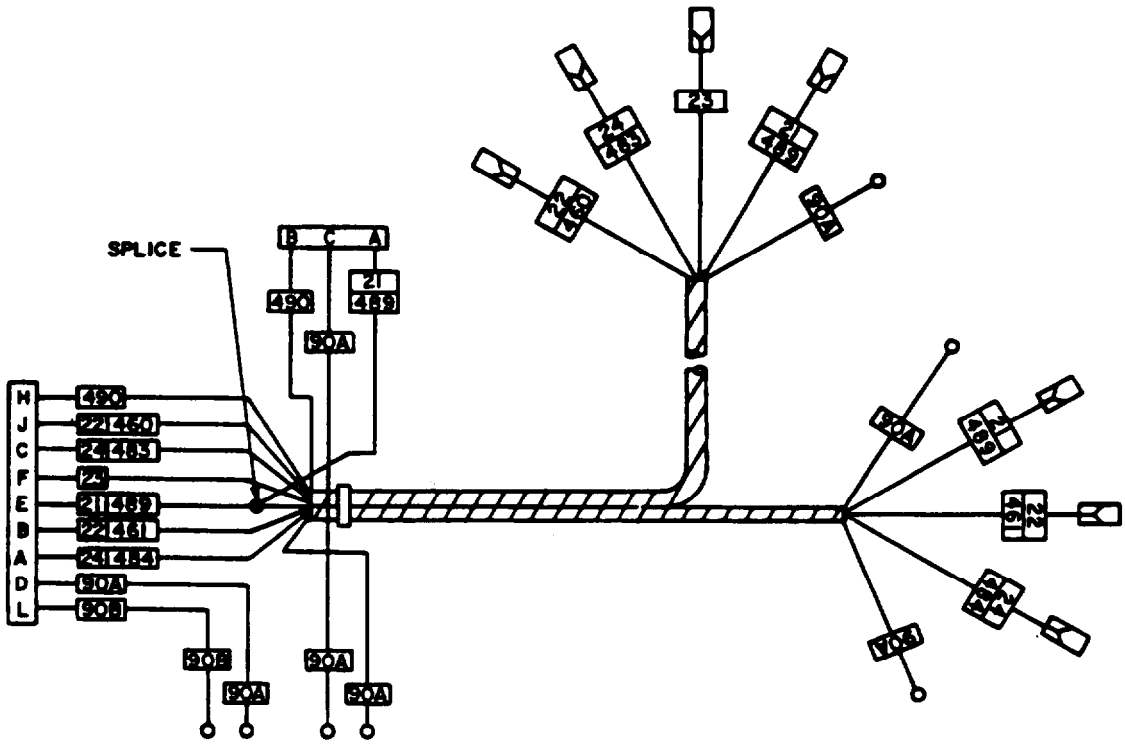

BRANCHED WIRING HARNESS (STOPLIGHT-TAILLIGHT)

Section VII. FRONT AXLE MAINTENANCE

Paragragh Title	Page Number
Connecting Link Replacement	4-62
Front Axle Replacement	4-60
Safety Chains, Mounting Bracket, and Shroud Replacement	4-69
Steering Knuckle Replacement	4-71
Tie-rod Replacement	4-66
Wheel Alinement	4-75

4-27. FRONT AXLE REPLACEMENT.

This Task Covers:

a. Removal
b. Inspection
c. Installation

Initial *Setup:*

Equipment Condition

Ž Connecting link removed (para 4-28).
- Brakeshoes removed (para 4-37).
- Hydraulic brake lines and fitings removed (para 4-40).
- Hydraulic pump removed (M832 except SN J089-001 thru 159 and J017-160 thru 350) (para 4-75).
- Hydrauic pump removed (M832 SN J089-001 thru 159 and J017-160 thru 350 only) (para 4-78).
- Hydraulic pump removed (M840) (para 4-81).
- Power cluster removed (para 4-39).
- Safety chains and shroud removed (para 4-30).

Ž Steering knuckles removed (para 4-31).
- Alining rods disconnected (para 4-65).
- Front stablizer bar removed (M832) (para 4-67).

Materials/Parts:

ŽGrease (Item 7, Appendix E)
- Twelve lockwashers

Tool/Test Equipment:

- General mechanic's tool kit
- Common no. 1 shop set

Personnel Required: Two

a. REMOVALI

1. While supporting dolly, remove eight screws(8) and lockwashers (9), twotiunnioncaps (7), andfront axle (1) from dolly. Discard lockwashers.

2. Remove four nuts (4), lockwashers (3), bolts (6), and trunnion bearings (2) from front axle (l). Discard lockwashers.

b. INSPECTION

Measure inside diameters of two axle bushings (5). If diameter measures more than 1.449 in. (36.80 mm), replace axle bushings.

4-27. FRONT AXLE REPLACEMENT (Con't).

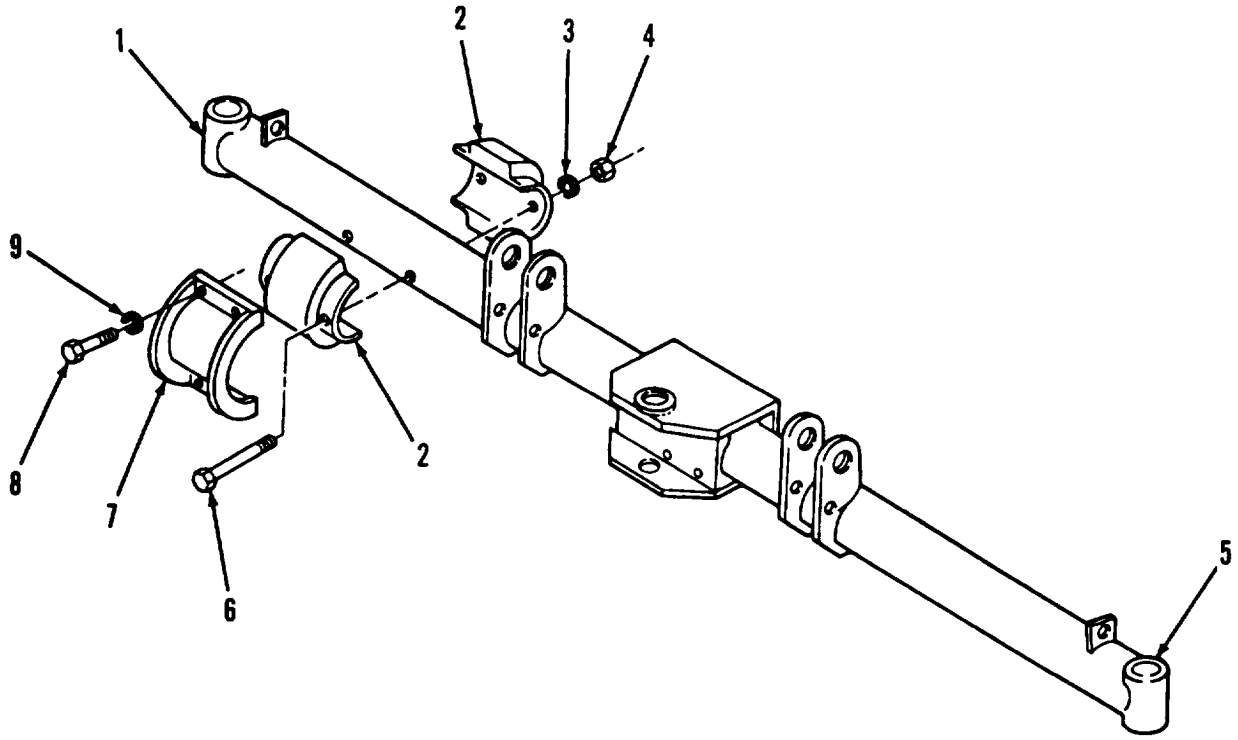

Ic. INSTALLATION

1. Install four trunnion bearings (2) on front axle (1) with four bolts (6), new lockwashers (3), and nuts (4).

2. Install front axle (1) on dolly with two trunnion caps (7) and eight new lockwashers (9) and screws (8).

3. Apply grease to two axle bushings (5).

FOLLOW-ON TASKS:

. Install front stabilizer bar (M832) (para 4-67).
• Connect alining rods (para 4455).
. Install steering knuckles (para 4-31).
. Install safety chains and shroud (para 4-30).
• install power duster (para 4-39).
• Install hydraulic pump *(M832* except SN J089-001thru 159 and J017-160 thru 350) (para 4-75).
• Install hydmuic pump (M832 SN J089-001 thru 159 and J01 7-160 thru 350 only) (para 4-78).
• Install hydrauiic pump (M840) (para 4-81).
• Install hydraulic brake lines and fitings (para 4-40).
• Install brakeshoes (para 4-37).
. Install connecting fink (para 4-28).
• Adjust steering stops (M832 SN J089-001 thru 159 and J01 7-160 thru 350 only) (para 4-71).

4-28. CONNECTING LINK REPLACEMENT

This Task Covers

a. Removal
b. cleaning and Inspection
c. Installation

Initial Setup:

Equipment Conditions:
- Drawbar removed (para 4-54).
- Tie-rods removed (para 4-29).

Tool/Test Equlpment
- General mechanic's tool kit
- common no. 1 shop set

Materials/Parts
- Grease (Item 7, Appendix E)
- Dry cleaning solvent (Item 14, Appendix E)
- Three lockwashers
- Four locknuts

[a. REMOVALI

NOTE
- Porfotm steps 1 through 5 for M689.
- Perform steps 6 through 10 for M832 and M840.

1. Remove four locknuts (13), screws (2), and bracket (3) from bracket support (1). Discard locknuts.
2. Remove two screws (4), lockwashers (5), and bracket support (1). Dlacard lockwasher.
3. Remove screw (6), lockwasher (7), and pin (8). Discard lockwasher.

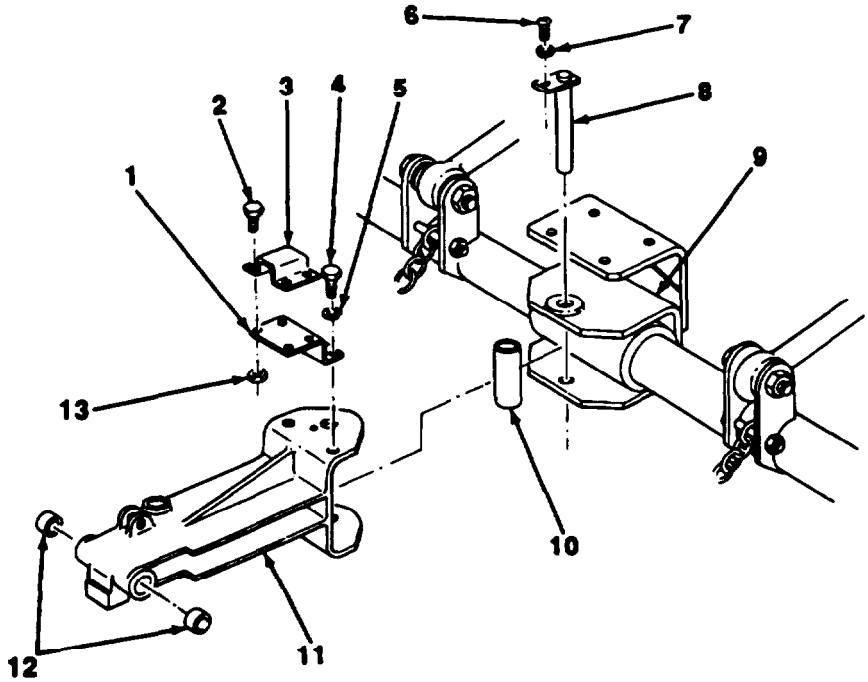

M689

4-28. CONNECTING LINK REPLACEMENT (Con't).

4. Remove connectingllnk(11) and spacer sleeve (10) from front axle *(9).*
5. If damaged, press two bearing sleeves (12) out from connecting link (11). Discard bearing sleeves.
6. Remove lanyard assembly (24) from connecting link (25).
7. Remove four locknuts (26), screws (15), and bracket(16) from bracket support (14). Discard locknuts.
8. Remove two screws (17), lockwashers (18), and bracket support (14). DIscard lockwashers.
9. Remove screw (19), lockwasher (20), and pin (21). Discard lockwasher.
10. Remove connecting link (25) end spacer sleeve (23) from front axle (22).

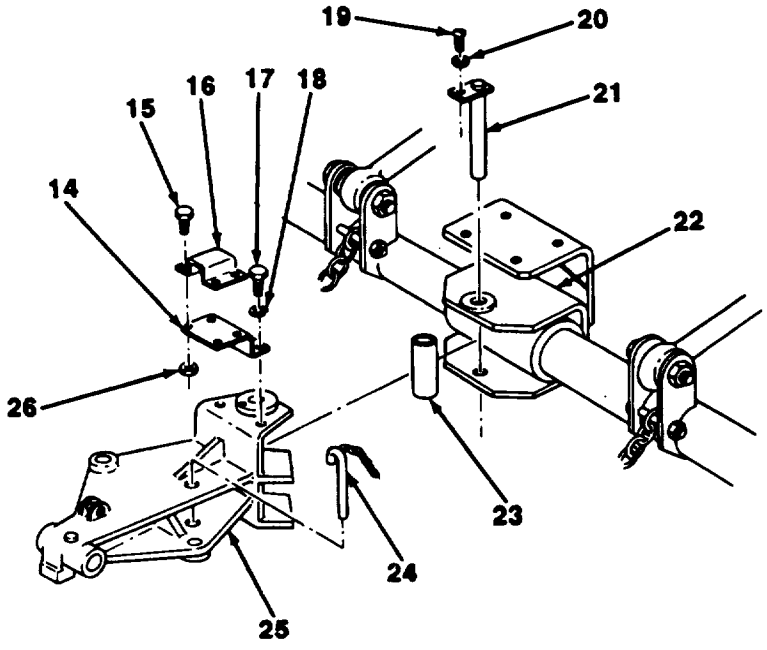

M832 AND M840

4-28. CONNECTING LINK REPLACEMENT (Con't).

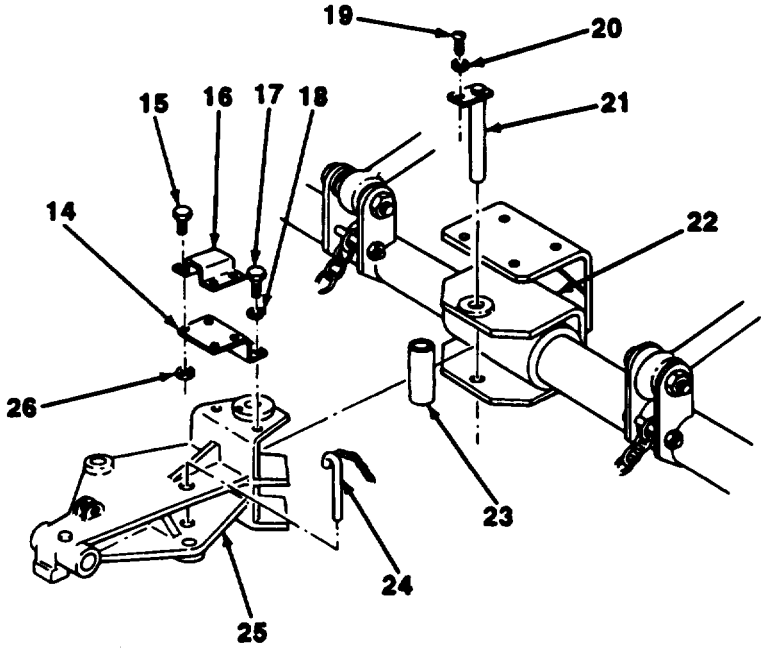

M832 AND M840

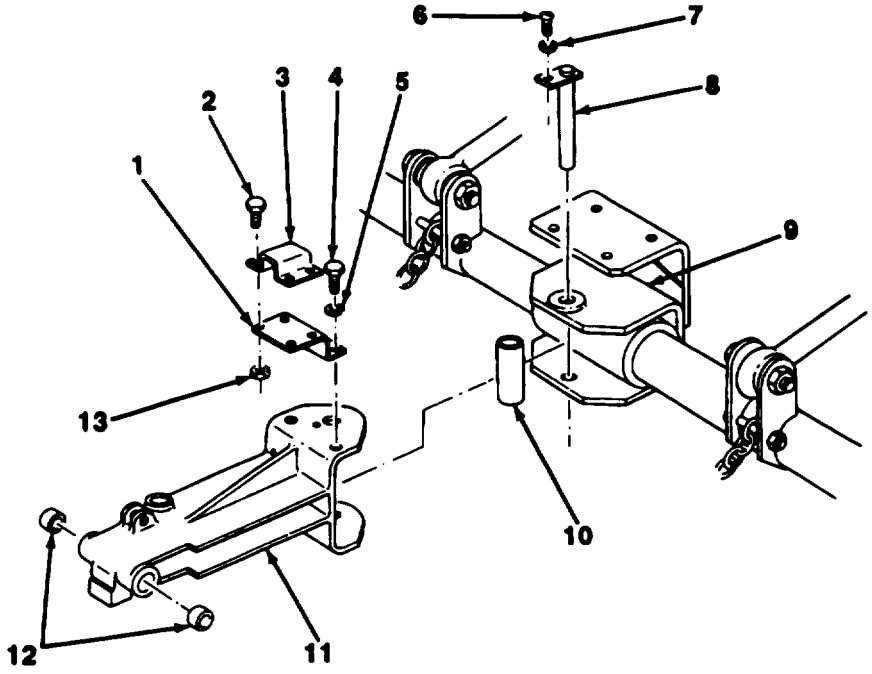

M689

4-28. CONNECTING LINK REPLACEMENT (Con't).

b. CLEANING AND INSPECTION

WARNING

- Dry cleaning solvent P-D-680, is toxic and flammable. Always wear protective goggles and gloves and use olny in a well-ventilated area. Avoid contact with skin, eyes, end clothes, end DO NOT breathe vapors. DO NOT use near open flame or excessive heat. The solvent's flash point is 100°F-138F (38°C-59°C). If you become dizzy while using cleaning solvent immediately get freshh air end medical help. If solvent contacts eyes, Immedlatety wash your eyes and get medical aid.
- Compressed air used for cleaning or drying purposes, or for clearing restrictions, should never exceed 30 psi (207 kPa). Wear protective clothing (goggles/ahleld, gloves, etc.) and use caution to a void injury to personnel.

1. Clean all metal components with dry cleaning solvent. Dry with compressed air.
2. Inspect components for bends, clacks, and damaged threads. Replace if bent or cracked.
3. Inspect for excessive looseness or play between pin and front axle, and pin and connecting link. Replace components that are excessively worn.

c. INSTALLATION

NOTE

- perform steps 1 through 5 for M832 and M840.
- Perform steps 6 through 10 for M689.

1. Position connecting link (25) and spacer sleeve (23) on front axle (22).
2. Install pin (21) with new lockwasher (20) and screw (19).
3. Install bracket support (14) with two new lockwashers (18) and screws (17).
4. Install bracket (16) in bracket support (14) with four screws (15) and new locknuts (28).
5. Install lanyard assembly (24) to correcting link (25).
6. If removed, Install two new bearing sleeves (12) in connecting link (11). Apply grease to bearing sleeves.
7. Position connecting link (11) and spacer sleeve (10) on front axte (9).
8. Apply grease to pin (8) and Install pin with new lockwasher (7) and screw (6).
9. Install bracket support (1) with two new lockwashars (5) and screws (4).
10. install bracket (3) in bracket support (1) with four screws (2) and new locknuts (13).

FOLLOW-ON TASKS:

- Install tie-rods (para 4-29).
- Install drawbar (para 4-54).

4-29. TIE-ROD REPLACEMENT

This Task Cover:

a. Removal
b. Cleaning and Inspection
c. Installation

Inltial Setup:

Equlpment Conditions:

- Dolly eat parked on level suface with handbrakes applied (para 2-2).

Tools/Test Equipment:

- General mechanic's tool kit
- Common no. 1 shop set

Materials/Parts

- Grease (Item 7, Appendix E)
- ŽDrycleanlng Solvent (item14,Appendix E)
- Two cotter pins (M832and M840)
- Two lockwashers (M689)

NOTE

One end of each tie-rod has left-hand threads. Each dolly set has two tie-rods.

NOTE

- Perform steps 1 through 4 for M689.
- Perform steps 5 through 9 for M832 and M840.

1. Loosen nut (4) at each end of tie-rod (5).
2. Remove nut (7), lockwasher (6), and bolt (2) from each end of tie-rod (5) and remove tie-rod. Discard lockwashers.
3. Remove two tiered ends (3) and nuts (4) from tie-rod (5).
4. If damaged, remove grease fitting (1) from each tie-rod end (3). Discard greasa fittings.
5. Loosen nut (10) at each and tie-rod (11).
6. Remove cotter pin (13) at each and of tie-rod (11). Discard cotter pins.
7. Remove two nuts (14) and tie-rod (11).
8. Remove two tie-rod ends (9) and nuts (10) from tie-rod (11).
9. If grease fitting (8) is damaged, remove grease fitting and rubber boot (12) from each tie-rod end (9). Discard grease fittings.

4-29. TIE-ROD REPLACEMENT (Con't).

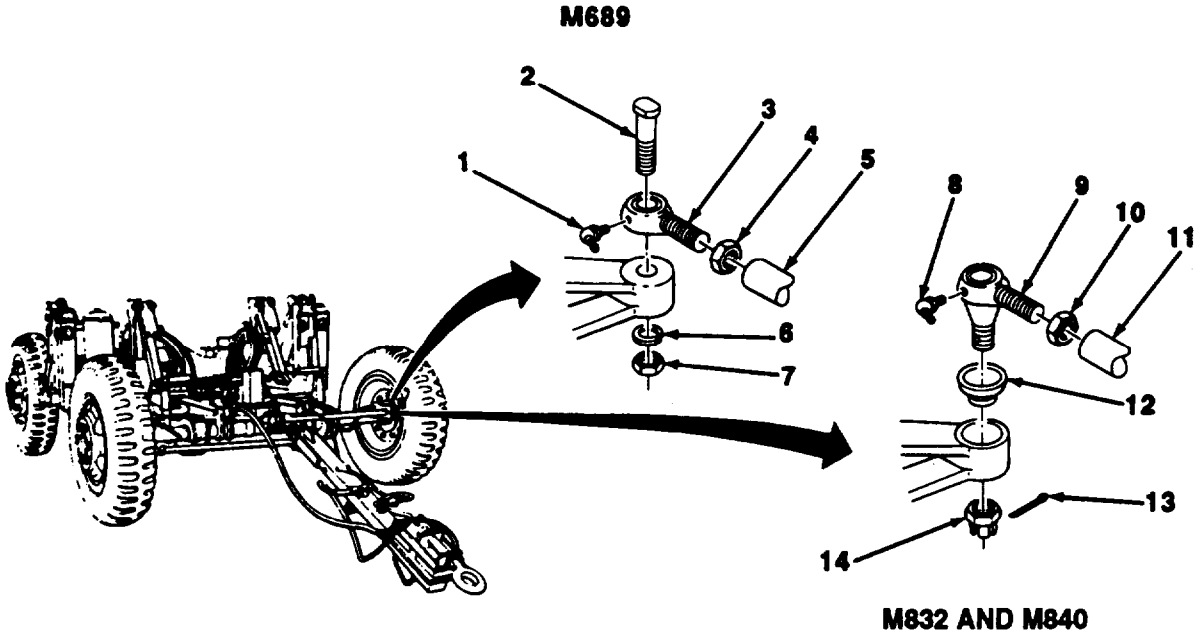

b. CLEANING AND INSPECTION

WARNING

- **Dry cleanlng solvent, P-D-680, is toxic and flammable. Always wear protective goggles end gloves, end use only in a well-ventilated area. Avoid contact with akin, eyes, and clothes, and DO NOT breathe vapors DO NOT use near open flame or excessive heat. The solvent's flash point is 100°F-138°F (38°C-60°C). If you become dizzy while using cleaning solvent, immediately get fresh alr and medical help. If solvent contacts eyes, Immediately wash your eyes and get medical aid.**
- **Compressed air used for cleaning or drylng purposes, or for clearing restrictions, should never exceed 30 psi (207 kPa). Wear protective clothlng (goggles/shield, gloves, etc.) and use caution to avoid injury to personnel.**

1. Clean all metal components with dry cleaning solvent. Dry with compressed air..
2. Inspect tie-rods for bends, cracks, and damaged threads. Replace tie-rods if bent, cracked, or if threads are damaged.
3. Inspect tie-rod ends for cracks, excessive looseness or play, wear, and damaged threads. Replace tie-rod ends if cracked, excessively loose, worn, or threads are damaged.
4. Inspect rubber boots for damage and deterioration. Replace rubber boots If damaged or deteriorated.

4-29. TIE-ROD REPLACEMENT (Con't).

c. INSTALLATION

NOTE

- Perform steps 1 through 4 for M832 and M840.
- Perform steps 5 through 7 for M689.

1. If removed, install new grease fitting (8) end rubber boot (12) to each tie-rod end (9).
2. Loosey install two tie-rod ends (9) and nuts (10) tie-rod(11).
3. Install tie-rod(11) with two nuts (14).
4. Install new cotter pin (13) in each end of tie-rod(11).

M689

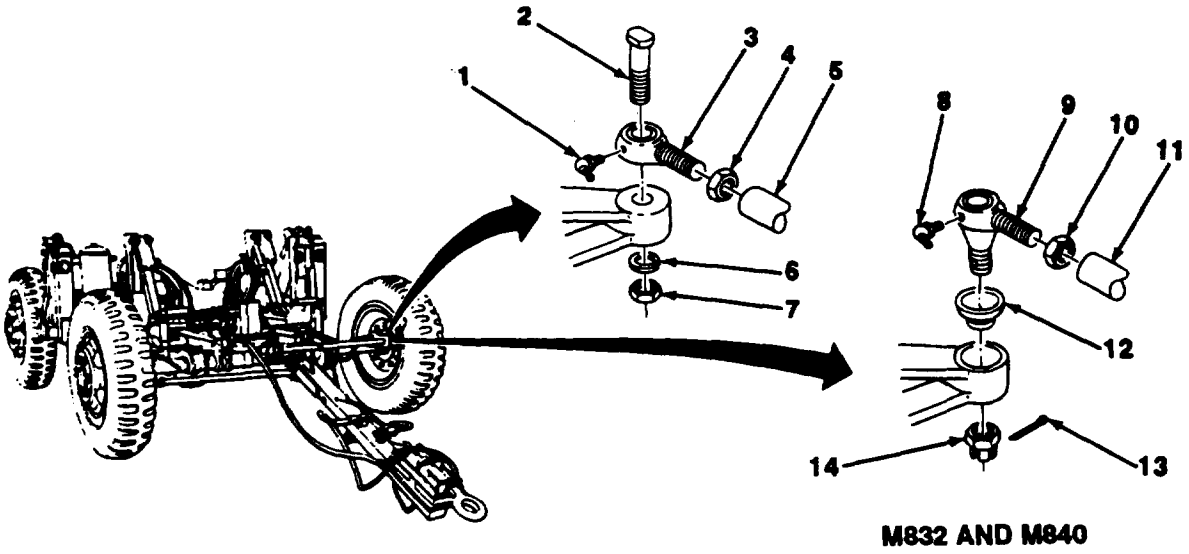

5. If removed, install new grease fitting (1) to each tie-rod end (3).
6. Loosely install two tie-rod ends (3) and nuts (4) to tie-rod (5).
7. install tie-rod (5) with two bolts (2), new lockwashers (6), and nuts (7).

FOLLOW-ON TASKS:

- Aline wheels (para 4-32).

4-30. SAFETY CHAINS, MOUNTING BRACKET, AND SHROUD REPLACEMENT.

This Task Covers:

a. Removal **b. Installation**

Initial Setup:

Equipment Conditions:

- Hydraulic pump removed (M832 except SN J089-001 thru 159 and JO17-160 thru 350) (para 4-75).
- Hydraulic pump removed (M832 SN J089-001 thru 159 and JO17-160 thru 350 only) (para 4-78).
- Hydaulic pump removed (M840) (para 4-81).
- Power cluster removed (para 4-39).

Materials/Parts:

- Two locknuts
- Five lockwashers (M840 and M832 except SN J089-001 thru 159 and J017-160 thru 350)
- Seven lockwashers (M832 SN J089-001 thru 159 and J017-160 thru 350 only)

Tools/Test Equipment:

- General mechanic's tool kit
- Common no. 1 shop set

a. REMOVAL

NOTE

On the M832 (SN J089-001 thru 159 and SN J017-160 thru 350), mounting bracket 11649058 has been replaced by mounting bracket 12436789.

1. Remove two locknuts (13), screws (9), and safety chains (10) from front axle (1). Discard locknuts.

2. Remove eyehook(11) and connecting link(12) from each safety chain (10).

NOTE

- To remove mounting bracket 12436788(8) on the M832(SN J089-001 thru 159 and SN J017-150 thru 350 only), perform steps 3 and 4.
- To remove mounting bracket 11648068 (2) on the M840 and M832 (except SN J089-001 thru 159 andJ017-160 thru 350), perform steps 4 and 5.
- To remove shroud from the M689, perform steps 6 and 7.

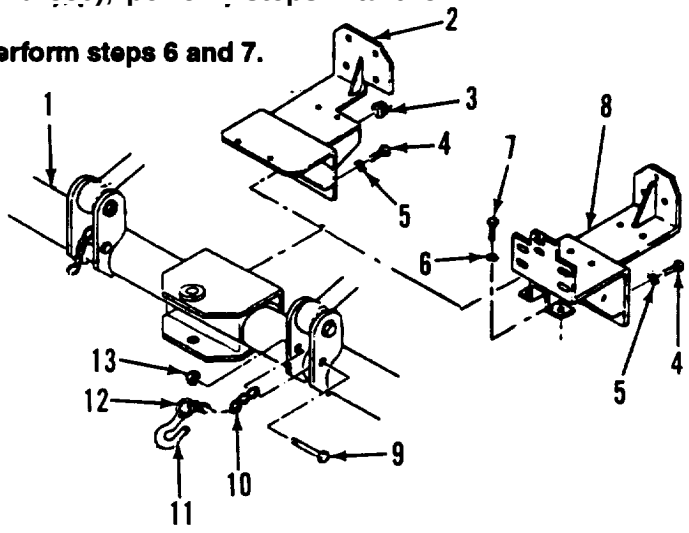

3. Remove two screws (7) and lockwashers (6) from front mount of mounting bracket (8). Discard lockwashers.

4. Remove five screws (4) and lockwashers (5) and mounting bracket (2) from front axle (1). Discard lockwashers.

5. Remove rubber grommet (3) from mounting bracket (2).

4-30. SAFETY CHAINS, MOUNTING BRACKET, AND SHROUD REPLACEMENT (Con't).

6. Remove five screws (16) and lockwashers (17) and shroud (14) from front axle (l). Discard lockwashers.

7. Remove rubber grommet (15) from shroud (14).

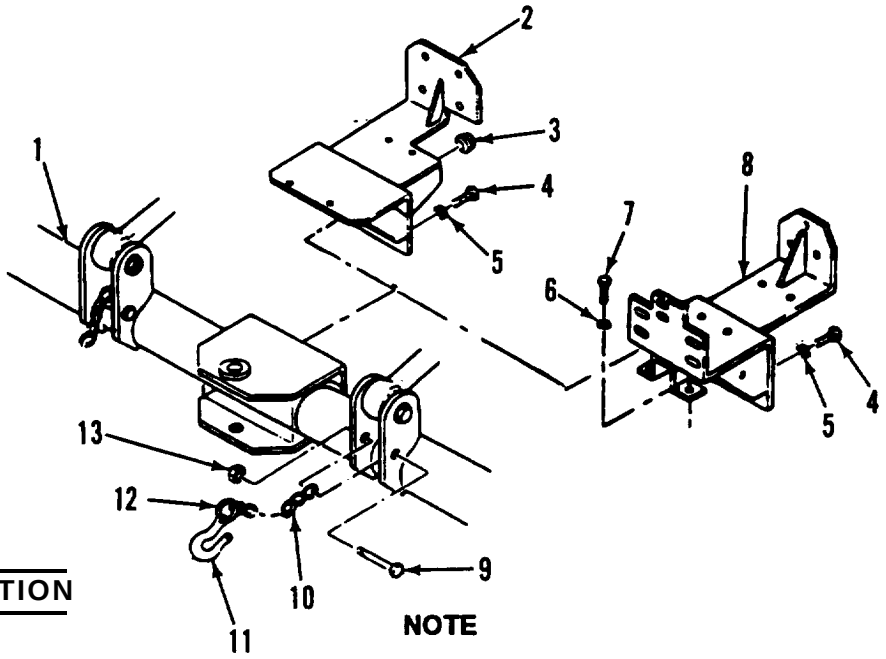

b. INSTALLATION

NOTE

- To install shroud (14) on the M689, perform steps 1 and 2.
- To Install mounting bracket 11848088(2) on the M840 and M832 (except SN J089-001 thru 159 and J017-160 thru 350), perform steps 3 and 4.
- To install mounting bracket 12436788(8) on the M832 (SN J089-001 thru 158 and J017-160 thru 350 only), perform steps 4 and 5.

1. Install rubber grommet (15) on shroud (14).

2. Install shroud (14) on front axle (1) with five new lockwashers (17) and screws (16).

3. Install rubber grommet (3) on mounting bracket (2).

4. Install mounting bracket (2) on front axle(1) with five new lockwashers (5) and screws (4).

5. Install two screws (7) and new lockwashers (6) on front mount of mounting bracket (8).

6. Install eyehook(11) on end of each safety chain (10) with connecting link (12).

7. Install two safety chains (10) on front axle (1) with two screws (9) and new locknuts (13).

FOLLOW-ON TASKS:
- Install power duster (para 4-39).
- Install hydraulic pump (M832 except SN J089-001 thru 159 and JO1 7-160 thru 350) (para 4-75).
- Install hydraulic pump (M832 SN J089-001 thru 159 and JO1 7-160 thru 350 only) (para 4-78).
- Install hydraulic pump (M840) (para 4-81).

4-31. STEERING KNUCKLE REPLACEMENT.

This *Task Covers:*

a. Removal
b. Cleaning and Inspection
c. Installation

Initial Setup:

Equipment Conditions:

- Axle spindle removed (para 4-37).
- Tie-rod disconnected (para 4-29).

Tools/Test Equipment:

- General mechanic's tool kit
- Common no. shop set

Materials/Parts:

- Grease (Item 7, Appendix E)
- Dry cleaning solvent (Item 14, Appendix E)
- Nonelectrical wire (as required) (item 19, Appendix E)
- Two gaskets
- Six lockwashers

a. REMOVAL

NOTE

Steering knuckles for all dolly sets are similar. The M689 steering knuckle is shown. The M832 steering knuckle (SN J089-001 thru 159 and J017-160 thru 360) Includes a steering stop plate.

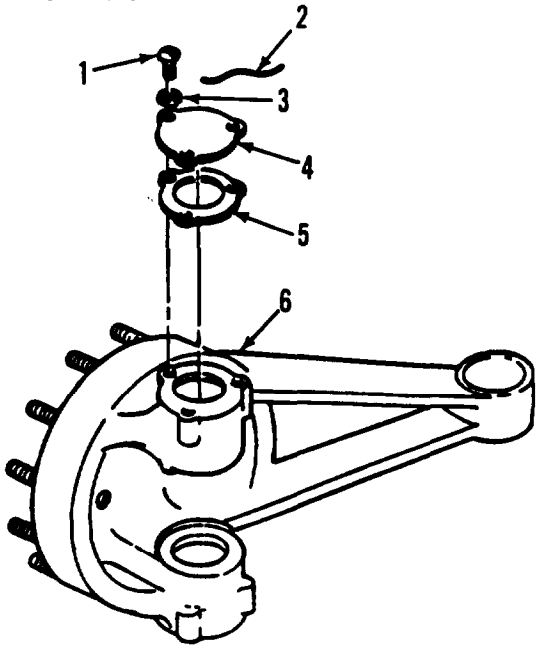

1. Remove nonelectrical wire (2), three screws(1) and lockwashers (3), cap (4), and gasket (5) from top and bottom of steering knuckle (6). Discard nonelectrical wire, gaskets, and lockwashers.

4-31. STEERING KNUCKLE REPLACEMENT (Con't).

2. Remove kingpin key (14) from front axle.

3. Remove kingpin (13), steering knuckle (6), bearing (12), shim (9), and two flat washers (10 and 11) from front axle.

4. If damaged, remove two grease fitings (8) from steering knuckle (6). Discard grease fitings.

NOTE

For installation purposes, note position of screw.

5. Loosen nut (16) and remove screw (15) and nut (16) from steering knuckle (6).

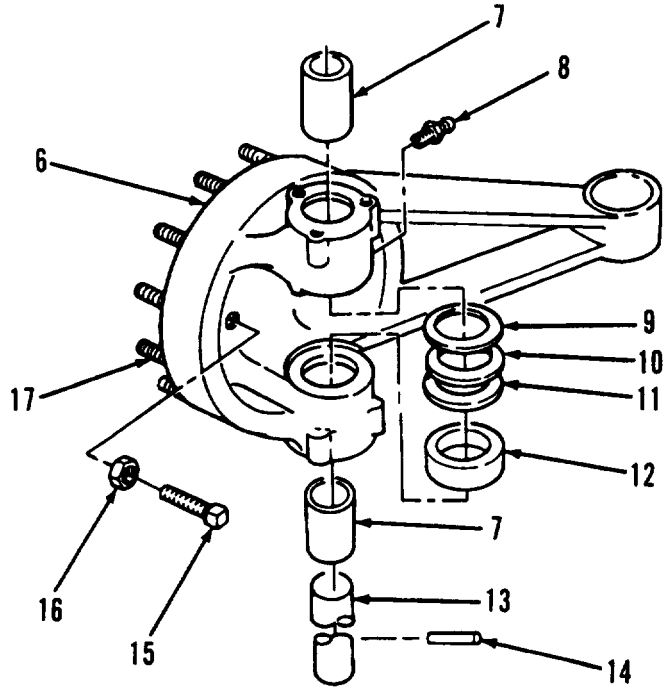

NOTE

For installation purposes, note position of bushings.

6. If damaged, remove two bushings (7) from steering knuckle (6). Discard bushings.

7. If damaged, remove 12 studs (17) from steering knuckle (6). Discard studs.

4-31. STEERING KNUCKLE REPLACEMENT (Con't).

b. CLEANING AND INSPECTION

WARNING

. Dry cleaning solvent, P-D-SW, is toxic and flammable. Always wear protective goggles and gloves, and use only in a wellventilated area. Avoid contact with skin, eyes, and clothes, and DO NOT breathe vapors. DO NOT use near open flame or excessive heat. The solvent's flashpoint is 100°F-138°F (38°C-59°C). If you become dizzy while using drycleaning solvent immediately get fresh air and medical help. If solvent contacts your eyes, immediately wash them and get medical aid.

• Compressed air used for cleaning or drying purposes, or tor clearing restrications, should never exceed 30 psi (207 kPa). Wear protective clothing (goggles/shield, gloves, etc.) and use caution to avoid Injury to personnel.

1. Clean all components with dry cleaning solvent. Dry with compressed air.

2. Measure outside diameter of kingpin at wear points. If diameter measures less than 1.419 in. (36.04 mm), replace kingpin.

c. INSTALLATION

NOTE

Press each bushing flush with inside surface of steering knuckle.

1. If removed, install 12 new studs(17) on steering knukle (6).

CAUTION

Make sure bushing hole or groove is alined with grease fiting hole in steering knuckle. Failure to follow this caution may result in inadequate lubrication of steerlng knuckle.

2. If removed, install two new bushings (7) on steering knuckle (6).

3. Install nut (16) and screw (15) in position noted during removal, then tighten nut.

4. If removed, install two new grease fittings (8).

5. Apply grease to two bushings (7).

NOTE

Make sure notch in kingpin is alined with keyhole in front axle.

6. Install bearing (12), shim (9), two flat washers (1O and 11), steering knuckle (6), and kingpin (13) on front axle.

7. Install kingpin key (14) on front axle.

4-31. STEERING KNUCKLE REPLACEMENT (Con't).

8. Install new gasket (5), cap (4), three new lockwashers (3) and screws(1), and new noneletrical wire (2) on top and bottom of steering knuckle (6).

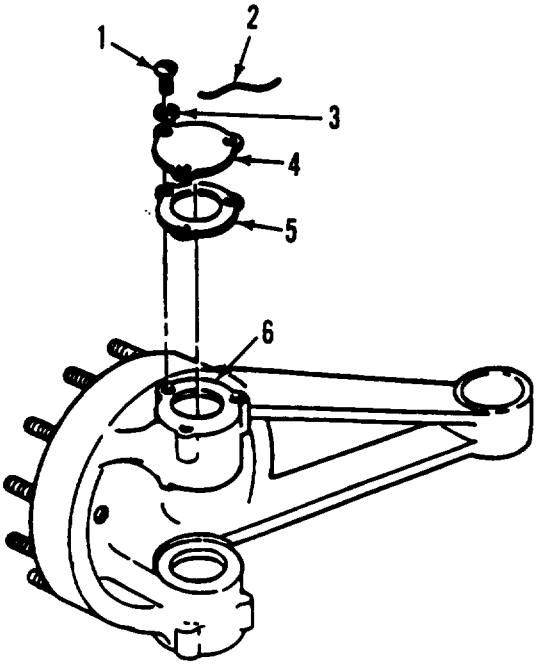

NOTE

The M832 (SN J089-001 thru 159 and SN J017-160 thru 350 only) requires steering stop adjustment.

FOLLOW-ON TASKS:

- Adjust steering stops (para 4-71).
- Connect tie-rod (para 4-29).
- Install axle spindle (pars 4-37).
- Check wheel alinement (para 4-32).

4-32. WHEEL ALINEMENT.

This Task Covers: Aiinement

Initial **Setup:**

Equipment Conditions:

- Dolly set parked on level surface with wheels straight ahead.

Tools/Test Equipment

Ž General mechanic's tool kit
- Common no. 1 shop set

NOTE

Front wheels of dolly set are properly alined when dIstance between corresponding points on inside front tire walls is 1/4 in. (6.35 mm) more in rear than in front.

ALINEMENT

1. Visually ensure that drawbar (2) is straight ahead in centered Position,

NOTE

- Tie-rod length is adjusted by turning tie-rod.
- Make sure jamnuts are sufficiently ioosened as tie-rod is turned.

2. Measure the distance between the fattest points on the inner tire sidewalls on front and rear of front tires.

3. Turn one tie-rod (1) to lengthen or shorten length of tie-rod until measurements(D) are the same for front and rear of front axle.

4. Turn both tie-rods (1) equally until distance measured between both front tires at points 3 and 4 is 1/4 in. (6.35 mm) more at rear than in front.

5. While holding tie-rods (1) to prevent turning, tighten four jamnuts.

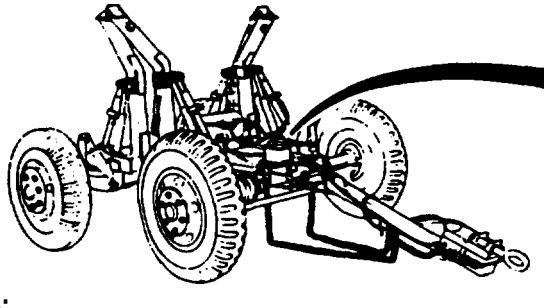

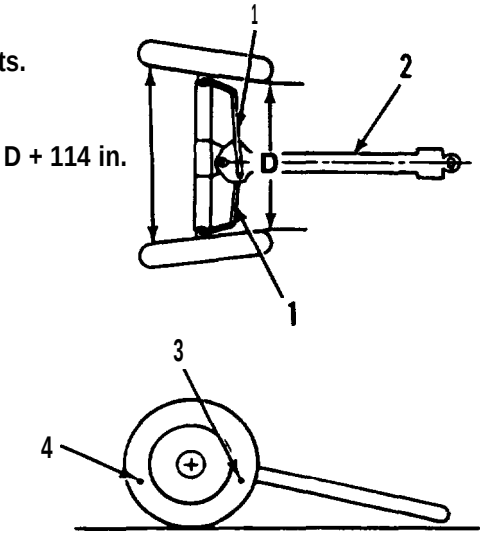

FOLLOW-ON TASKS:

- Adjust steering stops (M832 SN J089-001 thru 159 and J017-180 thru 350 only) (para 4-71).

Section VIII. REAR AXLE MAINTENANCE

Paragraph Title	Page Number
Rear Axle Replacement (M689)	4-76
Rear Axle Replacement (M832)	478
Rear Axle Replacement (M840)	4-80

4-33. REAR AXLE REPLACEMENT (M689).

This Task Covers:

a. Removal

b. Installation

Initial Setup:

Equipment Conditions:

- Handbrake lever removed (para 4-36).
- Axle spindle removed (para 4-37).
- Hydraulic broke lines and fitings removed (para 4-40).
- Power cluster removed (para 4-39).
- Alining rods disconnected (para 4-65).
- Wiring harness removed from rear axle (para 4-25).

Materials/Part:

- Twelve lockwashers

Tools/Test Equipment

- General mechanic's tool kit
- Common no. 1 shop set

Personnel Required: Two

a. REMOVAL

1. While supporting rear dolly, remove eight screws (8) and lockwashers (7), two trunnion caps (6), and rear axle (1) from dolly. Discard lockwashers.

2. Remove four nuts (3), lockwashers (4), bolts (5), and trunnion bearings (2) from rear axle (l). Discard lockwasher.

b. INSTALLATION

1. Install four trunnion bearings (2) on rear axle (1) with four bolts (5), new lockwashers (4), and nuts (3).

2. Install rear axle (1) on dolly with two trunnion caps (6) and eight new lockwashem (7) and screws (8).

4-33. REAR AXLE REPLACEMENT (M689) (Con't).

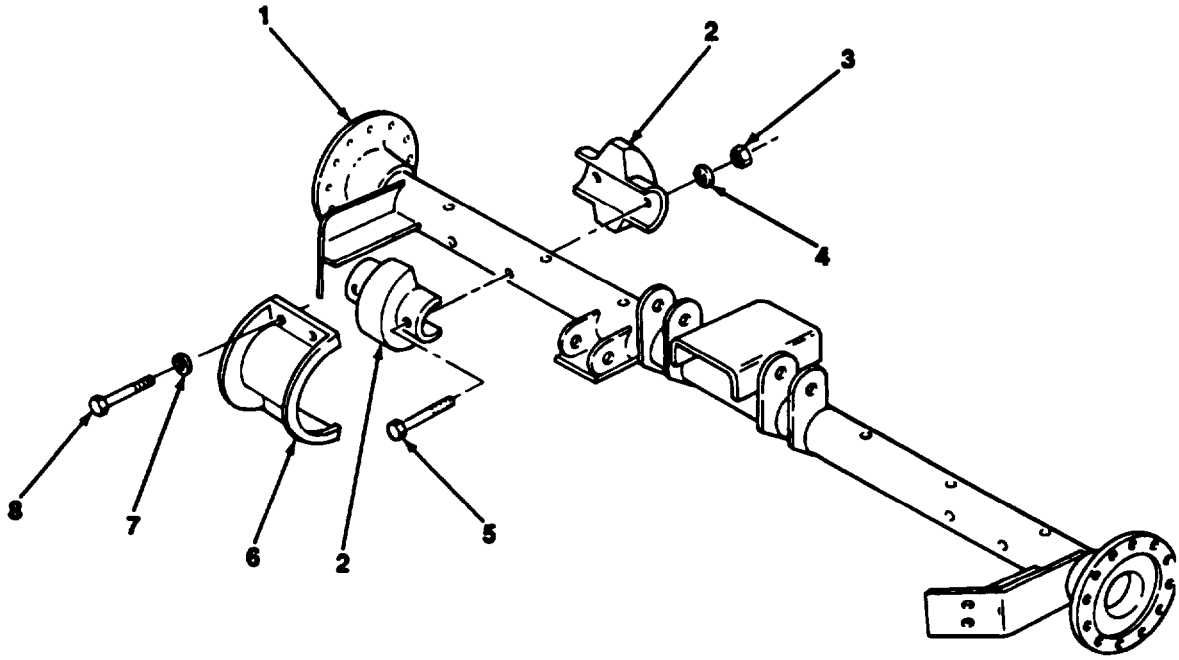

FOLLOW-ON TASKS:

- Install wiring harness on rear axle (para 4-25).
- Connect alining rods (para 4-65).
- Install power duster (para 4-39).
- Install hydraulic brake lines and fitings (para 4-40).
- Install axle spindle (para 4-37).
- Install handbrake lever (para 4-36).

4-34. REAR AXLE REPLACEMENT (M832).

This *Task Covers:*

a. Removal

b. Installation

Initial Setup:

Equipment Conditions:

. Platform removed (M832 except SN J089-001 thru 159 and J017-160 thru 350) (para 4-52).
• Platform removed (M832 SN J089-001 thru 159 and JO17-160 thru 350 only) (para 4-53).
• Handbrake lever removed (para 4-36).
Ž Axle spindle removed (para 4-37).
• Hydraulic brake lines and fitings removed (para 4-40).
. Hydraulic pump removed (M832 except SN J089-001 thru 159 and J017-160 thru 350) (para 4-75).
• Hydraulic pump removed (M832 SN J089-001 thru 159 and J017-160 thru 350 only) (para 4-78).
• Power cluster removed (para 4-39).
• Alining rods disconnected (para 4-65).
. Rear stabilizer bar removed (para 4-66).
• Wiring harness removed from rear axle (para 4-25).

Materials/Parts

• Eighteen lockwashers
Ž Two rivets

Tools/Test Equipment:

• General mechanic's tool kit
• Common no. 1 shop set

Personnel Required: Two

a. REMOVAL

NOTE

The M832 (SN JO89-001 thru 159 and J017-180 thru 350) does not have a positioning lever.

1. Disconnect right and left pins (4) from ends of positioning lever (12). Remove positioning lever.

2. Chisel head off right and left rivets (2) and use a drive pin punch to remove rivets (2) from hole. Remove right and left wire rope assemblies (3) from rear axle (1). Discard rivets.

3. Remove two bolts (6) and lockwashers (7) and shroud (5) from rear axle (1). Discard lockwashers.

4. Disconnect pin (13) of wire rope assembly (3) from rear axle (l). Remove screw(14) and wire rope assembly (3) from rear axle (l).

NOTE

For the M832 (SN J089-001 thru 159 and JO17-160 thru 350), mounting bracket 12255119 (8) is replaced by rnounting bracket 12446800 (11).

s. Remove four screws (9) and lockwashers (10) and mounting bracket (8 or 11) from rear axle (l). Discard lockwashers.

6. While supporting dolly, remove eight screws (18) and lockwashars(17), two trunnion cape (16), and rear axle (1) from dolly. Discard lockwashers.

7. Remove four nuts (21), lockwashers (20), bolts (19), and trunnion bearings (15) from rear axle(1). Discard lockwashers.

b. INSTALLATION]

1. Install four trunnion beatings (15) on rear axle (1) with four bolts (19), new lockwashers (20), and nuts (21).

4-34. REAR AXLE REPLACEMENT (M832) (Con't).

2. Install rear axle (1) on dolly with two trunnion caps (16) and eight new lockwashers (17) and screws (18).

NOTE

For the M832 (SN J089-001 thru 159 and J017-160thru 350), mounting bracket 12255119 (8) Is raplaced by mounting bracket 12448800 (11).

3. Install mounting bracket (8 or 11) with four new lockwashers (1 0) and screws (9).

4. Install wire rope assembly (3) on rear axle (1) with screw (14), and connect pin (13) to rear axle (l).

5. Install shroud (5) on rear axle (1) with two new lockwashers (7) and bolts (6).

6. Position left and right wire rope assemblies (3) on rear axle (1) and secure with two new rivets (2).

NOTE

The M832 (SN J089-001 thru 159 and J017-160 thru 350) does not have a positioning lever.

7. Install positioning lever (12) on rear axle(1) and connect with right and left pins (4).

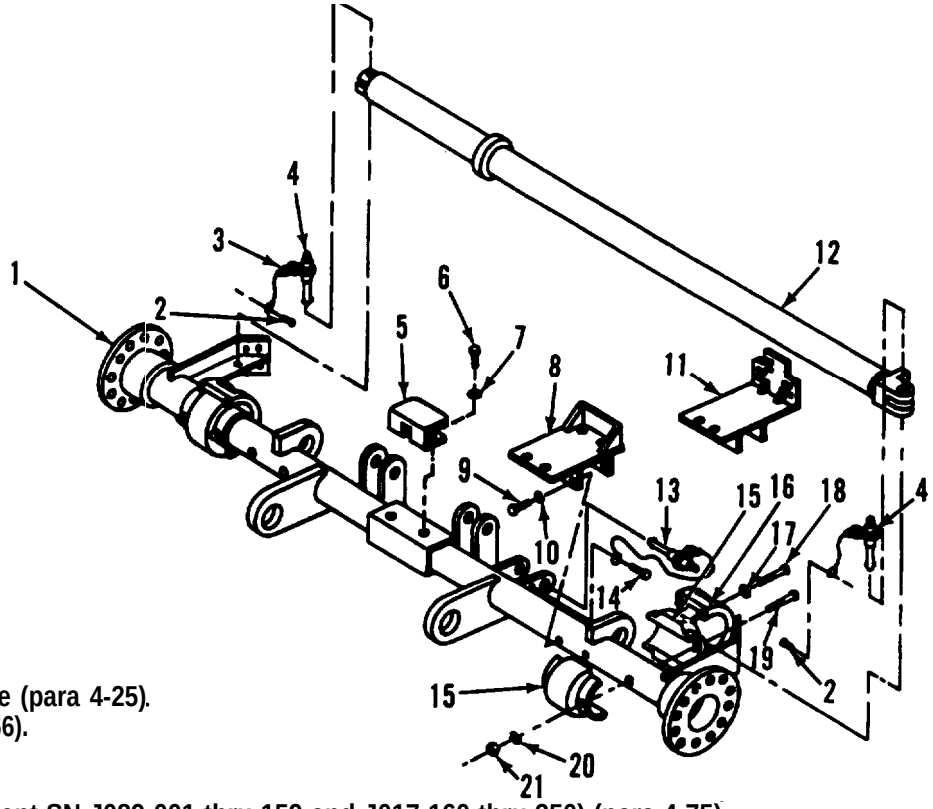

FOLLOW-ON TASKS:

. Install wiring harness on rear axle (para 4-25).
• Install rear stabilizer bar (para 4-66).
• Connect alining rods (para 4-65).
• Install power cluster (para 4-39).
• Install hydraulic pump (M832 except SN J089-001 thru 159 and J017-160 thru 350) (para 4-75).
• Install hydraulic pump (M832 SN J089-001 thru 159 and JO1 7-160 thru 350 only) (para 4-78).
• Install hydraulic broke tines and fittings (para 4-40).
• Install axle spindle (para 4-37).
Ž Install handbrake lever (para 4-36).
. Install platform (M832 except SN J089-001 thru 159 and J017-160 thru 350) (para 4-52).
• Install platform (M832 SN J089-001 thru 159 and J017-160 thru 350 only) (para 4-53).

4-35. REAR AXLE REPLACEMENT (M840).

This *Task Covers:*

a Removal

b. Installation

Initial Setup:

Equipment Conditions:

- Step plate removed (para 4-51).
- Axle spindle removed (Para 4-37).
- Hydraulic brake lines and fittings removed (Para 4-40).
- Hydraulic pump removed (para 4-81).
- Power cluster removed (pare 4-39).
- Alining rods disconnected (para 4-65).

Materials/Part

- Fourteen lockwashers

Tools/Test Equipment:

- General mechanic's tool kit
- Common no. 1 shop set

a. REMOVAL

1. Remove positioning bar (10) from rear axle (1).
2. Remove two screws (2) from mounting bracket (3).
3. Remove two screws (5) and lockwashers (4) and mounting bracket (3) from rear axle (l). Discard lockwashers.
4. While supporting dolly, remove eight screws (11) and lockwashers (12), two trunnion caps (13), and rear axle (1) from dolly. Discard lockwashers.
5. Remove four nuts (7), lockwashers (8), screws (9), and trunnion bearings (6) from rear axle (1). Discard lockwashers.

[b. INSTALLATION I

1. Install four trunnion bearings (6) on rear axle (1) with four screws (9), new lockwashers (8), and nuts (8).
2. Install rear axle (1) on dolly withtwotrunnioncaps(13) and eight new lockwashers (12) and screws (11).
3. Install mounting bracket (3) on rear axle(1) with two new lockwashers (4) and screws (5).
4. Install two screws (2) on mounting bracket (3).
5. Install positioning bar (10) on rear axle (1).

4-35. REAR AXLE REPLACEMENT (M840) (Con't).

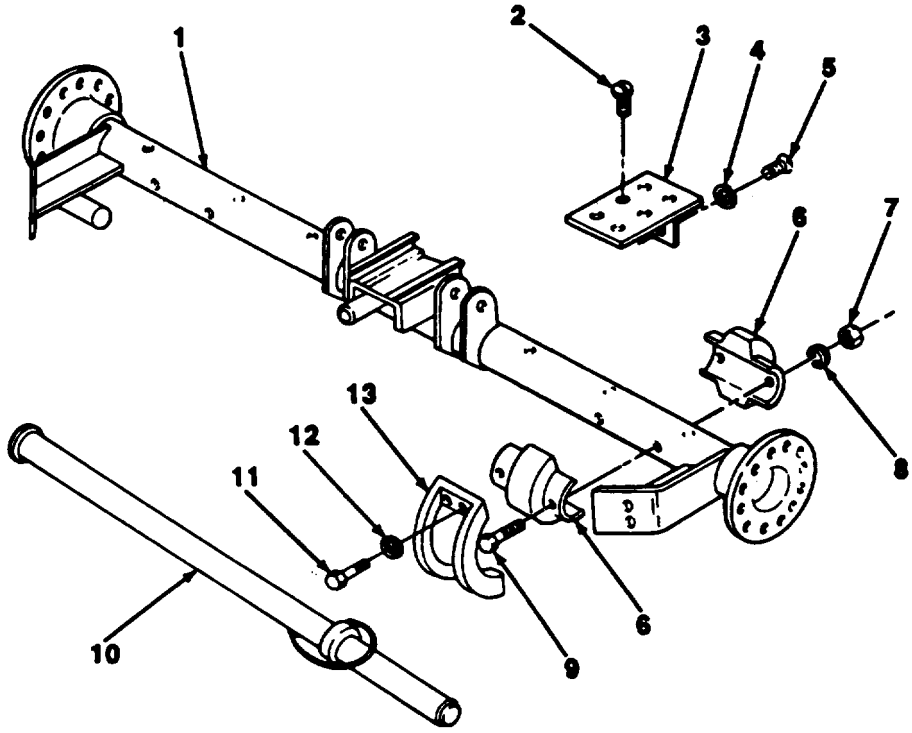

FOLLOW-ON TASKS:

- Connect alining rods (para 4-65).
- Ž install power cluster (para 4-39).
- ž install hydraulic pump (para 4-81).
- Install hydraulic brake lines and fitings (para 4-40).
- Install axle spindle (par 4-37).
- . Install step plate (para 4-51).

Section IX. BRAKE SYSTEM MAINTENANCE

Paragraph Title	Page Number
Air Coupling Replacement	4-113
Air Cylinder Repair	4-111
Air Hose Replacement	4-118
Air Resewoir Replacement	4-114
Brakeshoe Maintenance	4-86
Handbrake Lever and Cable Replacement	4-82
Hydraulic Brake Lines and Fittings Replacement	4-98
Power Cluster Replacement	4-95
Relay Valve Replacement	4-116
Wheel Cylinder Maintenance	4-92

4-36. HANDBRAKE LEVER AND CABLE REPLACEMENT.

This Task Covers:

a. Removal

b. Installation

Initial Setup:

Equipment Conditions:

- Hub and braked rum removed (para 4-47).

Tools/Test Equipment:

- General mechanic's tool kit
- Common no. 1 shop set

Materials/Parts:

- One gasket
- Two lockwashers
- Two statwashers
- Three cotter pins

a. REMOVAL]

1. Remove two nuts (11) and bolts (10) and retaining strap (9) from handbrake cable (12).

2. Remove two nuts (1) and starwashers (2), cable bracket (4), and two bolts (3), as an assembly. Discard starwashers.

3. Remove two nuts (19) and lockwashers(18) from handbrake lever assembly (14), and remove handbrake lever assembly (14) from axle bracket (17). Discard lockwashers.

4. Pull slack of handbrake cable (12) toward brake actuating lever(7), and disconnect end of handbrake cable (12) from lever (7).

4-36. HANDBRAKE LEVER AND CABLE REPLACEMENT (Con't).

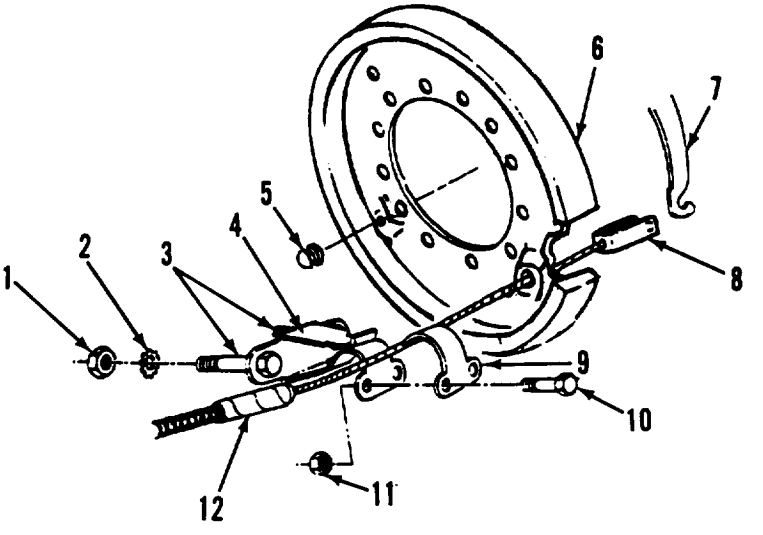

NOTE

End of cable maybe difficult to pull through hole in dust shield. Tap end of cable through dust shield to remove.

5. Pull end (8) of handbrake cable (12) through backing plate (6), and remove handbrake cable (12) with handbrake lever assembly(14) from dolly set.

6. Inspect plug (5) for damage or deterioration. Remove and discard if damaged.

7. Remove two bolts (23) and spacers (22), cable clamp (21), and spacer (20) from handbrake lever assembly (14).

8. Remove cotter pin (16), pin (24), and washer (15) to disconnect handbrake cable (12) from link (13) of handbrake lever assembly (14). Discard cotter pin.

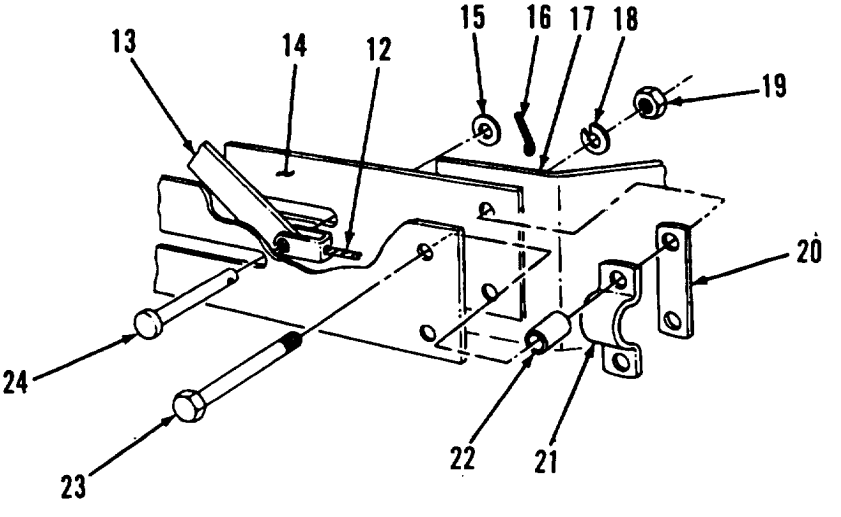

4-36. HANDBRAKE LEVER AND CABLE REPLACEMENT (Con't).

9. Remove two cotter pins (28), slotted nuts (27), screws (25), and washers (26). Remove brake actuating lever (7) and link (29). Discard cotter pins.

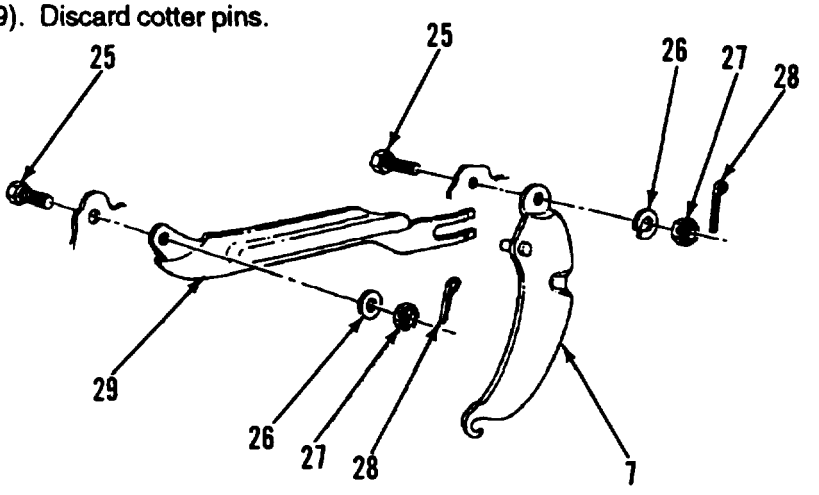

b. INSTALLATION

NOTE

Make sure slot of link engages pin of lever.

1. Install brake actuating lever (7) and link (29) with two screws (25), washers (26), slotted nuts (27), and new cotter pins (28).

2. Feed end (8) of handbrake cable (12) through hole in backing plate (6).

3. Connect end of handbrakecable (12)to link (13) of handbrake lever assembly (14) with pin (24), washer (15), and new cotter pin (16).

4. Install new plug (5) in other backing plate hole, if plug was discarded.

5. Install spacer, cable clamp (21), and two spacers (22) on handbrake lever assembly (14). Install two bolts (23) to hold components in place.

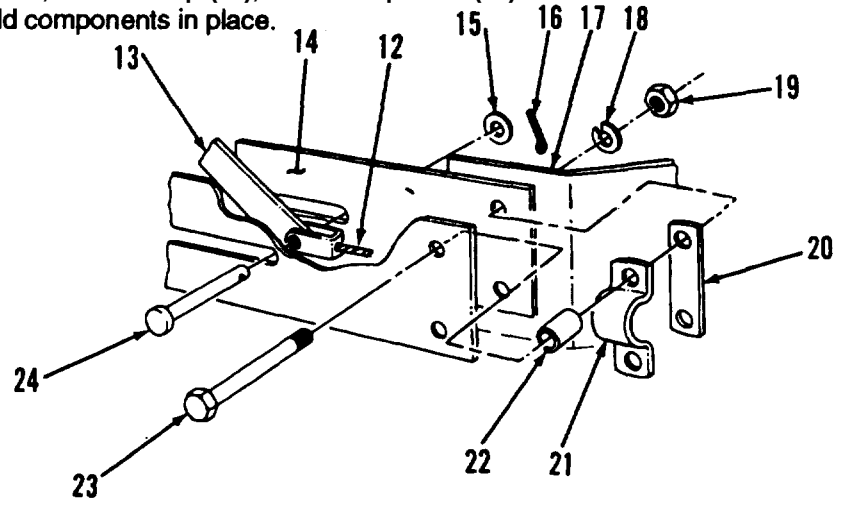

4-36. HANDBRAKE LEVER AND CABLE REPLACEMENT (Con't).

NOTE

End of cable maybe difficult to push through hole in dust shield. Tap end of cable through dust shield to install.

6. Install handbrake cable(12) and connect end of cable to brake actuating lever (7).

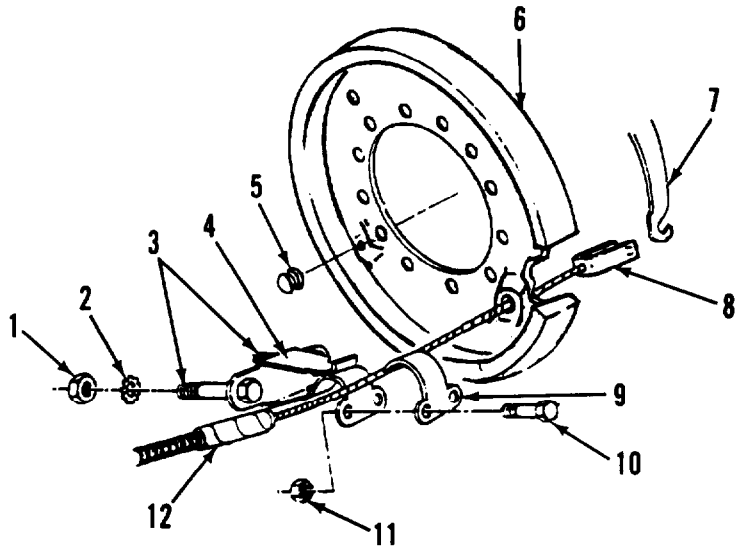

7, Install handbrake lever assembly (14) on axle bracket(17) with two new lockwashers(18) and nuts (19).

8. With two new starwashers (2) and nuts(1), install cable bracket (4) and two bolts (3), as an assembly.

9. Install handbrake cable (12) on cable bracket (4) with retaining strap (9) and two bots (10) and nuts (10).

FOLLOW-ON TASKS:

. Install hub and brakedrum (para 4-47).
• Adjust handbrake lever (para 3-5).

4-37. BRAKESHOE MAINTENANCE.

This *Tack Covers:*

a. Removal
b. Cleaning and Inspection
c. Installation
d. Adjustment

Initial Setup:

Equlpment Conditions:

- Hub and brakedrum removed (para 4-47).
- Handbrake lever and cable removed (rear dolly only) (para 4-36).

Tools/Test Equipment:

- General mechanic's tool kit
- Common no. 1 shop set

Material/Parts

- Rags(item 11, Appandix E)
- Dry cleaning solvent (item 14, Appendix E)
- Six lockwashers

WARNING

DO NOT handlebrakeshoes, brakedrums, orotherbrakecomponents unless area has been properly cleaned. There may be asbestos dust on thesecomponents, which can be dangerous if you touch it or breathe it. Wear an approved filter mask and gloves. Never use compressed air or a dry brush to clean brake components. Dust may be ramoved using an industrial-type vacuum cleaner. Clean dustormud away from brake components with water and a wet, soft brush or cloth. Failure to follow this warning may result in serious illness or death to personnel.

NOTE

Front rear dolly eats have different backing plates. Backing plate for rear dolly eat includes access for handbrake cable.

a. REMOVAL

1. Remove return spring (6).

2. Remove two slotted washers (12) and washers (13).

3. Remove four nuts (17) and lockwashers (16) from rear of backing plate (15). Discard lockwashers.

4. Remove two brakeshoes (4) and two small threaded pins (14).

5. Remove cupped washer (1), spring (2), retaining washer (3), and largethreaded pin(5) from each brakeshoe (4).

6. Remove cupped washer (11) and washer (10) from each of two anchor pins (9).

7. Remove nut (7) and lockwasher (8) from each anchor pin (9), and remove two anchor pins (9) from backing plate (15). Discard lockwashers.

4-37. BRAKESHOE MAINTENANCE (Con't).

NOTE

Perform steps 8 and 9 only if wheel cylinder or individual components of backing plate are damaged.

8. Remove wheel cylinder (para 4-38).

NOTE

Backing plate is removed as an assembly and consists of backing we, deflector, 12 pressed-in bolts, rubber plug, and two adjustment cams. Do not disassembly unless individual components are damaged.

9. Remove ten nuts (18) and starwashers (1 9), backing plate (15), and axle spindle (21) from axle (20). Discard starwashers.

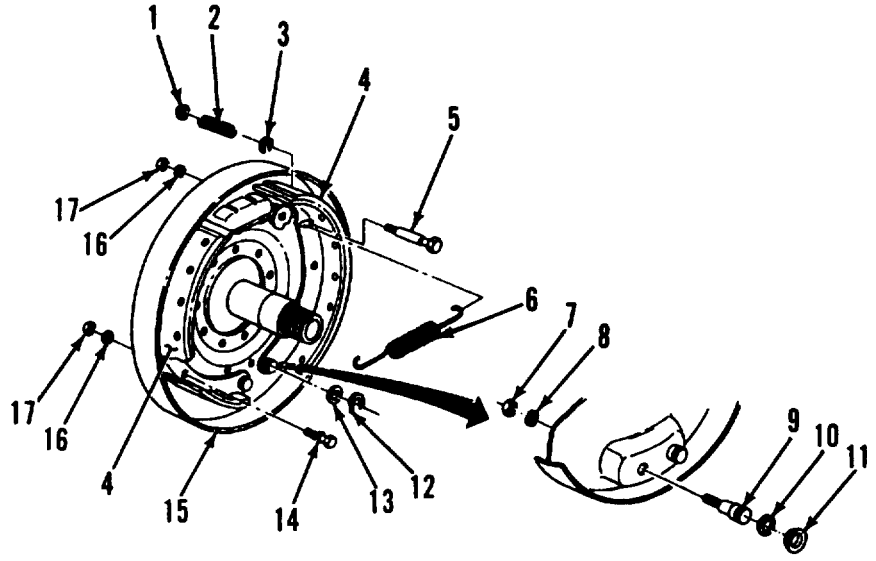

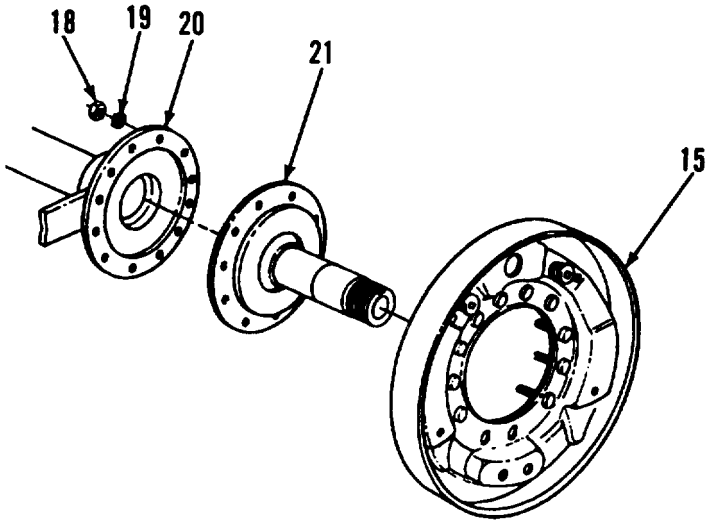

4-37. BRAKESHOE MAINTENANCE (Con't).

b. CLEANING AND INSPECTION

WARNING

- DO NOT handle brakeshoes, brakedrums, or other brake components unless area has been properly cleaned. There maybe asbestos dust on these cornponents which can be dangerous if you touch It or breathe it. Wear an approved fliter mask and gloves. Never use compressed air or a dry brush to clean brake components. Dust maybe removed using an Industrial-type vacuum cleaner. Clean dust or mud away from brake components with water and a wet, soft brush or cloth. Failure to follow this warning may result In serious illness or death to personnel.

- Dry cleanlng solvent, P-D-680, Is toxic and flammable. Always wear protective. goggles and gloves, and use only in a well-ventilated area. Avoid contact with skin, eyes, and clothes and DO NOT breathe vapors. DO NOT use near open flame or excesslve heat The solvent's flash point is 100°F-138°F (38°C-59°C). If you become dizzy while using cleaning solvent immediately get fresh air end medical help. If solvent contacts eyes,imediately wash your eyes and get medical aid.

1. Clean all parts with dry cleaning advent. Dry thoroughly.
2. Inspect all parts for damage. Replace any damaged parts.
3. Inspect brakeshoe surfaces for cracks, distortion, and excessive wear. Brakeshoe linings must measure at least 1/8 In. (3.18 mm). Replace brakeshoes if cracked or if lining thlckness is less than 1/8 In. (3.18 mm).

c. INSTALLATION

NOTE

- Perform steps 1 and 2 only if wheel cyilnder or backing plate assembly were. removed.
- Bottom two holes of backing plate will be used for handbrake cable bracket.

1. Install axle spindle (21) and backing plate (15) to axle (20) with ten new stafwasher (19) and nuts (18).
2. Install wheel cylinder (para 4-38).
3. Install two anchor pins (9) with two new lockwashers (8) and nuts (7) on backing plate (15).
4. Install washer (10) and cupped washer (11) over each anchor pin (9).
5. Install large threaded pin (5), retaining washer (3), spring (2), and cupped washer (1) to each brakeshoe (4).
6. Install each brakeshoe (4) to anchor pins(9) and wheel cylinder and Install two new lockwashers (16) and nuts (17).
7. install two small threaded pins (14) and install two new lockwashers (16) and nuts (17) on backing plate (15).
8. Install two washers(13) and slotted washers (12).
9. Install return spring (6).

4-37. BRAKESHOE MAINTENANCE (Con't).

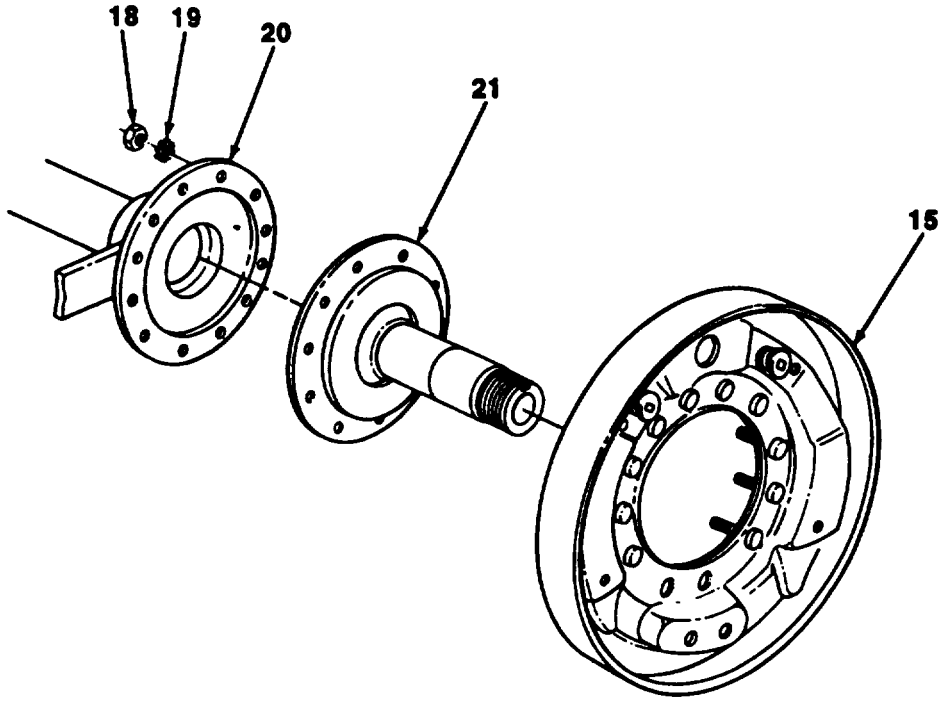

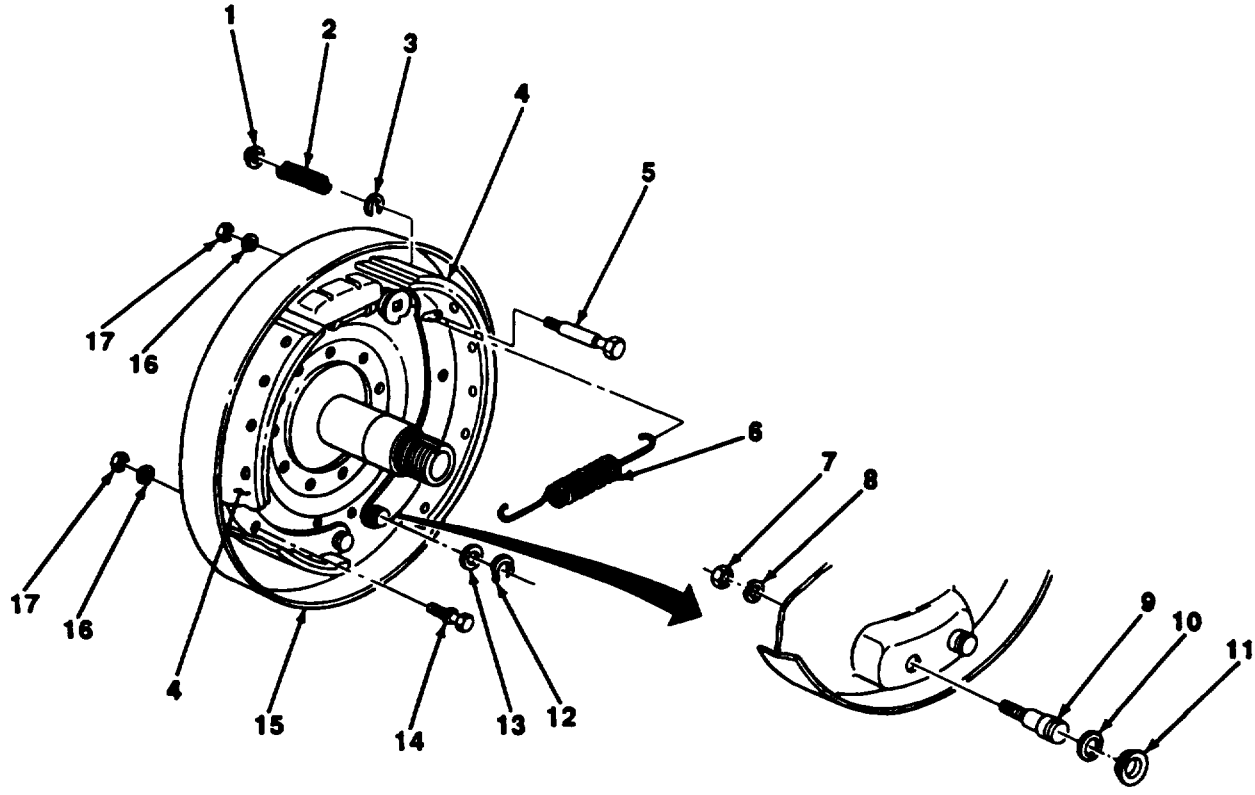

4-37. BRAKESHOE MAINTENANCE (Con't).

10. Inall handbrake lever and cable (rear dolly only) (para 4-36).

11. Install hub and brakedrum (para 4-47).

d. ADJUSTMENT

NOTE

- Wait until brakedrums are cool before adjusting brakeshoes.
- **Check that wheel bearings are adjusted properly before adjusting brakeshoes. There should be no noticeable play between brakedrum and edge of backing plate** (para 4-47)
- Perform steps 1 through 6 to compensate for normal brakeshoe lining wear.
- Perform steps 6 through 10 when brakeshoes have been replaced or brakedrum has been turned.

1. Open draincock (23) on air reservoir (22) to release pressure in brake system by rotating handle (24) of draincock countercockwise.

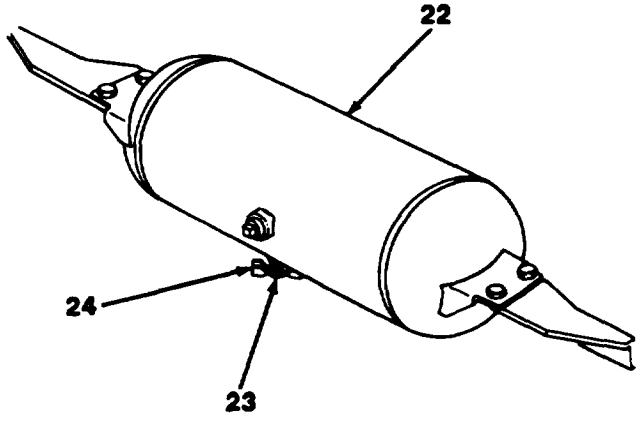

2. Place hydraulic jack (26) under axle (20) and raise until tire (25) clears ground.

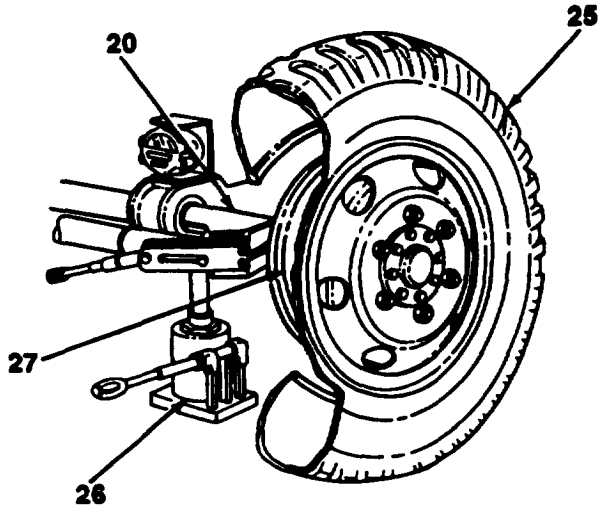

4-37. BRAKESHOE MAINTENANCE (Con't).

3. While looking at rear of backing plate (15), turn adjustment cam (28) closest to front of dolly set counterclockwiae as wheel is rotated. When wheel starts to drag, back off adjustment cam just enough to allow wheel to rotate freely.

4. Turn other adjustment cam (28) clockwise as wheel is rotated. When wheel again starts to drag, back off adjustment cam just enough to allow wheel to rotate freely.

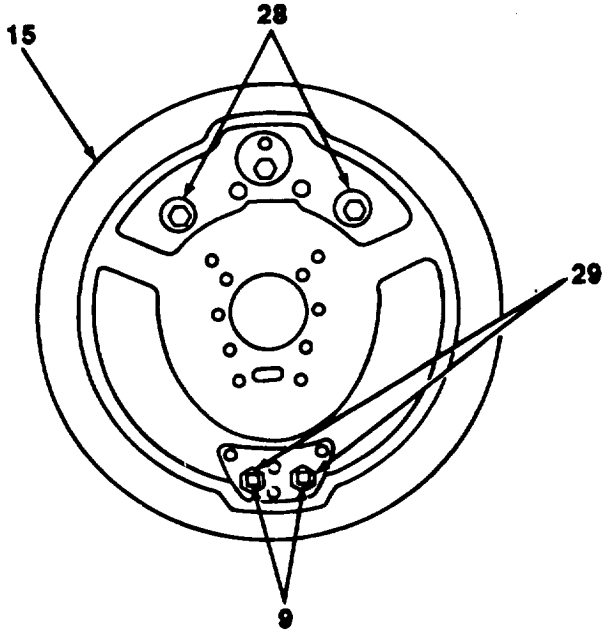

5. Close dalncock (23) by rotating handle (24) of draincock clockwise and remove hydraulic jack (26).

6. While looklng at rear of backing plate (15), turn adjustment cam (28) closest to front of dolly set counterclockwise as brakedrum (27) is rotated. Stop turning adjustment cam when brakedrurn starts to drag.

7. Turn anchor pin (9) closest to front of dolly set until brakedrum (27) rotates freely.

8. Repeat steps 6 and 7 until brake (27) constantly drags.

9. Tighten nut (29) on anchor pin (9) while holding pin from turning.

10. Back off adjustment cam (28) until brakedrum (27) again rotates freely.

11. Repeat steps 6 through 10 for adjustment cam (28) and anchor pin (9) farthest from front of dolly set.

4-38. WHEEL CYLINDER MAINTENANCE

This *Task Cover:*

a. **Removal**
b. **Installation**
c. **Bleeding Brakes**

Initial Set:

Equipment Conditions:

. Brakeshoes removed (para 4-37).

Tools/Test Equipment:

. General mechanic's tool kit
• Common no.1 shop set

Materials/Parts

• Brake fluid (Item 5. Appendix E
• Rags (Item 11, Appendix E)
• Clear container
• Plastic tubing
. Two lockwashers

Personnel Required: Two

a. REMOVAL I

NOTE

Use a suitablecontainerto catoh brake fluid. Make sure spills arecleaned up.

1. Remove fluid passage bolt (1),two washers (9), and multiple connector (2) from rear of backing plate (4).

2. Remove bleeder valve (3) from wheel cylinder (6).

3. Remove two screws(8) and lockwashers(T), wheelcylinder(6), andshieid (5) frombackingplate(4). Discard lockwashers.

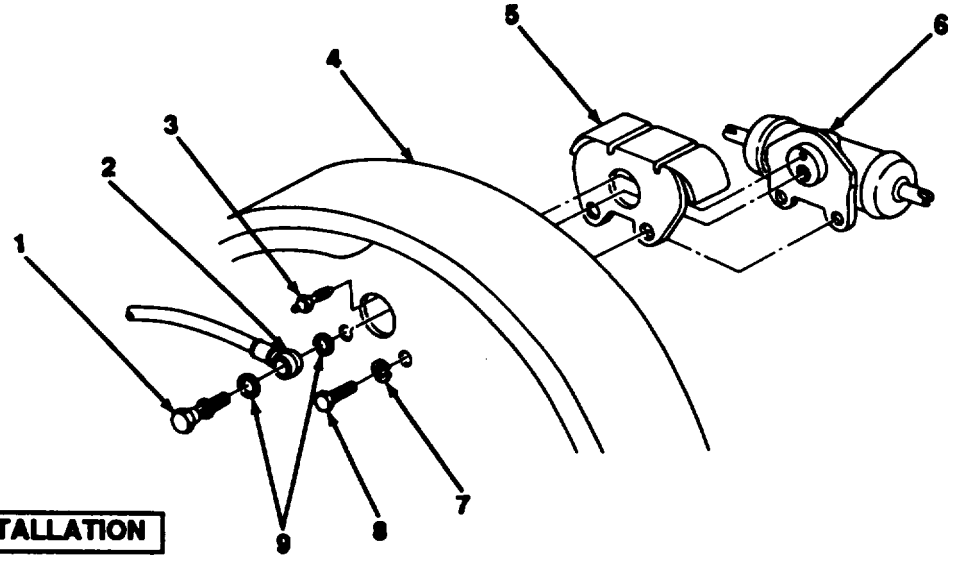

b. INSTALLATION

1. Install shield (5) and wheel cylinder (6) on backing plate (4),with two new lockwasher (7)and screws (8).

2. Install bleeder valve (3).

4-38. WHEEL CYLINDER MAINTENANCE (Con't).

3. Install multiple connector (2) on rear of backing plate (4) with two washers (9) and fluid passage bolt (1).

4. Install brakeshoas (para 4-37).

c. BLEEDING BRAKES

NOTE

- Bleeding can be accomplished manually or by pressure method. Manual bleeding requires that towing vehicle be coupled to dolly set. Pressure bleeding doss not need towing vehicle, but requires an air pressurue supply of 10 to 20 psi (69 to 138 kPa).

Ž Perform steps 1 through 7 for manual bleeding.

• Perform stops 8 through 10 for peasue bleeding.

1. Connect towing vehicle to dolly set air lines (para 2-14).

2. If open, closedraincock(11) on air reservoir (10) by rotating draincock handle(12) clockwise.

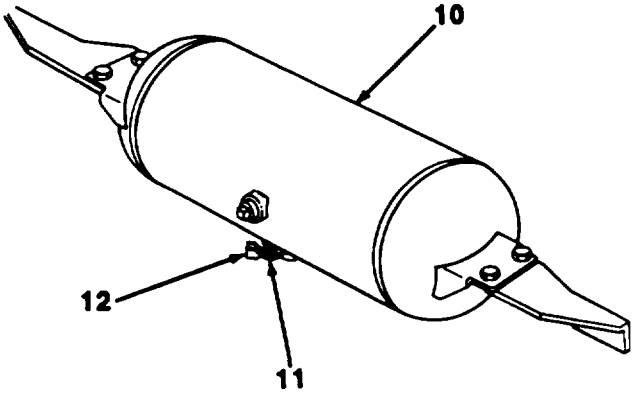

3. Wipe end of bleedervalve (3) dean and install plastic tubing (14) on bleeder valve.

4. Submerge other end of plastic tubing (14) in container (13) partially filled with clean brake fluid.

5. Open bleedervalve (3) 3/4-turn counterclockwise.

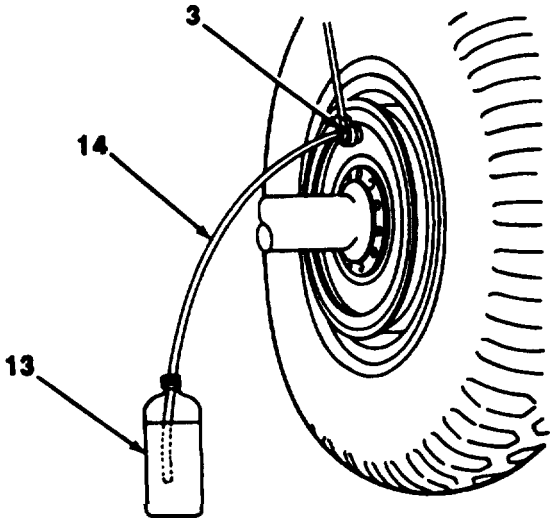

4-38. WHEEL CYLINDER MAINTENANCE (Con't).

6. Push down and hold brake pedal of towing vehicle to remove air from wheel cylinder Close bleeder valve (3), then release brake pedal.

7. Repeat steps 5 and 6 until all air is removed.

8. Remove filler cap and gasket from master cylinderand install adapterandpressure hose. Connect hose to air pressure supply.

9. Perform steps 2 through 5 and close bleeder valve (3) when all air is removed.

10. Inspect gasket for damage and replace if necessary.

11. Fill master cylinder with clean brake fluid (Chapter 3, Section I).

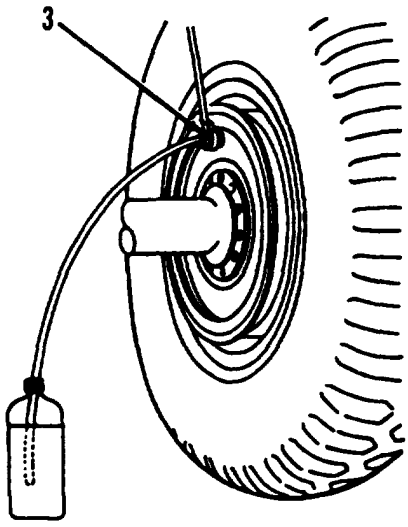

4-39. POWER CLUSTER REPLACEMENT.

This Task Covers:

a. Removal

b. Installation

Initial Setup:

Equipment Conditions:

- Dolly sat parked on level surface with handbrakes applied (para 2-2).
- Air reservoir draincock opened (para 4-43).

Tools/Test Equipment:

- General mechanic's tool kit
- Common no. 1 shop set

Materials/Parts:

Ž Rags (Items 10, Appendix E)
- Antiseizing tape(item17 Appandix E)

a. REMOVALI

NOTE

- Each dolly set has two power cluster assembles.
- Power cluster consists of master cylinder and air cylinder.
- For the M832 (SN J089-001 thru 159 and J017-160 thru 350), bracket is rotated 180 degrees.

1. If removing power cluster at front dolly, disconnect air hose (7) from relay valve(1).
2. If removing power cluster at rear dolly, disconnect air hose (6) from quickdisconnect fitting (5).
3. Remove fluid passage bolt (4) and disconnect multiple connector (3) from master cylinder (2).

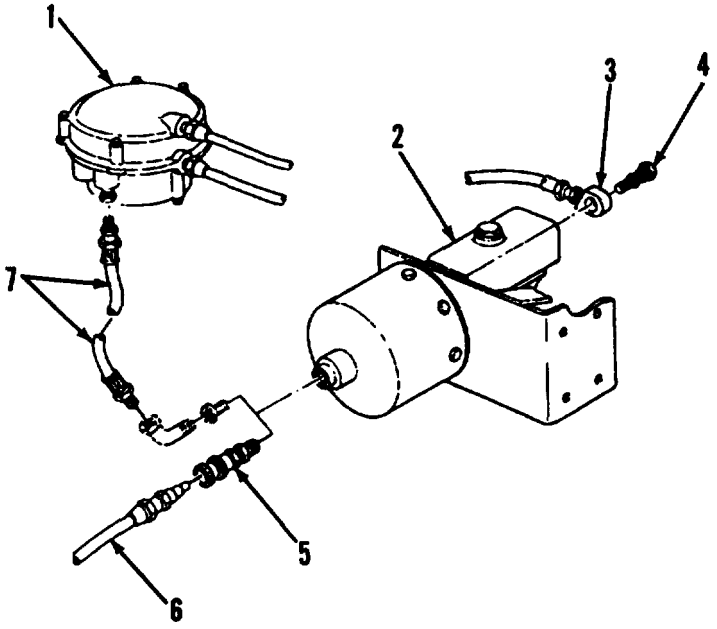

4-39. POWER CLUSTER REPLACEMENT (Con't).

NOTE

Asssmbly at rear dolly has no spacer.

4. Remove four screws (8) and lockwashers (9) from bracket (11) and remove master cylinder(2), air cylinder (12), bracket (11), and spacer (10), as an assembly, from dolly. Discard lockwasher.

5, If power cluster at front dolly was removed, remove air hose (7), elbow (14), and adapter(13) from air cylinder (12)..

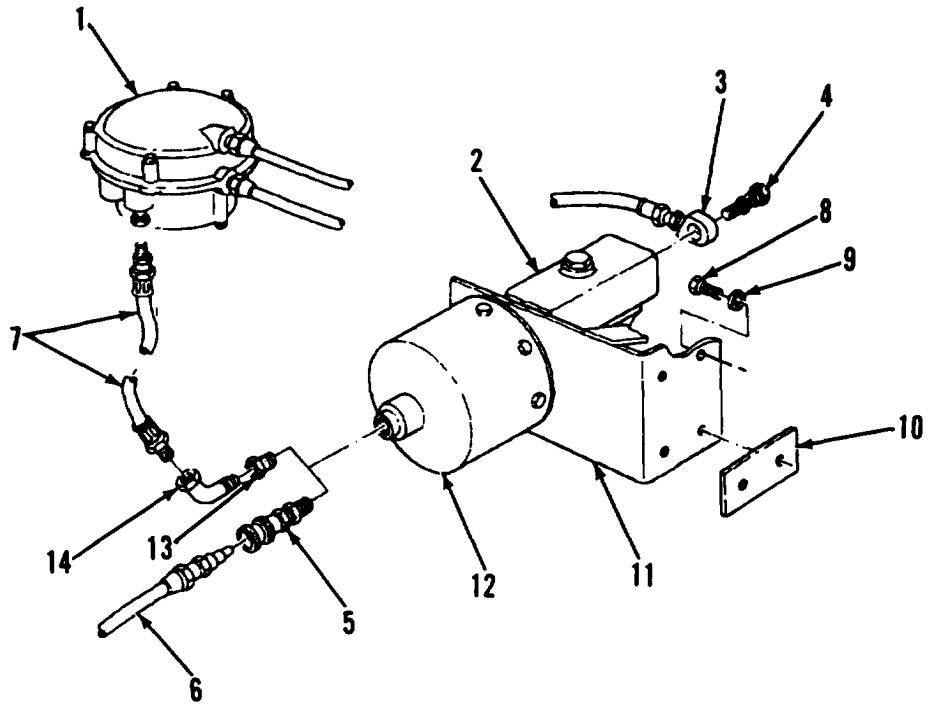

6. If power cluster at rear dolly was removed, remove quickdisconnect fitting (5) from air cylinder (12).

7. Remove two bolts (17), indicator (16), and three lockwashers (15) from bracket (11), and separate master cylinder (2) and air cylinder (12) from bracket (11). Discard lockwashers.

b. INSTALLATION [

NOTE

For the M832 (SN J089-001 thru 159 and J017-160thru 350), bracket is rotated 180 degrees.

1. Install air cylinder (12) and master cylinder (2) on bracket(11) with three new lockwashers (15), indictor, and two bolts (17).

2. If assembly was removed from reardolly, apply antisezing taps to threads of quick disconnect fitting (5) and install quick disconnect fiting on air cylinder (12).

3. If assembly was removed from front dolly, apply antiseizing tape to threads of adapter (13), elbow (14), and air hose (7), and install adapter (13), elbow (14), and air hose (7) on air cylinder (12).

4-39. POWER CLUSTER REPLACEMENT (Con't).

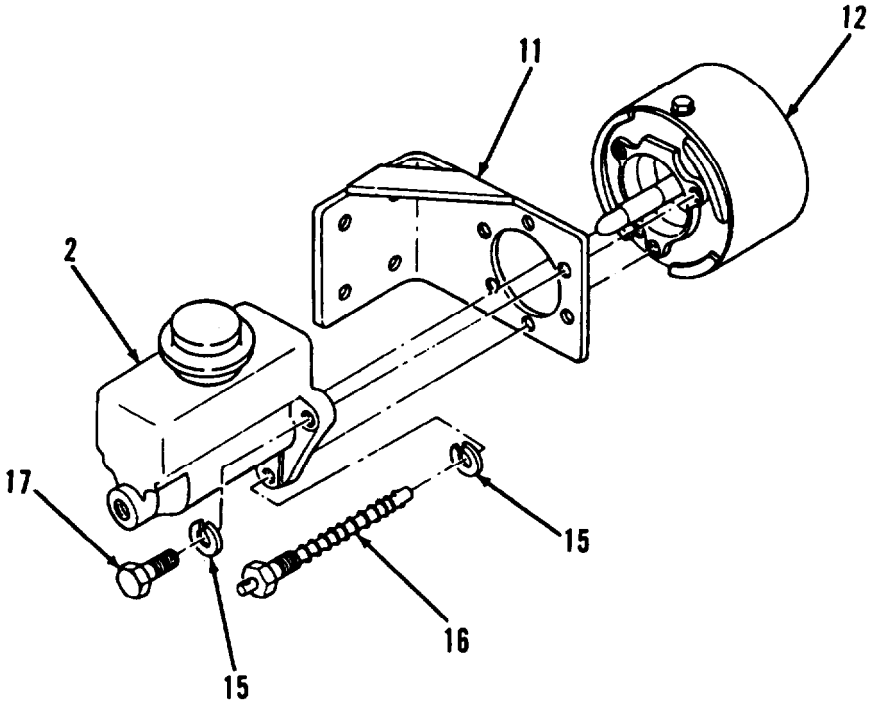

NOTE

Assembly at rear dolly has no spacer.

4. Install spacer (10) and master cylinder (2), air cylinder (12), and bracket (11), as an assernbly, on dolly set with four new lockwashers (9) and screws (8).

5. Connect multiple connector (3) to master cylinder (2) with fluid passage bolt (4).

6. If power cluster was removed from rear dolly, connect air hose (6) to quick disconnect fitting (5).

7. If power duster was removed from front dolly, apply antiseizing tape to threads of relay valve(1) and connect air hose (7) to relay valve (1).

FOLLOW-ON TASKS:

Ž Bleed brakes (para 4-38).
• Close air reservoir drainccck (para 4-43).

4-40. HYDRAULIC BRAKE LINES AND FITTINGS REPLACEMENT.

7his Task Covers:

a. Removal

b. Installation

Initial Setup:

Equiprnent Conditions:

. Dolly set parked on level surface with handbrakes applied (para 2-2).
- Platform removed (for brake lines at rear axle) (M832 except SN J089-001 thru 159 and J017-160 thru 350) (para 4-52).
- Platform removed (for brake lines at rear axis) (M832 SN J089-001 thru 159 and J017-160 thru 350 only) (para 4-53).

Tools/Test Equipment

- General mechanic's tool kit
- Common no. 1 shop set

Materials/Parts:

Ž Rags (item 11, Appendix E)
- Twelve lockwashers (M832)
- Fourteen lockwashers (M689 and M840)

a. REMOVAL

1. Open draincock (2) on air reservoir (1) by rotating draincock handle (3) counterlockwise.

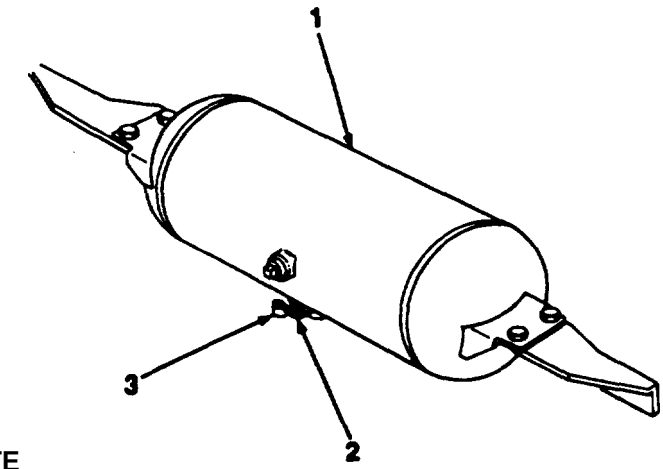

NOTE

Perform steps *2* through 4 to remove hydraulic brake line at each steering knuckle of front axle.

2. Disconnect brake line (6) from brake line (7).

3. Remove nut (14), washer (13), and end of brake fine (7) from front axle (15).

4. Remove brake line (7) from multiple connector (10).

5. Remove fluid passage bolt (8), washer(9), muitiple connector (10), and washer(11) from backing plate (12).

NOTE

Perform steps 6through 8to remove hydraulic brake line from right or left of front axle.

4-40. HYDRAULIC BRAKE LINES AND FITTINGS REPLACEMENT (Con't).

6. Disconnect brake line (6) from brake line (7) if not already disconnected.

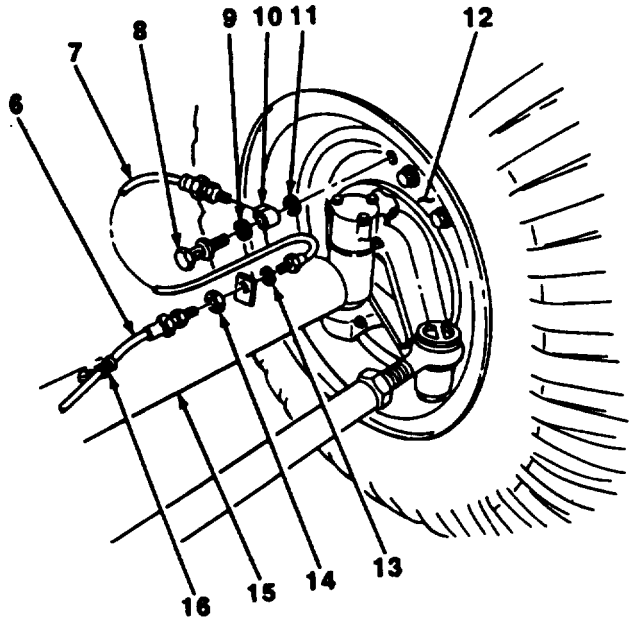

7. Disconnect brake line (6) from multiple connector (19).

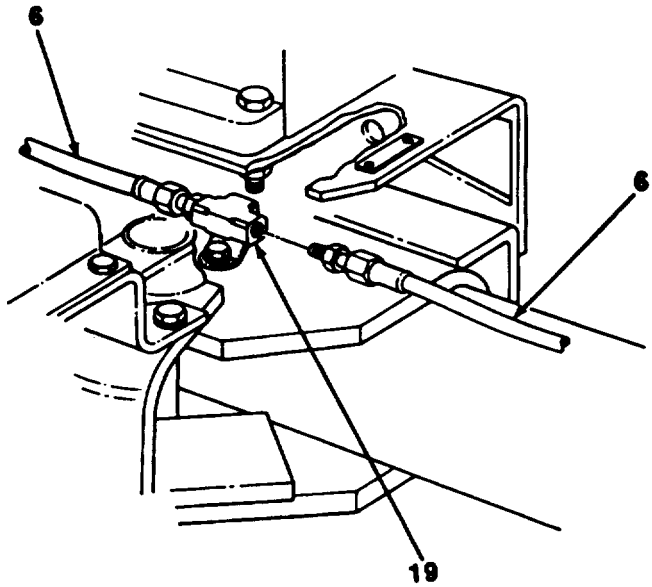

440. HYDRAULIC BRAKE LINES AND FITTINGS REPLACEMENT (Con't).

NOTE

The M832 has two clamps holding each hydraulic brake line to front axle. The M689 and the M840 have three clamps.

8. Remove screws (5), lockwashers (4), and clamps (16), as necessary, from front axle (15), and remove brake line (6) from front axle. Discard lockwashers.

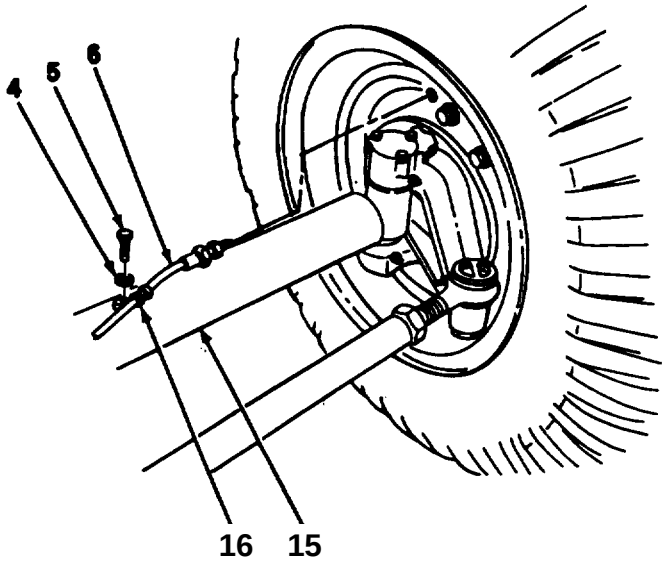

NOTE

Perform steps 9 through 11 to romove hydraullc brake line between front axle and master cylinder of front dolly.

9. Disconnect brake line (18) from multiple connector (19) at frontt axle (15).

10. Disconnect brake line (18) from multiple connector (22) at master cylinder (20).

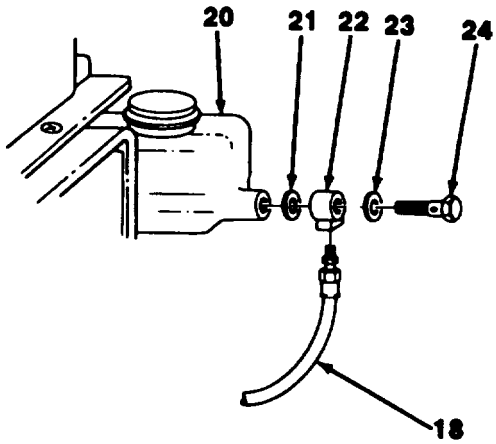

440. HYDRAULIC BRAKE LINES AND FITTINGS REPLACEMENT (Con't).

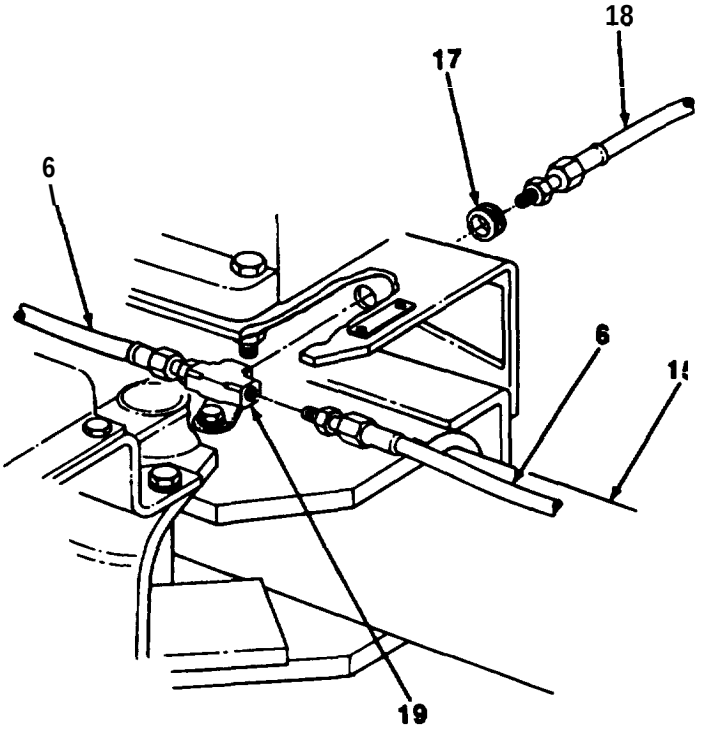

11. Remove brake line (18) and grommet (17) from front axle (15).

12. Remove fluid passage bolt (24), washer (23), multiple connector (22), and washer (21) from master cylinder.

NOTE

Perform steps 13 and 14 to remove multiple connector from front axle.

13. Disconnect brake lines (6 and 18) from multiple connector (19), if not already disconnected.

4-40. HYDRAULIC BRAKE LINES AND FITTINGS REPLACEMENT (Con't).

14. Remove bolt (26), lockwasher (25), and multiple connector (19) from front axle (15). Discard lockwasher.

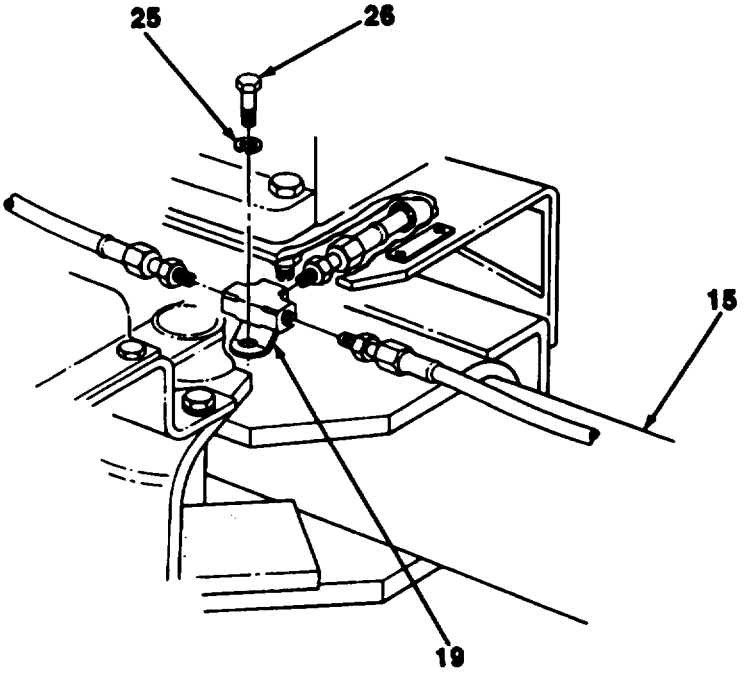

NOTE

Perform steps 15 through 17 to remove hydraulic brake line from right or left side of roar axle.

15. Disconnect brake line (36) from multiple connector (29).

16. Disconnect brake line (36) from multiple connector (37) at rear axle (32).

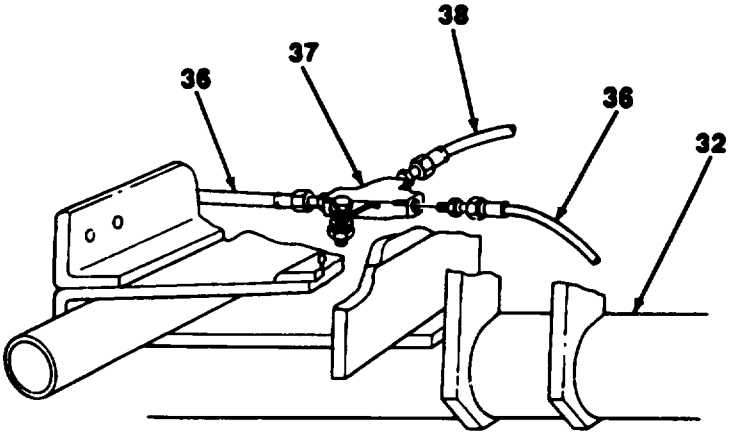

4-40. HYDRAULIC BRAKE LINES AND FITTINGS REPLACEMENT (Con't).

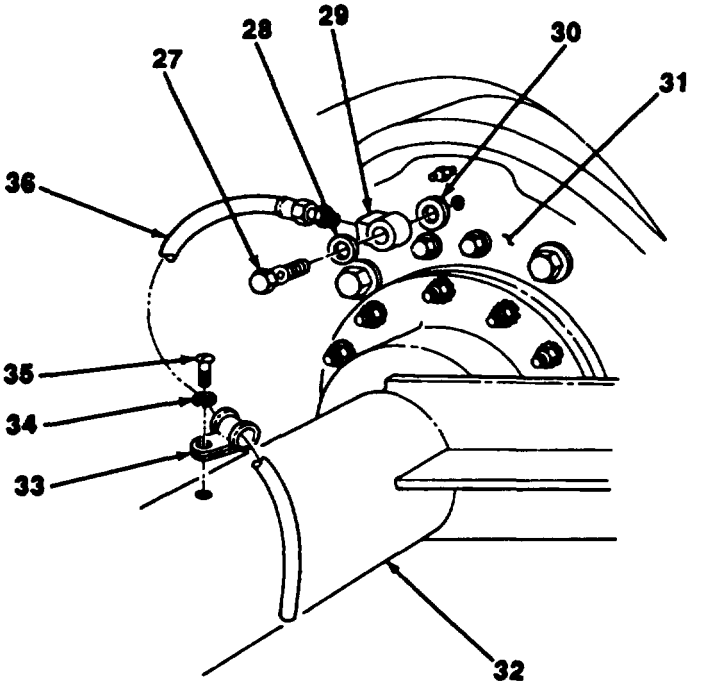

17. Remove three screws (35), lockwashers (34), and clamps (33) and brake line (38) from rear axle (32). Discard lockwashers.

18. Remove fluid passage bolt (27), washer, multiple connector (29), and washer (30) from batting plate (31).

NOTE

Perform steps 19 and 20 to remove hydraulic brake line between rear axle and master cylinder of roar dolly.

19. Disconnect brake line (38) from multiple connector (37) at rear axle (32).

4-40. HYDRAULIC BRAKE LNES AND FITTINGS REPLACEMENT (Con't).

20. Remove brake line (38) from multiple connector (41) at master cylinder (43).

21. Remove fluid passage bolt (39), washer (40), multiple connector (41), and washer (42) from master cylinder (43).

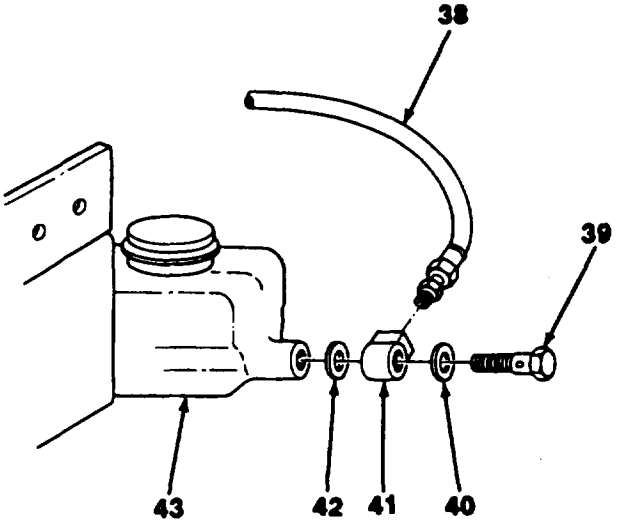

NOTE

Perform steps 22 and 23 to remove multiple connector from rear axle of M689 and M840.

22. Disconnect brake lines (36 and 38) from multiple connector (37), if not already disconnected.

23. Remove nut (45), lockwasher (46), bolt (44), and multiple connector (37) from rear axle (32). Discard lockwasher.

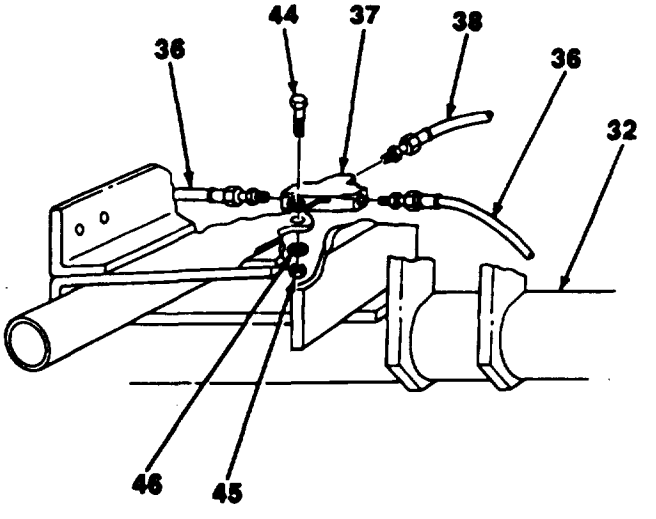

440. HYDRAULIC BRAKE LINES AND FITTINGS REPLACEMENT (Con't).

NOTE

Perform steps 24 through 26 to remove multiple connector from rear axle of M832.

24. Loosen two bolts (50) and remove shroud (47) from rear axle (32).

25. Disconnect brake lines (36 and 36) from multiple connector (37).

26. Remove bolt (49), lockwasher (46), and multiple connector (37) from rear axle (32). Discard lockwasher.

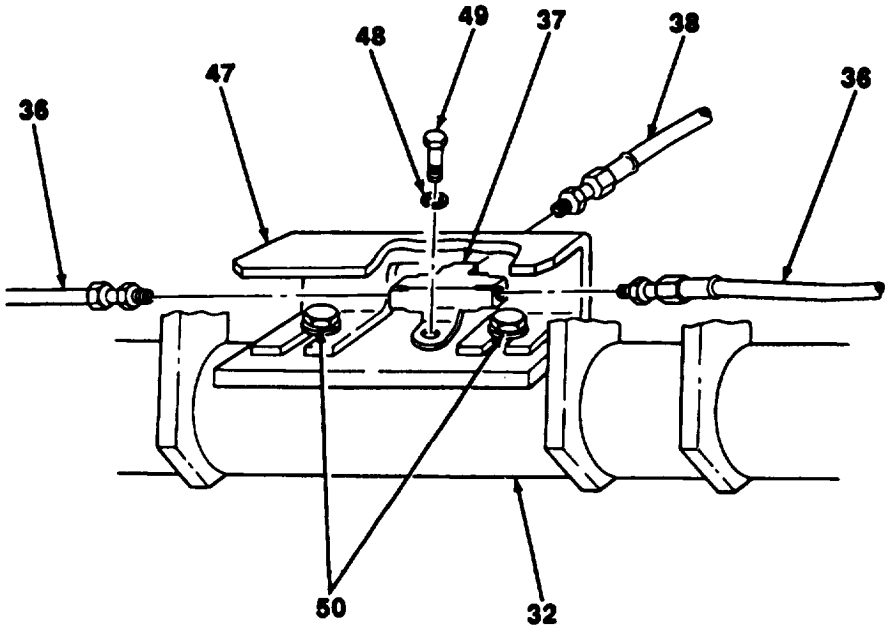

b. INSTALLATION

NOTE

Perform steps 1 through 3 to install multiple connector to rear axle of M832.

1. Instaii multiple connector (37) to rear axle (32) with new lockwasher (46) and bolt (49).

2. Connect brake lines (36 and 36) to multiple connector (37).

3. Install shroud (47) to rear axis (32) and tighten two bolts (50).

NOTE

Perform steps 4 and 5 to install multiple connector to rear axle of M689 and M840.

4. Install multiple connector (37) to rear axle (32) with bolt (44), new lockwasher (46), and nut (45).

4-40. HYDRAULIC BRAKE LINES AND FITTINGS REPLACEMENT (Con't).

5. **Connect** brake lines (36 and 33) to multiple connector (37).

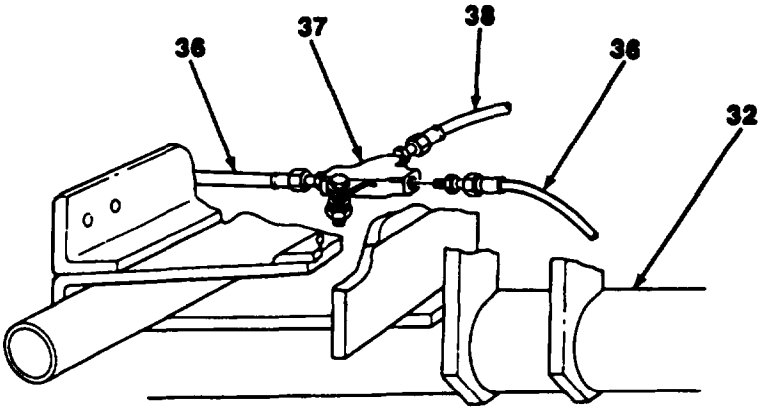

6. Install washer (42), multiple connector (41), washer (40), and fluid passage bolt (39) to master cylinder (43).

NOTE

Perform steps 7 and 8 to Install hydraulic brake line between rear axle and master cylinder of rear dolly.

7. Connect brake line (38) to multiple connector (41) at master cylinder (43).

8. Connect brake line (38) to multiple connector (37) at rear axle (32).

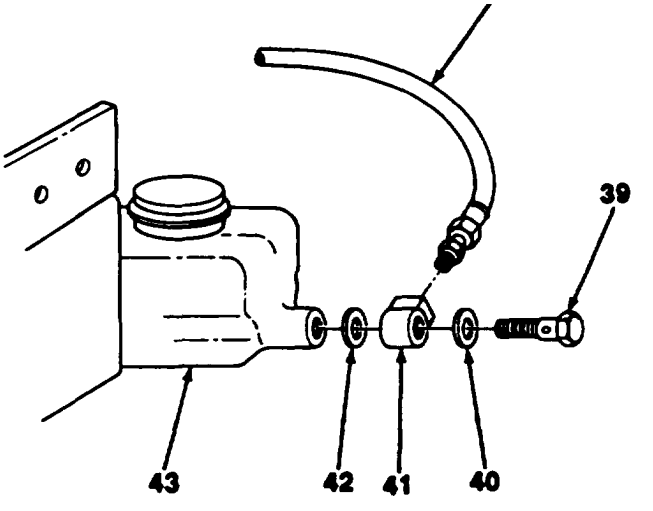

9. Install washer (30), multiple connector (29), washer (28), end fluid passage bolt (27) to backing plate (31).

NOTE

Perform steps 10 through 12 to Install hydrautic brake line to right or left side of rear axle.

10. Install brake line (36) to rear axle (32) with three clamps (33), new lockwashers (34), and screws (35).

11. Connect brake line (36) to multiple connector (37) at rear axle (32).

12. Connect brake line (36) to multiple connector (29).

4-40. HYDRAULIC BRAKE LINES AND FITTNGS REPLACEMENT (Con't).

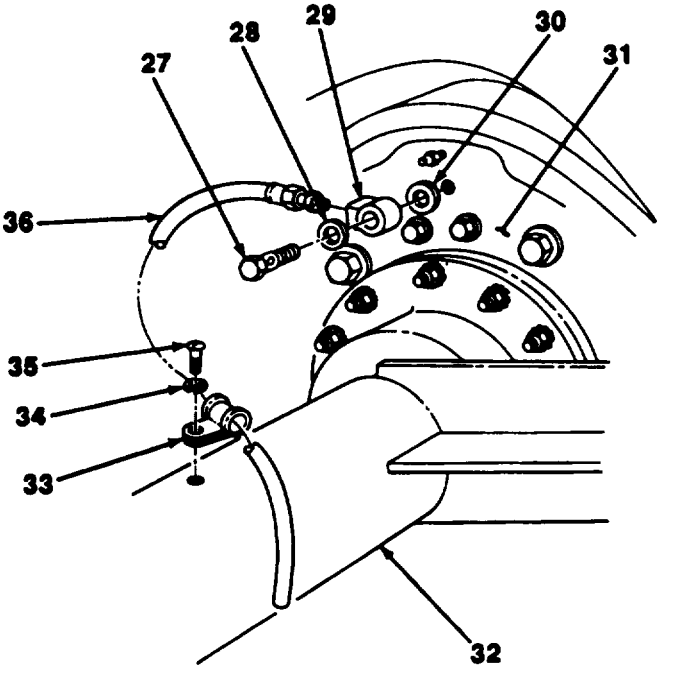

NOTE

Perform steps 13 and 14 to install multiple connector to front axle.

13. Install multiple connector (19) to front axle (15) with new lockwasher (25) and bolt (26).
14. Connect brake has (6 and 18) to multiple connector (19).

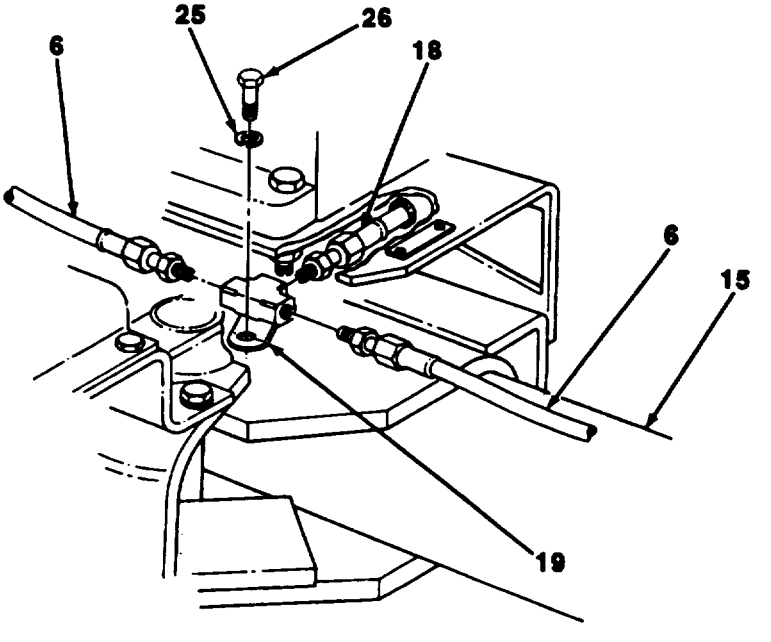

440. HYDRAULIC BRAKE LINES AND FITTINGS REPLACEMENT (Con't).

15. Install washer (21), multiple connector (22), washer (23), and fluid passage bolt (24) to master cylinder (20).

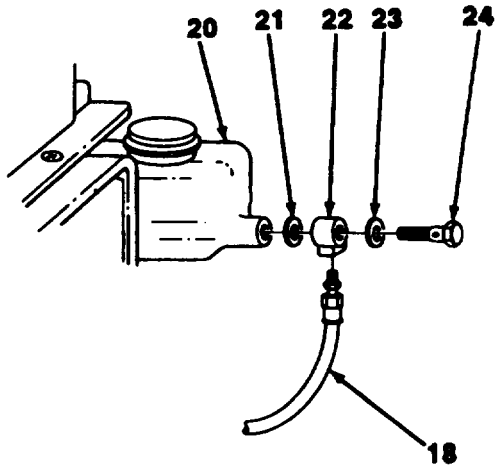

NOTE

Perform steps 16 through 18 to hydraulic brake line between front axle and master cylinder of front dolly.

16. Install grommet (17) and brake line (18) to front axle (15).

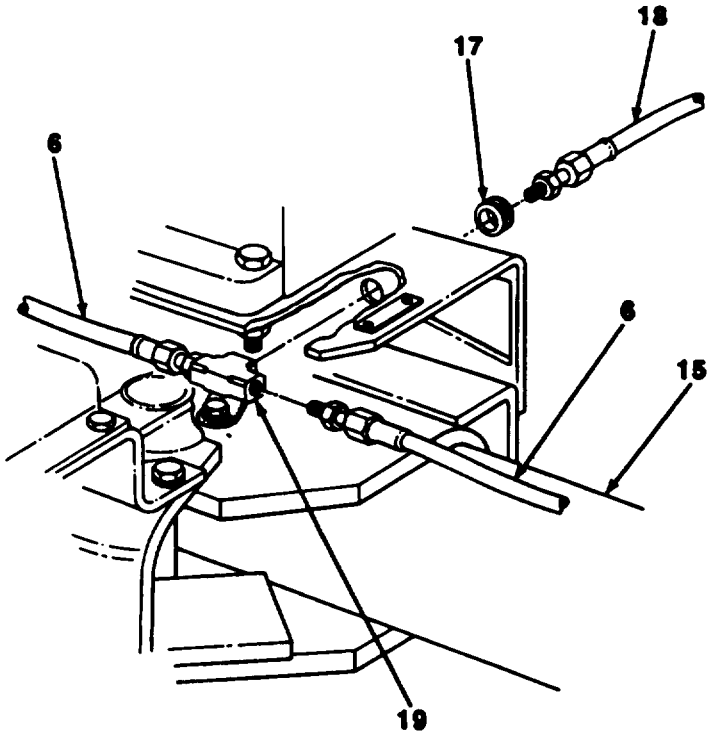

440. HYDRAULIC BRAKE LINES AND FITTINGS REPLACEMENT (Con't).

17. Connect brake line (18) to multiple connector (22) at master cylinder (20).

18. Connect brake line (18) to multiple connector (19) at front axle (15).

NOTE

- **M832 has two damps holding each hydraulic brake line to front axle. M689 and M840 have three clamps.**
- **Perform steps 19 through 21 to install hydraulic brake line to right or left aid. of front axle.**

19. Install brake line (6) to front axle (15) with clamps (16), new lockwashers (4), and screws (5), as necessary.

20. Connect brake line (6) to multiple connector (19).

21. Connect brake line (6) to brake line (7).

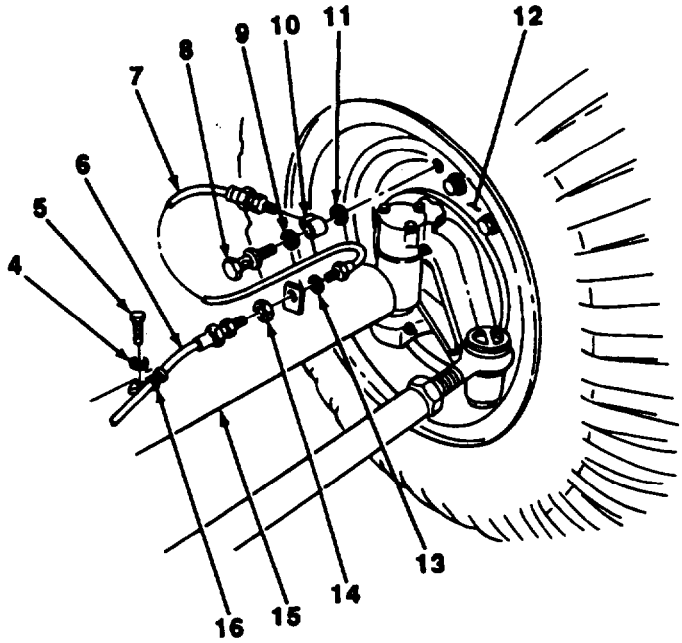

22. Install washer (11), multiple connector (10), washer (9), and fluid passage bolt (8) to backing plate (12).

NOTE

Perform steps 23 through 25 to install hydraulic brake line at each steering knuckle of front axle.

23. Connect brake line (7) to multiple connector (10).

24. Install end of brake line (7) to front axle (15) with washer (13) and nut (14).

25. Connect brake line (6) to brake line (7).

4-40. HYDRAULIC BRAKE LINES AND FITTINGS REPLACEMENT (Con't).

28. **Close draincock (2) on air reservoir (1) by rotating handle (3) of draincock clockwise.**

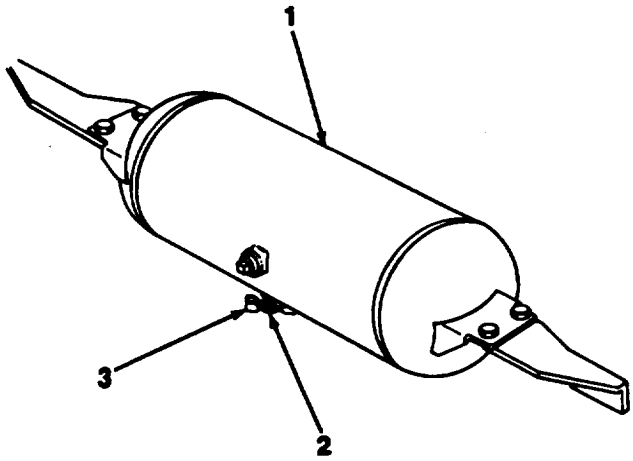

FOLLOW-ON TASKS:

- Install platform (for brake tines at rear axle (M832 except SN J089-001 thru 159 and J017-180 thru 350) (para 4-52).
- Install platform (for brake lines at rear axle) (M832 SN J089-001 thru 159 and J017-160 thru 350 only) (para 4-53).
- Bleed brakes (para 4-38).

4-41. AIR CYLINDER REPAIR.

This Task Covers:

a. Disassembly
b. Cleaning and Inspection
c. Assembly

Initial Setup:

Equipment Conditions:

- Air cylinder removed (para 4-39).

Tools/Test Equipment:

- General mechanic's tool kit
- Common no. 1 shop set

Materials/Parts

- Detergent (Item 4, Appendix E)
- Rags (Item 11, Appendix E)
- Dry cleaning solvent (Item 14, Appendix E)
- Marker tags (Item 16, Appendix E)
- One cup
- One retainer
- Eight lockwashers

a. DISASSEMBLY

WARNING

Head is under spring pressure. Apply pressure to head as bolts are removed to prevent heed from flying outward and injuring personnel.

1. Remove eight bolts (8) and lockwashers (9). Release pressure on head (7) gradually and remove head from cylinder (1). Discard lockwashers.

2. Remove head (7), spring (6), and rubber boot (5) from piston (4).

3. Remove retainer (3) and cup (2) from piston (4). Discard retainer and cup.

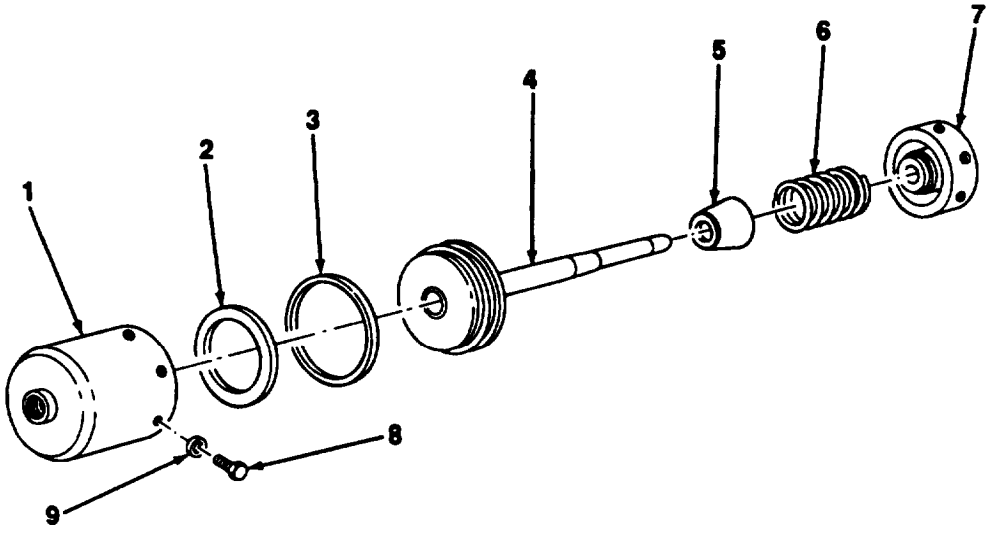

4-41. AIR CYLINDER REPAIR (Con't).

b. CLEANING AND INSPECTION

WARNING

Dry cleaning solvent, P-D-680, toxic and flammable. Always wear protective goggles and gloves, and use only in a well-ventilated area. Avoid contact with skin, and clothes and DO NOT breathe vapors. DO NOT use near open flame or excessive heat The solvent's flash point b 100°F-138°F (38°C-59°C). If you become dizzy while using cleaning solvent, immedbtely get fresh air and medical help. If solvent contacts eyes, immediatety wash your eyes and get medical aid.

1. Clean metal parts with dry cleaning solvent.
2. Inspect metal parts for cracks, breaks, corrosion, or other damage. Replace damaged parts.
3. Wash rubber boot with detergent and water.
4. Inspect rubber boot for damage and deterioration. Replace if damaged or deteriorated.

c. ASSEMBLY

1. Install new cup (2) and new retainer (3) to piston (4).
2. Install spring (6), rubber boot (5), and head (7) to piston (4).
3. use vise or visegrip pliers to compress piston (4) and head (7) and hold in place.
4. Install cylinder (1) over head (7) and install eight new lockwashers (9) and bolts (8).
5. Remove vise or visegrip pliers.

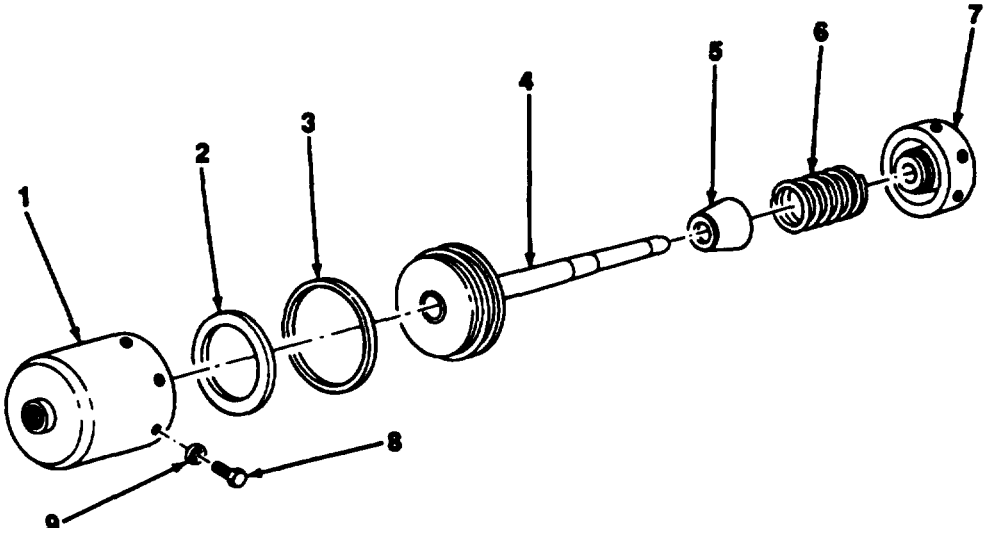

FOLLOW-ON TASKS:

- Install air cylinder (para 4-39).

4-42. AIR COUPLING REPLACEMENT.

This Task Covers:

a. Removal

b. Installation

Initial Setup:

Equipment Conditions:

- Dolly set parked on level surface with handbrakes applied (para 2-2).

Tools/Test Equipment:

- General mechanic's tool kit

Materials/Parts:

- ' Tie -down strap (item 15, Appendix E)
- Antiseizing tape (Item 17, Appendix E)
- One preformed packing
- Two lockwashers

a. REMOVAL

1. Rernove preformed packing (6) from air coupling (7). Discard preformed packing.
2. Remove air coupiing (7), data plate (8), and tie-down strap (2) from air hose (1). Discard tie-down strap.
3. Remove two screws (3), lockwashers (4), and retainer (5) from air coupling (7). Discard iockwashers.

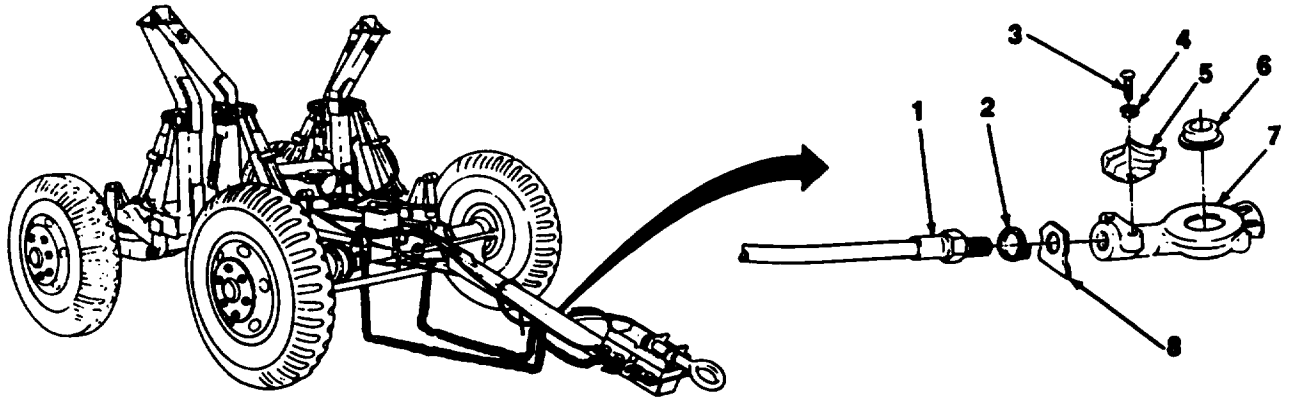

b. INSTALLATION

1. Install retainer (5) to air coupling (7) with two new lockwashers (4) and screws (3)-
2. Apply antiseizing tape to threads of air hose (1).
3. Install data plate (8) end air coupling (7) to air hose (1) and install new tie-down strap (2).
4. Instali new preformed packing (6) on air coupling (7).

4-43. AIR RESERVOIR REPLACEMENT.

This Task Covers:

a. Removal
b. Impaction
c. Installation

Initial Setup:

Equipment Conditions:

- Relay valve removed (M689 and M840) (para 4-44).

Tools/Test Equipment:

- General mechanic's tool kit

Materials/Parts:

- Antiseizing tape (Item 17, Appendix E)
- **Six lockwashers**

a. REMOVAL

1. Open draincock (6 or 16) on air reservoir (1 or 10) to release air pressure. Close draincock (6 or 16).

2. Remove air hose (7) from air reservoir (1 or 10).

3. For the M689 and M840, remove four nuts (5), lockwashers (4), washers (3), and screws(2) from air reservoir (1). Remove air resevoir (1) from dolly set. Discard lockwashers.

4. For M689 and M640, remove draincock (6) from air reservoir (1).

NOTE

Steps 5 through 8 apply only to the M832 dolly set.

5. Remove two screws (15), lockwashers (14), and washers (18) from base of air resevoir (10) on suspension bar. Discard lockwashers.

6. Remove screw (13) and lockwasher (12) from tank clamp (11). Remove air reservoir (10) from dolly set. Discard lockwasher.

7. Remove two screws (9) and lockwashers (8) from tank clamp (11) mounting points on suspension bar. Discard lockwashers.

8. Remove draincock (16) and pipe bushing (17) from air reservoir (10).

b. INSPECTION

Inspect air reservoir, pipe bushing, draincock, tank clamp, and air hose for frays, tears, breaks, cracks, and bends. Replace damaged hardware.

4-43. AIR RESERVOIR REPLACEMENT (Con't).

c. INSTALLATION

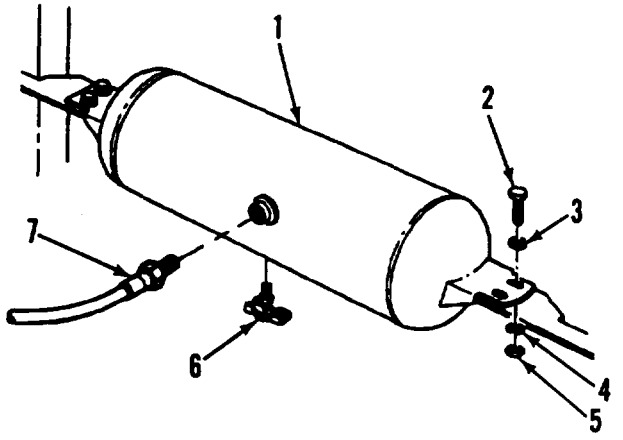

M689 AND M840

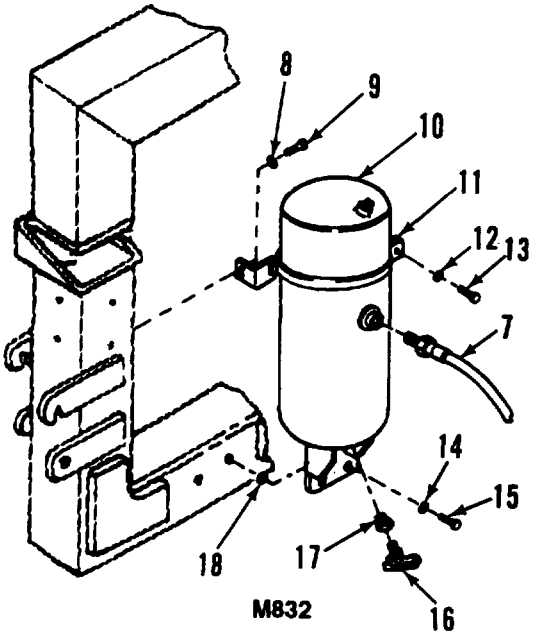

M832

NOTE

Steps 1 through 3 apply only to the M832 dolly set.

1. Apply antiseizing tape to threads of pipe bushing (17) and threads of draincock (16).
2. Install pipe bushing (17) and draincock (16) in air reservoir (10).
3. Install tank clamp (11) and two new lockwashers (8) and screws (9) on suspension bar.
4. For M689 and M840, apply antiseizing tape to threads of draincock (6) and install in air reservoir (1).
5. Position air reservoir (1 or 10) on dolly set.
6. For the M689 and M840, install air reservoir (1) on dolly set with four screws (2), washers (3), new lockwashers (4), and nuts (5).
7. For the M832, install two washers (18), new lockwashers (14), and screws (15) through base of air reservoir (10) and on suspension bar.
8. For the M832, install screw (13) and new lockwasher (12) through tank clamp (11) on air resevoir (10).
9. Install air hose (7) on air reservoir (1 or 10).

FOLLOW-ON TASKS:

- Install relay valve (M689 and M840) (para 4-44).

4-44. RELAY VALVE REPLACEMENT.

This Task Covers:

a. Removal
b. Installation
c. Testing

***Initial** Setup:*

Equipment Conditions:

- Dolly set parked on level surface with handbrakes applied (para 2-2)

Tools/Equipment:

- General mechanic's tool kit

Materials/Parts:

- Detergent (Item 4, Appendix E)
- Antiseizing tape (Item 17, Appendix E)

Personnel Required: Two

a. REMOVAL

NOTE

Following steps refer to removal of relay valve for M689 and M840 dolly sets. Removal steps for M832 are similar.

1. Open draincock on air reservoir and drain air. Close draincock.
2. Disconnect service air hose (4) from relay valve (3).
3. Disconnect emergency air hose (5) from relay valve (3).
4. Disconnect air hose (6) from relay valve (3).

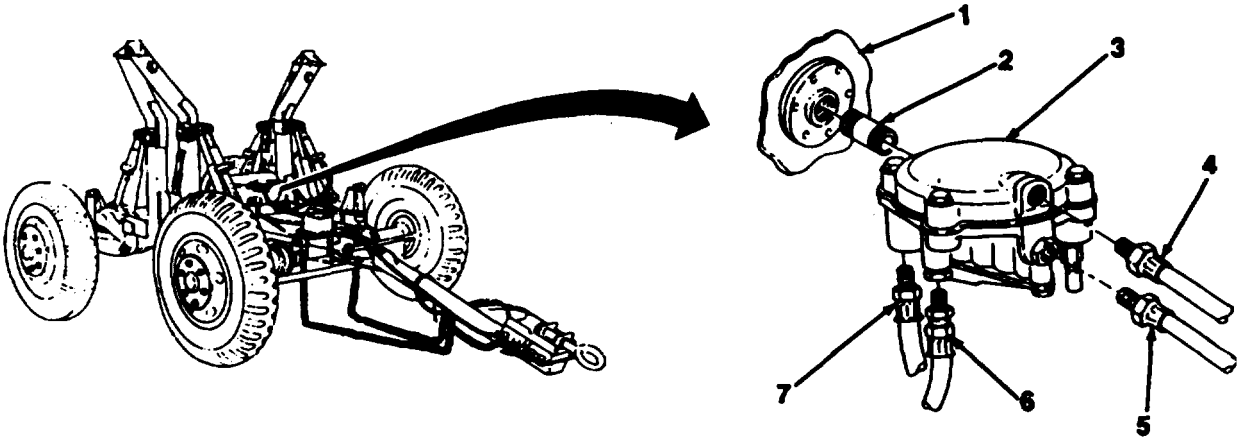

4-44. RELAY VALVE REPLACEMENT (Con't).

5. Disconnect air hose (7) from relay valve (3).

6. Remove relay valve (3) and nipple (2) from air reservoir (1).

b. INSTALLATION

1. Apply antisizing tape to threads of nipple (2) and air hoses (4,5,6, and 7).

2. Install nipple (2) and relay valve (3) on air reservoir(1).

3. Connect air hose (7) to relay valve (3).

4. Connect air hose (6) to relay valve (3).

5. Connect emergency air hose (5) to relay valve (3).

6. Connect service air hose (4) to relay valve (3).

c. TESTING

1. Couple dolly set to towing vehicle (para 2-14).

2. Apply brakes of towing vehicle and cheek that brakes of dolly set apply.

3. Release brakes of towing vehicle and check that brakes for dolly set release.

4. Close valve on emergency air line of towing vehicle (refer to towing vehicle maintenance manual), and disconnect emergency air coupling of dolly set. Cheek that brakes of dolly set apply.

5. Connect emergency air coupling and open valve on emergency air line of towing vehicle. Check that brakes of dolly set release.

6. Test for air leaks at body of relay valve and at hose connections using detergent and water solution. No leakage is permissible. Tighten air hose fittings or replace air hoses as necassary.

445. AIR HOSE REPLACEMENT.

This Task Covers:

a. Removal
b. Installation
c. Testing

Initial Setup:

Equipment Conditions:

- Dolly set perked on level surface with handbrakes applied (para 2-2)

Tools/Equipment:

- General mechanic's tool kit

Materials/Parts:

- Detergent (Item 4, Appendix E
- Antiseizing tape (Item 17, Appendix E)

Personnel Required: Two

a. REMOVAL

NOTE

Air hoses on all dolly sets are similarr. Following steps are typical of steps performed to remove air hoses. Service air hose is shown.

1. Open draincock on air reservoir and drain air. Close draincock.
2. Disconnect service air hose (2) from relay valve (1).
3. Remove service air hose (2) from dolly set.

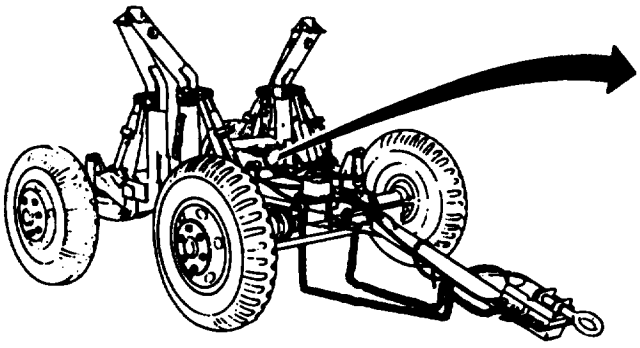

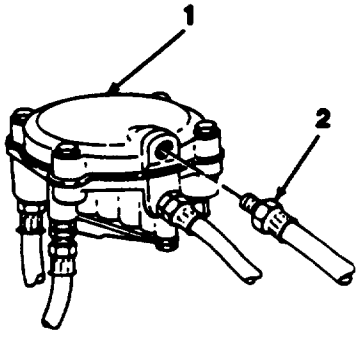

b. INSTALLATION

1. Position service air hose (2) to dolly set.
2. Apply antisizing tape to threads of service air hose (2) and connect to relay valve (1).

4-45. AIR HOSE REPLACEMENT.

c. TESTING

1. Couple dolly set to towing vehicle (para 2-14).

2. Test for air leaks at air hose connection using detergent and water solution. No leakage is permissible. Tighten air hose fitting or replace air hose as necessary.

Section X. WHEELS, HUBS, AND BRAKEDRUMS MAINTENANCE

Paragraph Title	Page Number
Hub, Wheel Bearings, and Brakedrum Replacement	4-122
Tire and Tube Maintenance	4-125
Wheel Replacement	4-120

4-46. WHEEL REPLACEMENT.

This Task Covers:

a. Removal b. Installation

Initial Setup:

Equipment Conditions:
- Dolly set parked on level surface with handbrakes applied (para 2-2).

Tools/Test Equipment
- Common no. 1 shop set

a. REMOVAL

1. Loosen, but do not remove, six nuts (3).
2. Position jack under axle (1) near wheel (2) to be removed. Raise axle until wheel is off ground.
3. Remove six nuts (3).
4. Remove wheel (2) from tub (4).

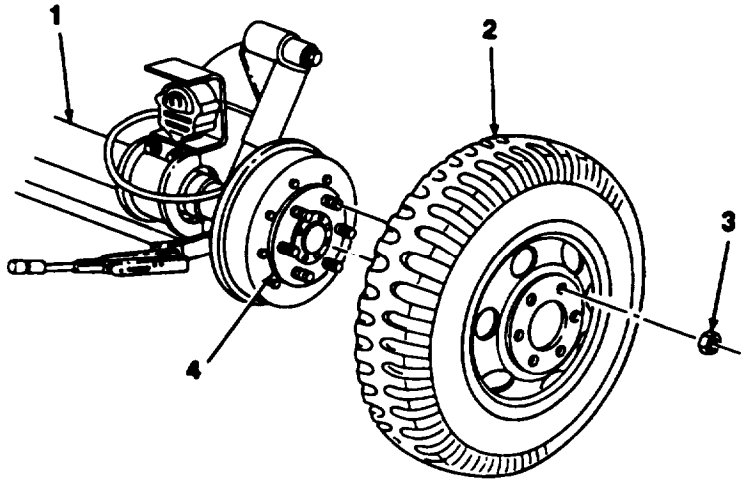

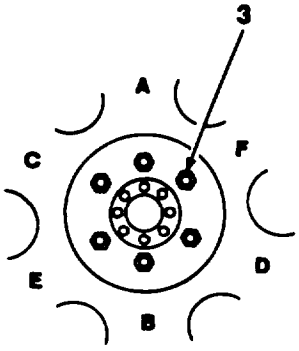

TIGHTENING SEQUENCE

4-46. WHEEL REPLACEMENT (Con't).

b. INSTALLATION

1. Position wheel (2) on hub (4).
2. Install six nuts (3) fingertight.
3. Lower axle (1) until wheel (2) is on ground. Remove jack.
4. Tighten six nuts (3) using tightening sequence shown. Torque nuts to 450-500 lb.-ft. (610-678 N•m).

4-47. HUB, WHEEL BEARINGS, AND BRAKEDRUM REPLACEMENT

This Task Covers:

a. Removal
b. Cleaning and Inspection
c. Installation and Adjustment

Initial Setup:

Equipment Conditions:

- Wheel removed (para 4-46).

Tools/Test Equipment

- General mechanic's tool kit
- Common no. 1 shop set

References:

- TM 9-214

Materials/Parts:

- Grease (Item 7, Appendix E)
- Rags (Item 11, Appendix E)
- Dry cleaning solvent (Item 14, Appendix E)
- One Gasket
- One seal
- Ten lockwashers

WARNING

DO NOT handle brakeshoes, brakedrums, or other brake components unless area has been properly cleaned. There may be asbestos dust on these components which can be dangerous. If you touch it or breathe it, Wear an approved filter mask and gloves. Never use compressed air or a dry brush to clean brake components. Duet may be removed using an industrial-type vacuum cleaner. Clean dust or mud away from brake components with water end a wet, soft brush or cloth. Failure to follow this warning may result in serious Illness or death to personnel.

a. REMOVAL

NOTE

When hub end brakedrum removal is required for an equipment condition In another paragraph, perform only steps 1 through 3.

1. Remove eight bolts (10), cap (9), and gasket (8) from end of hub (3). Discard gasket.
2. Remove nut (7), keywasher (6), nut (5), and outer bearing (4).

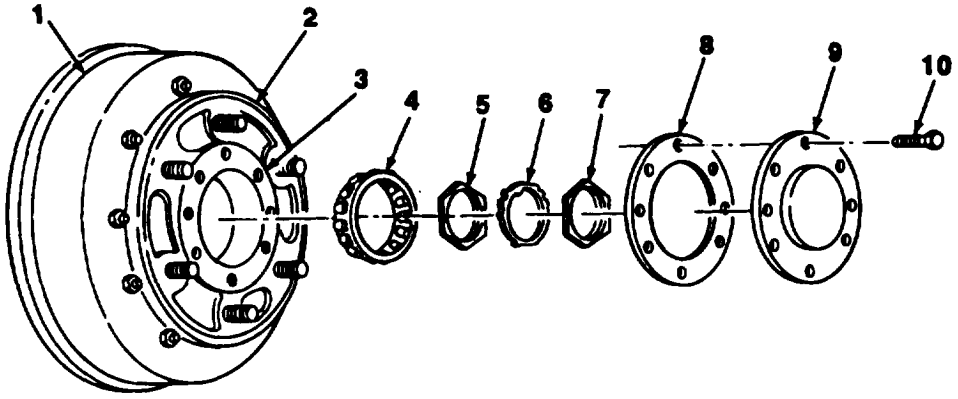

4.47. HUB, WHEEL BEARINGS, AND BRAKEDRUM REPLACEMENT (Con't).

3. Remove brakedrum (1), adapter(2), rub (3), and inner bearing (16) as an assembly.

4. Remove ten nuts (15), lockwashers (14), and bolts (11) and remove brakedrum (1) from adapter (2). Discard lockwashers.

5. Remove hub (3) from adapter (2).

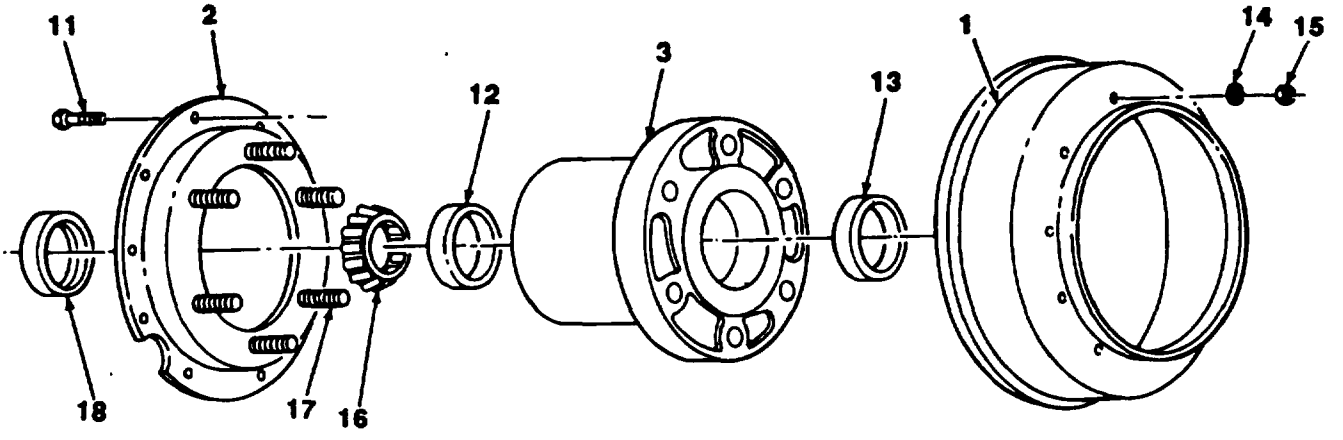

6. Remove seal (18). Discard seal.

7. Remove inner bearing (16) and two bearing cones (12 and 13) from hub (3).

NOTE

Wheel studs for wheels at right side of dolly set are marked "R" for right-hand threads. Studs for wheels at left side are marked "L" for left-hand threads.

8. If damaged, remove wheel studs (17).

b. CLEANING AND INSPECTION

WARNING

- **DO NOT handle brakeshoes, brakedrums, or other brake components unless area has been property cleaned.There may be asbestos dust on these components which can be dangerous if you touch it or breathe it. Wear an approved filter mask end gloves. Never use compressed air or a dry brush to dean brake components. Dust may be removed using an Industrial-type vacuum cleaner. Clean dust or mud away from brake components with water and a wet, soft brush or cloth. Failure to follow this warning may result in serious Illness or death to personnel.**

- **Dry cleaning solvent, P-D-680, is toxic and flammable. Always wear protective goggles and gloves, and use only in a well-ventilated area. Avoid contact with skin, eyes, and clothes, and DO NOT breathe vapors. DO NOT use near open flame or ● xcesdve heat. The solvent's flash point is 100°F-138°F (38°C-59°C). If you become dizzy while using cleaning solvent, immediately get fresh air and medical help. If solvent contacts eyes, immediately wash your eyes and get medical aid.**

1. Use dry cleaning solvent to remove grease and oil from all metal parts. Dry thoroughly.

447. HUB, WHEEL BEARINGS, AND BRAKEDRUM REPLACEMENT (Con't).

2. Clean and inspect bearings and bearing cones in accordance with TM 9-214.
3. Inspect brakedrum and hub for cracks or other signs of damage.
4. Inspect braking surface of brakedrum for scoring or uneven wear.

c. INSTALLATION AND ADJUSTMENT

1. If removed, install new wheel studs (17).
2. Lubricate and install two bearing cones (12 and 13) and her bearing (16) into hub (3).
3. Install new seal (18).
4. Install hub (3) to adapter (2).
5. Install brakedrum (1) to adapter (2) with ten bolts (11), new lockwashers (14), and nuts (15).
6. Install inner bearing (16), hub (3), adapter (2), and brakedrum (1) as an assembly.

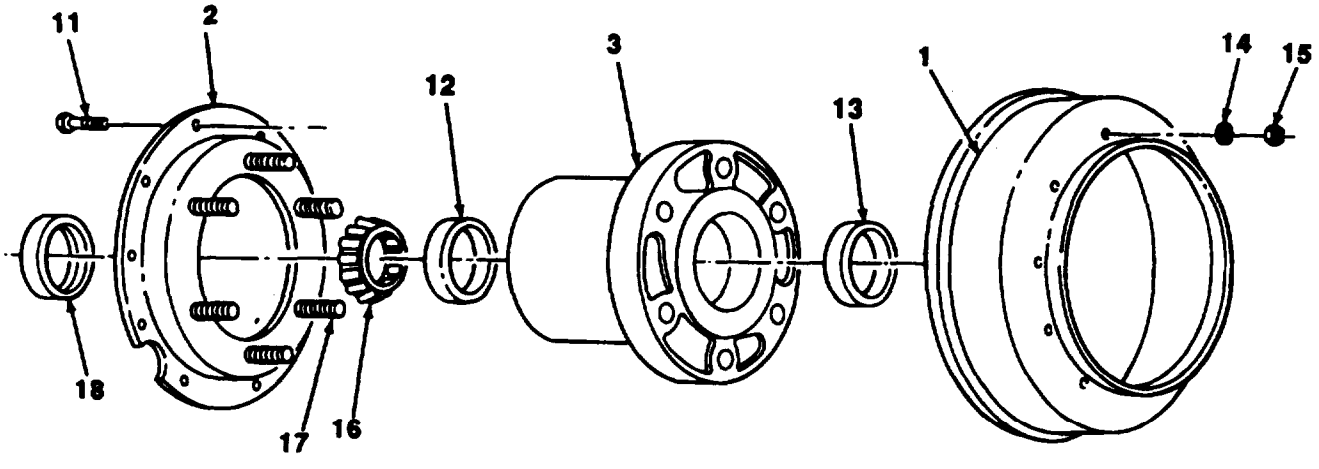

7. Lubricate and install outer bearing (4). Install nut (5).

NOTE

Perform steps 8 and 9 to adjust bearlngs.

8. While rotating brakedrum (1), tighten nut (5) until hub (3) and outer and inner bearings (4 and 16) start to bind.
9. Back off nut (5) about 1/8 turn or until binding stops.
10. Install keywasher (6) and nut (7). Tighten nut.
11. Install new gasket (8) and cap (9) with eight bolts (10).

4-47. HUB, WHEEL BEARINGS, MD BRAKEDRUM REPLACEMENT (Con't).

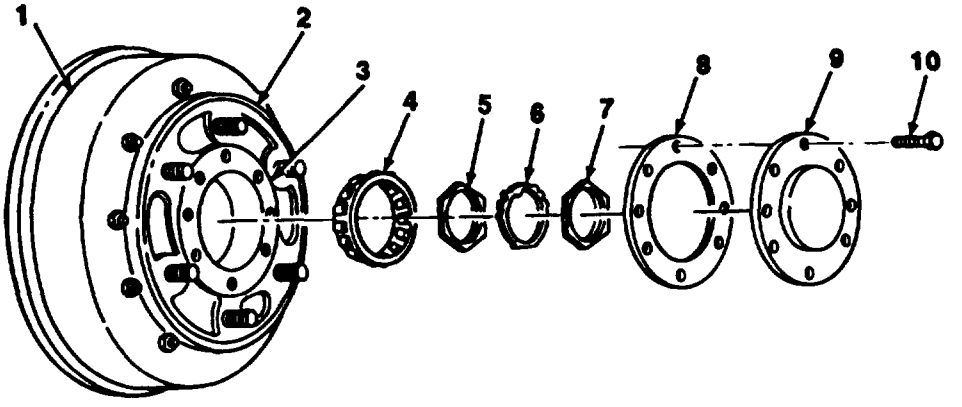

FOLLOW-ON TASKS:

- Install wheel (para 4-46).

4-48. TIRE AND TUBE MAINTENANCE.

For information on tire and tube maintenance, refer to TM 9-2610-200-14.

Section XI. FRAME AND TOWING ATTACHMENTS MAINTENANCE

Paragraph Title	Page Number
Binder Replacement (M840)	4-128
Coupling Clamp and Retaining Block Replacement (M689 and M832)	4-126
Drawbar Assembly Maintenance	4-142
Lifting-leveling Jack Repair (M689)	4-149
Lifting-leveling Jack Replacement (M689)	4-148
Positioning Lever Repair (M840 and M832 Except SN J089-001 thru 159 and J017-160 thru 350)	4-146
Strut Maintenance (M832)	4-151
Strut Maintenance (M840)	4-153
Toolbox and Platform Maintenance (M832 Except SN J089-001 thru 159 and J017-160 thru 350)	4-134
Toolbox and Platform Maintenance (M832 SN J089-001 thru 159 and J017-160 thru 350 Only)	4-136
Toolbox and Step Plate Replacement (M840)	4-130

4-49. COUPLING CLAMP AND RETAINING BLOCK REPLACEMENT (M689 AND M832).

This Task Covers:

a. Removal **b. Installation**

Initial Setup:

Equipment Conditions:

- Front and rear dollies uncoupled (para 2-11).

Materials/Parts:

- One lockwasher

Tools/Test Equipment:

- General mechanic's tool kit

NOTE

The M689 and M832 dolly sets have two retaining blocks and two coupling clamps.

a. REMOVAL

NOTE

. Perform steps 1 through 4 to remove retaining block

• Perform steps 5 and 6 to remove coupling clamp.

1. Remove screw (11) and lockwasher (4) and disconnect lanyard assembly (5) from dolly. Discard lockwasher.
2. Loosen captive bolt (10) of lanyard assembly (5), and remove retaining block (6) from lanyard assembly (5).
3. For the M832, remove nut (9), washer (8), and eyebolt (7) from retaining Mock (6).
4. For the M689, remove eyebolt (7) from retaining block (6).
5. Remove screw (2) and washer (3) from coupling clamp (l).
6. Remove coupling clamp (1) from dolly.

4-49. COUPLING CLAMP AND RETAINING BLOCK REPLACEME (M689 AND M832) (Con't).

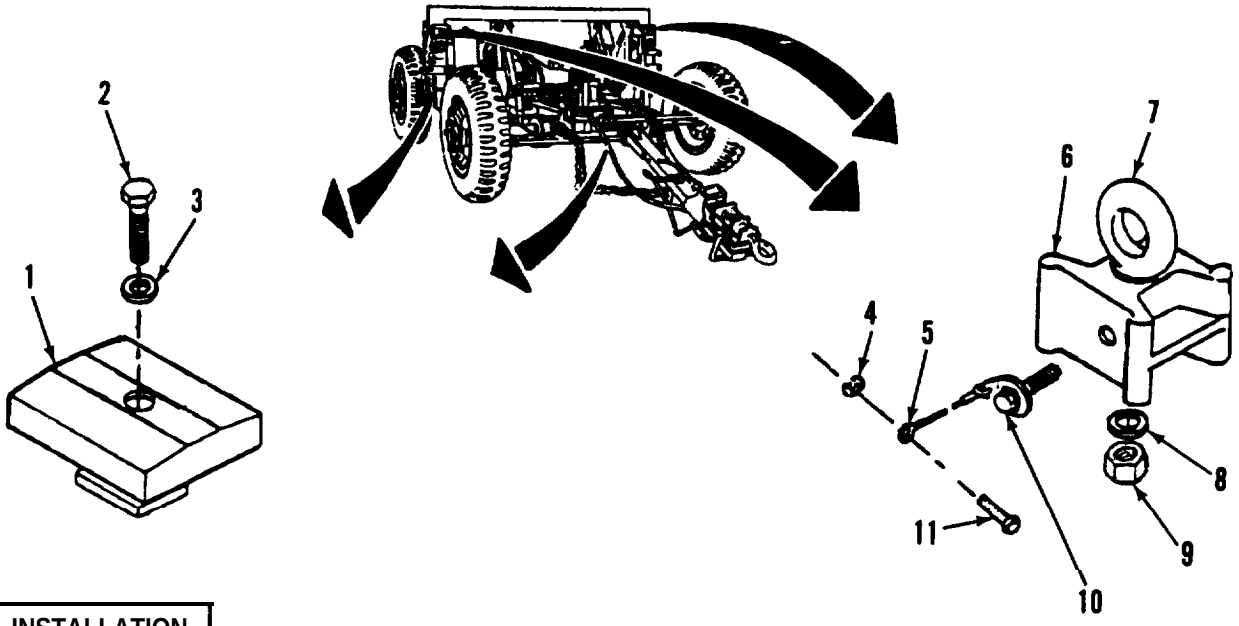

b. INSTALLATION

NOTE

- **Perform steps 1 and 2 to install coupling clamp.**
- **Perform steps 3 through 6 to install retaining block.**
- **When replacing captive screw, stake threads.**

1. Position coupling clamp (1) on dolly.
2. Install washer (3) and screw (2) on coupling clamp (1).
3. For the M689, install eyebolt (7) on retaining block (6).
4. For the M832, install eyebolt (7), washer (8), and nut (9) on retaining block (6).
5. Position lanyard assembly (5) on retaining block (6), and tighten captive bolt (10) of lanyard assembly (5).
6. Connect lanyard assembly (5) to dolly with screw (11) and new lockwasher (4).

FOLLOW-ON TASKS:

- Couple front and rear dollies (para 2-19).

4-50. BINDER REPLACEMENT (M840).

This Task Covers:

a. Removal

b. Installation

Initial Setup:

Equipment Conditions:

- Dolly set parked on level surface with handbrakes applied (para 2-2).

Tools/Test Equipment

- General Mechanic's tool kit
- Common no. 1 shop set

Materials/Parts:

- Adhesive (Item 2, Appendix E)
- Two sleeves

8. REMOVAL

NOTE

Dolly set has four binder bolts.

1. Remove binder bolt (6) and nut (4) from doily (2).
2. Cut wire rope (7), if necessay, to remove wire rope from dolly (2) and retaining ring (5).
3. Remove retaining ring (5) from nut (4).

NOTE

Washer consists of a stool flatwasher bonded to a rubber washer.

4. **Remove washer (3) from nut *(4).***

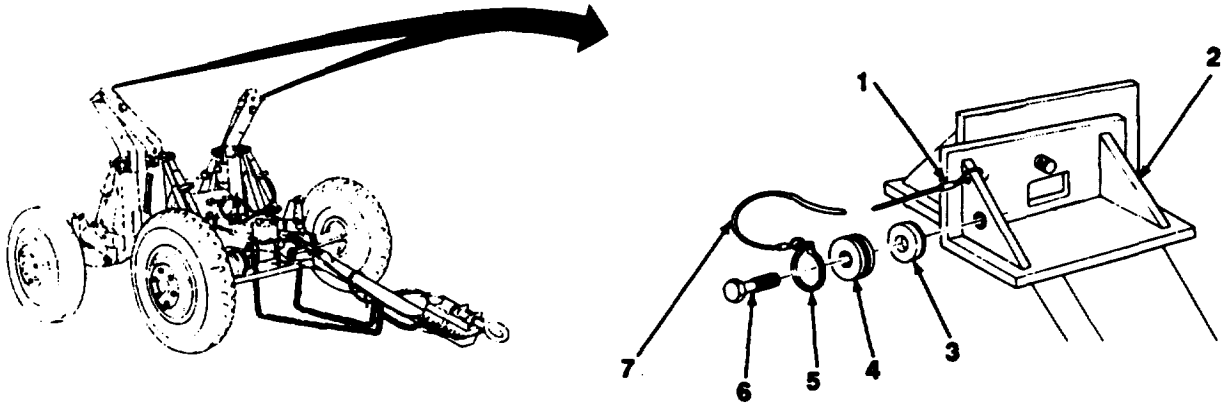

4-50. BINDER REPLACEMENT (M840) (Con't).

b. INSTALLATION

1. Install washer (3) to nut (4) using adhesive.
2. Install retaining ring (5) to nut (4).
3. Install wire rope (7) to dolly (2) and retaining ring (5) using two new sleeves (1).
4. Install nut (4) and binder bolt (6) to dolly (2).

4-51. TOOLBOX AND STEP PLATE MAINTENANCE (M840).

This Task Covers:

a. Removal
b. Disassembly
c. Assembly
d. Installation

Initial Setup:

Tools/Test Equipment:

- General mechanic's tool kit
- Common no. 1 shop set

Materials/Parts:

- Adhesive (item 2, Appendix E)
- Thirteen lockwashers
- Twenty-seven rivets

a. REMOVAL

1. Remove six bolts (4), washers (3), and toolbox (1) from rear dolly (2).

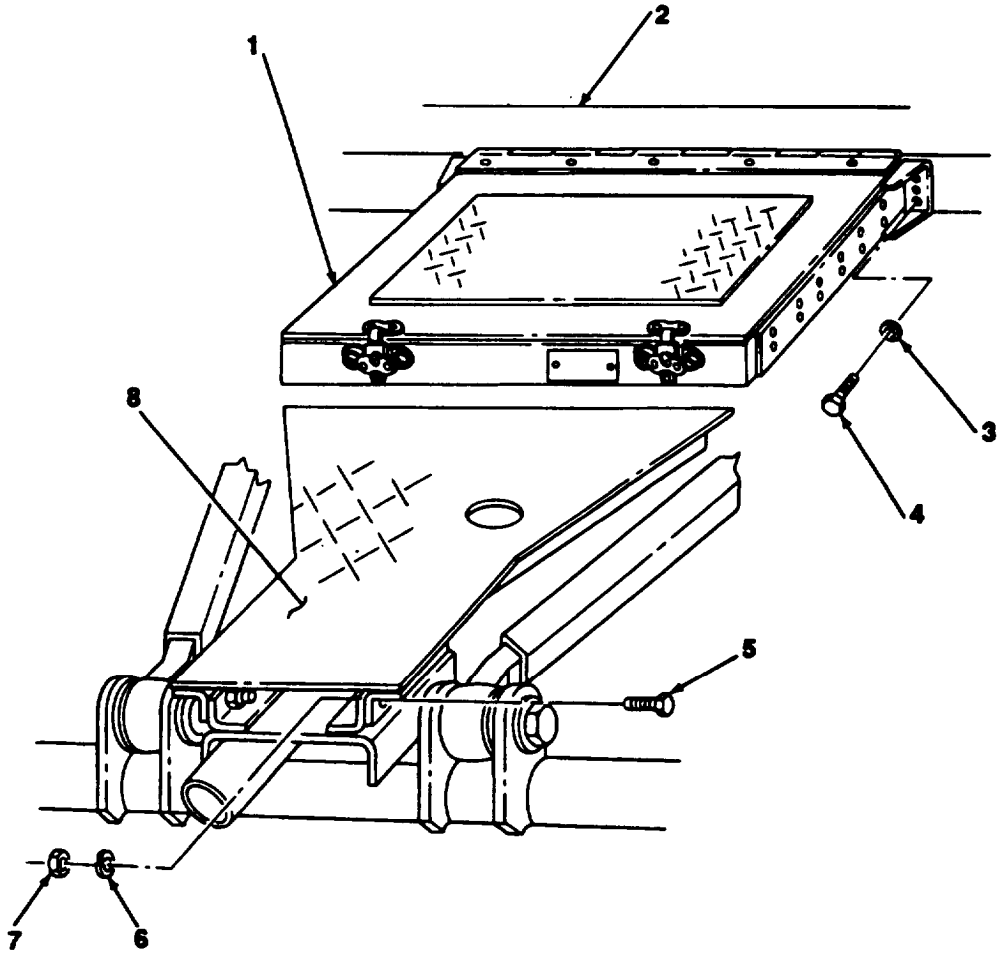

4-51. TOOLBOX AND STEP PLATE MAINTENANCE (M840) (Con't).

NOTE

Perform stops 2 and 3 to remove step plate.

2. Remove eight nuts (7), lockwashers (6), and bolts (5). Discard lockwashers.
3. Remove step plate (8) from rear dolly (2).

b. DISASSEMBLY

1. Remove five nuts (19), lockwashers (18), bolts (14), and hinge (12) with door (11) from toolbox (1). Discard lockwashers.
2. Remove five rivets (13) and hinge (12) from door (11). Discard rivets.
3. Remove 12 rivets (16) and three data plates (1 5). Discard rivets.
4. **Remove four rivets (10) and two catches (9). Discard rivets.**

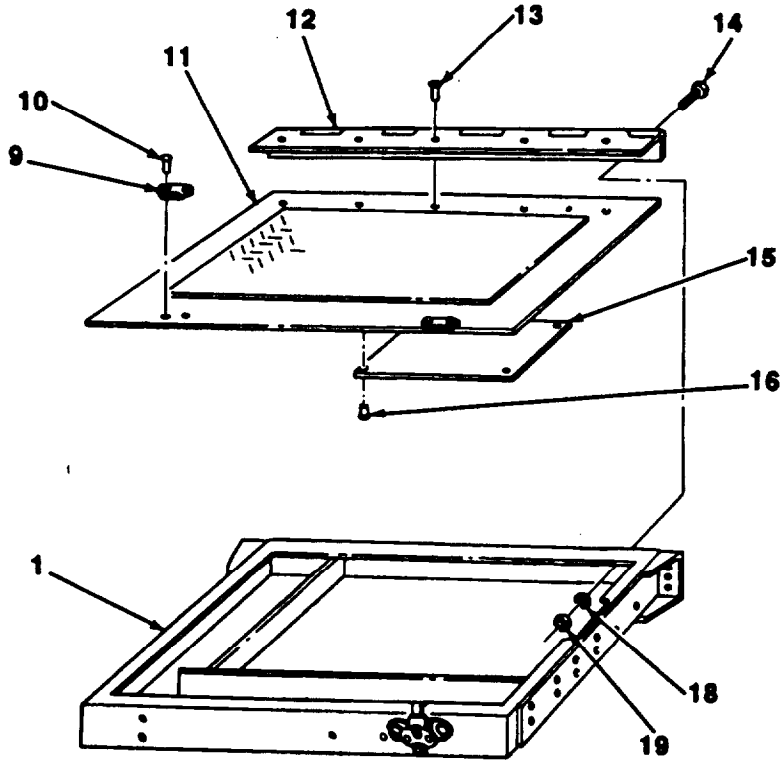

4-51. TOOLBOX AND STEP PLATE MAINTENANCE (M840) (Con't).

5. Remove two rubber strips (17) and two rubber strips (20) from toolbox (1).
6. Remove four rivets (23) and two clamping catches (24). Discard rivets.
7. Remove two rivets (22) and data plate (21). Discard rivets.

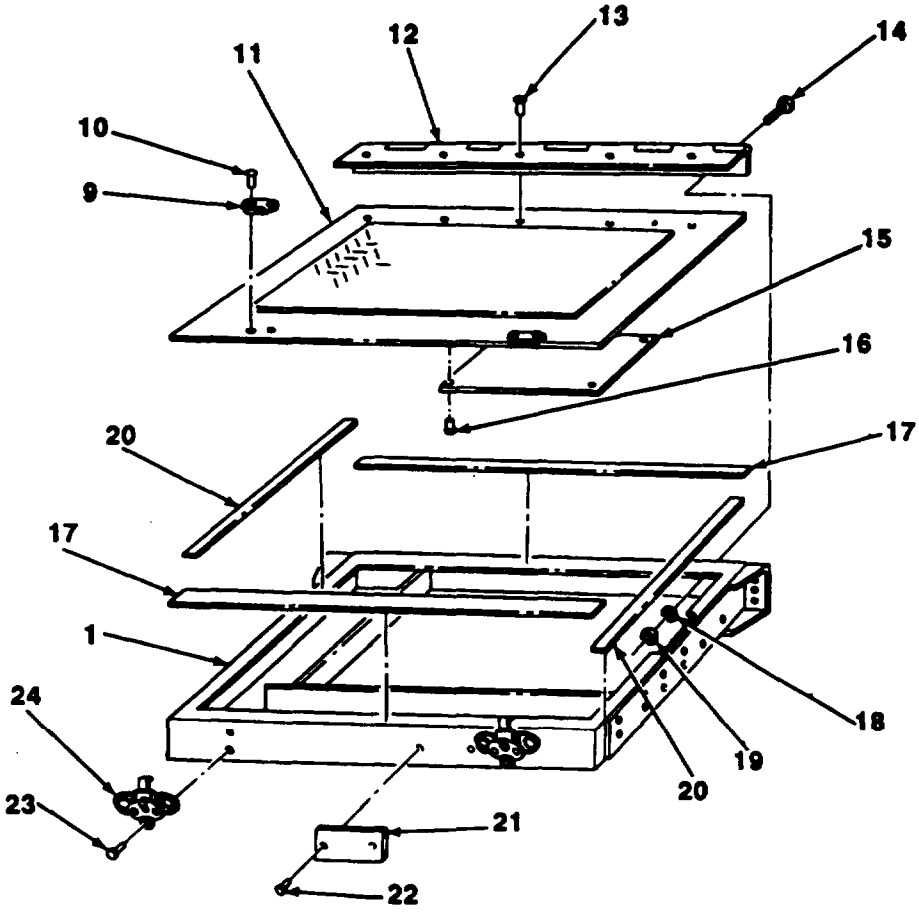

c. ASSEMBLY

1. Install data plate (21) to toolbox (1) with two new rivets (22).
2. Install two damping catches (24) with four new rivets (23).
3. Install two rubber strips (20) and two rubber strips (17) to toolbox (1) using adhesive.
4. Install two catches (9) to door (11) with four new rivets (10).
5. Install three data plates (15) with 12 new rivets (16).

4-51. TOOLBOX AND STEP PLATE MAINTENANCE (M840) (Con't).

6. Install hinge(12) to door (11) with five new rivets (13).

7. Install hinge (12) with door (11) to toolbox (1) with five bolts (14), new lockwashers (18), and nuts (19).

d. INSTALLATION

NOTE

Perform steps 1 and 2 to install step plate.

1. Position step plate (8) to rear dolly (2).

2. Install eight bolts (5), new lockwashers (6), and nuts (7).

3. Install toolbox (1) to fear dolly (2) with six washers (3) and bolts (4).

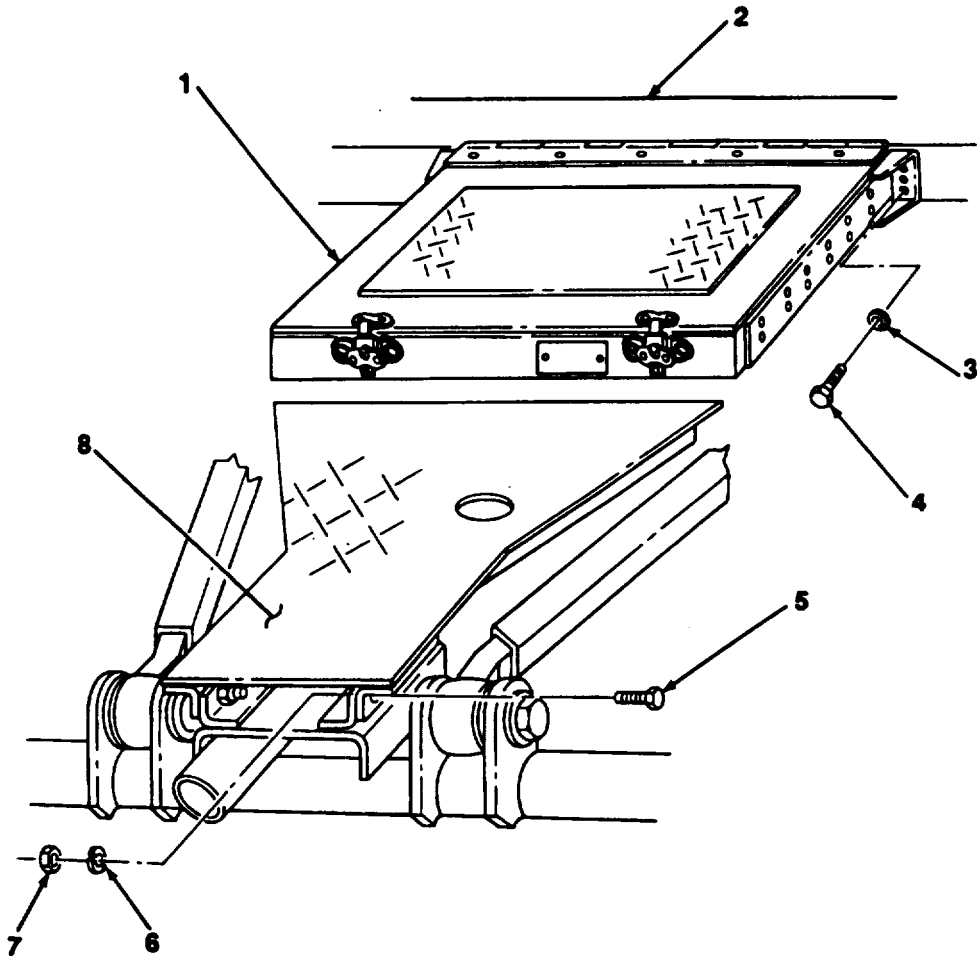

4-52. TOOLBOX AND PLATFORM MAINTENANCE (M832 EXCEPT SN J089-001 THRU 159 AND J017-160 THRU 350).

This Task Covers

a. Removal
b. Disassembly
c. Assembly
d. Installation

Initial Setup:

Materials/Parts:

- One cotter pin
- One gasket
- One spring pin
- Fifteen lockwashers

Tools/Test Equipment:

- General mechanc's tool kit

a. REMOVAL

1. Remove wire rope assembly (17) from pin (15) and remove pin from clevis (14).
2. Remove 15 screws (25) and lockwashers (24) and rwmovw toolbox (7) and platform (10) from dolly set. Discard lockwashers.
3. Remove screw (16) and wire rope assembly (17) from clevis (14).

b. DISASSEMBLY

1. Remove nine nuts (23) and screws (26) and remove toolbox cover (1) from platform (10).
2. Remove three nuts (5), screws (2), strike (4), and shim(3) from each side of toolbox cover (1).
3. Remove gasket (6) from toolbox (7). Discard gasket.
4. Remove cotter pin (18) from pin (19) and remove pin, two washers (20), and latch (11) from platform (10). Discard cotter pin.
5. Drive out spring pin (12) and remove link (13) from latch (11). Discard spring pin.
6. Remove six nuts (9), screws (8), guide (21), and latch assembly (22) from two places on platform (10).

c. ASSEMBLY

1. Install latch assembly (22) and guide (21) with six screws (8) and nuts (9) to two places on platform (10).
2. Position link (13) to latch (11) and press in new Spring pin (12).
3. Install latch (11) to platform (10) with pin (19) and two washers (20). Install new cotter pin (16).
4. Install new gasket (6) to toolbox (7).
5. Inatall shim (3) and strike (4) to each side of toolbox cover (1) with three screws (2) and nuts (5).
6. Inatall toolbox cover (1) to platform (10) with nine screws (26) and nuts (23).

4-52. TOOLBOX AND PLATFORM MAINTENANCE (M832 EXCEPT SN J089-001 THRU 159 AND J017-160 THRU 350) (Con't).

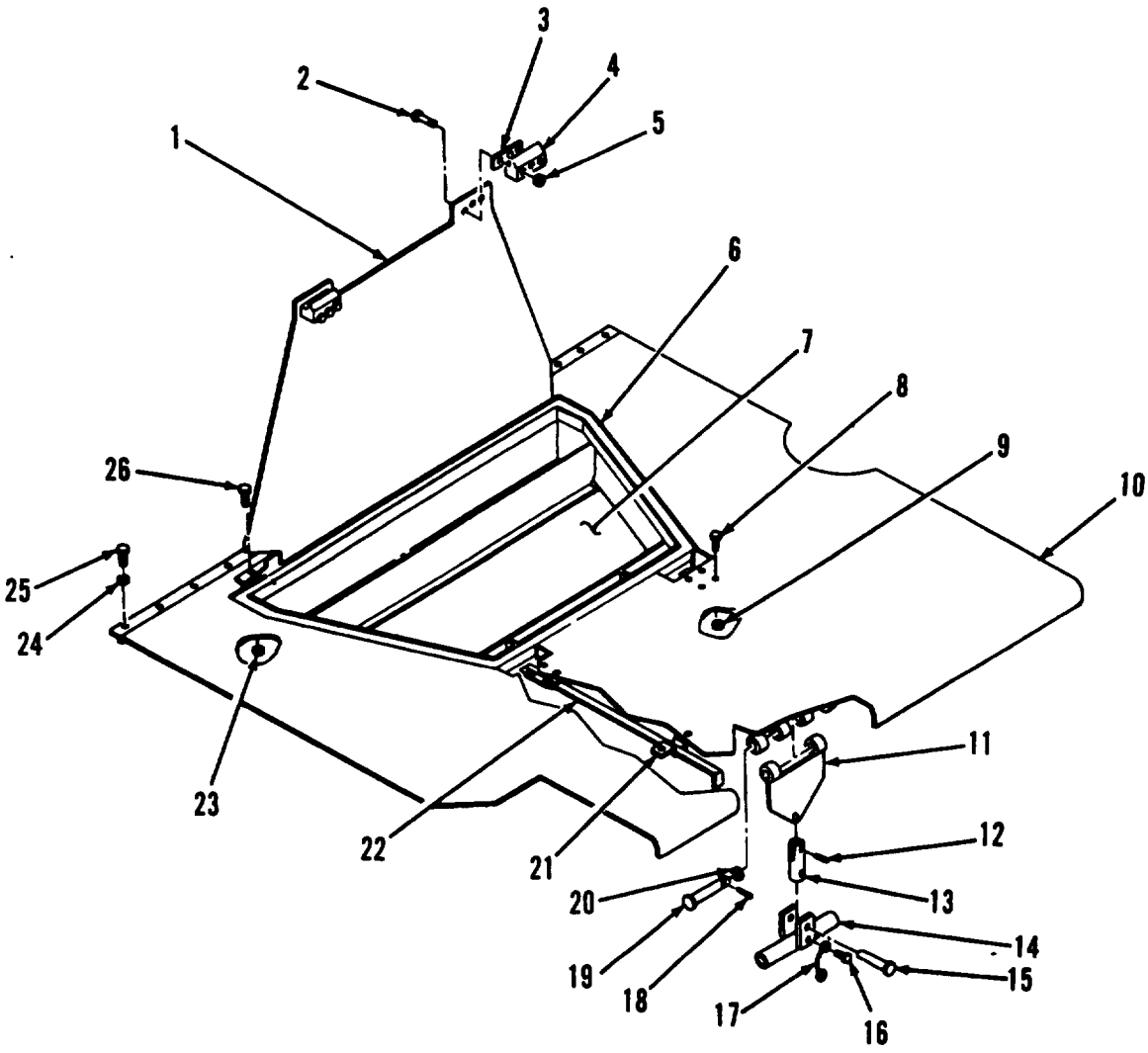

d. INSTALLATION

1. Install wire rope assembly (17) to clevis (14) with screw (16).
2. Install platform (10) and toolbox (7) to dolly sat with 15 new lockwashers (24) and straws (25).
3. Install pin (15) through clevis (14) and link (13) and install and of wire rope assembly (17) to pin.

4-53. TOOLBOX AND PLATFORM MAINTENANCE (M832 SN J089-001 THRU 159 AND J017-160 THRU 350 ONLY).

This** Task **Covers:

a. Removal
b. Disassembly
c. Assembly
d. Installation

Initial Setup:

Equipment Conditions:

- Dolly set parked on level surface with hand-brakes applied (para 2-2).
- Dolly set uncoupled from towing vehicle (para 2-16).

Tools/Test Equipment:

- General mechanic's tool kit
- Common no. 1 shop set

Materials/Parts:

- Adhesive (item 2, Appendix E)
- Dry cleaning solvent (item 14, Appendix E)
- One cotter pin
- Three fasteners
- Seventeen lockwashers
- One pad
- Twenty-four rivets
- One seal
- Twenty-three self-locking nuts
- One spring pin

NOTE

This task is for the M832 SN J089-001 thru 159 and J017-160 thru 350 only.

a. REMOVAL

1. Remove wire rope assembly (5) from quick-release pin (3). Remove quick-release pin (3) from clevis (1) and connector link (2).

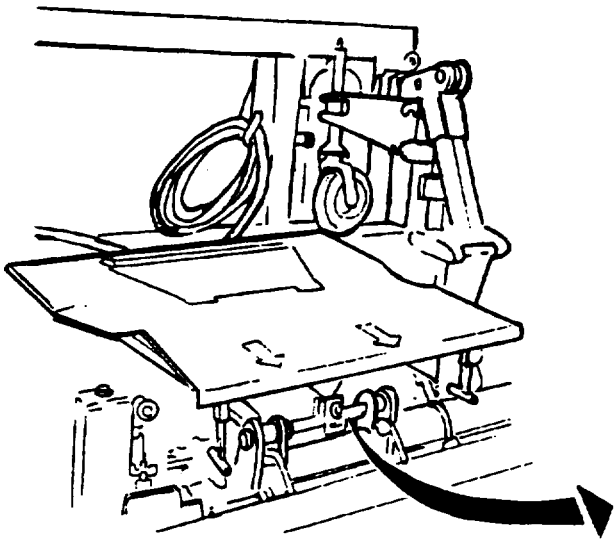

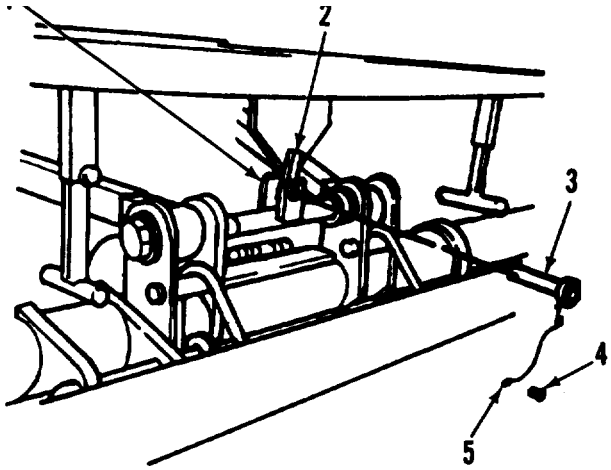

4-53. TOOLBOX AND PLATFORM MAINTENANCE (M832 SN J089-001 THRU 159 AND J017-160 THRU 350 ONLY) (Con't).

2. Remove 15 screws (14) and lockwashers (13) from hinge (10). Discard lockwashers.

3. Remove platform assembly (11) from dolly set and place on bench for further disassembly.

4. Remove screw (4) and wire rope assembly (5) from clevis (1).

b. DISASSEMBLY

1. Chisel heads off 15 rivets (15) and use a drive pin punch to remove rivets (15) from holes. Discard rivets.

2. Remove hinge (10) from platform assembly (11).

3. Remove nine screws (6) and self-locking nuts (12) from hinge (8), and remove cover assembly (9) from platform assembly (11). Discard self-locking nuts.

4. Chisel heads off nine rivets (7) and use a drive pin punch to remove rivets (7) from holes. Discard rivets.

5. Remove hinge (8) from cover assembly (9).

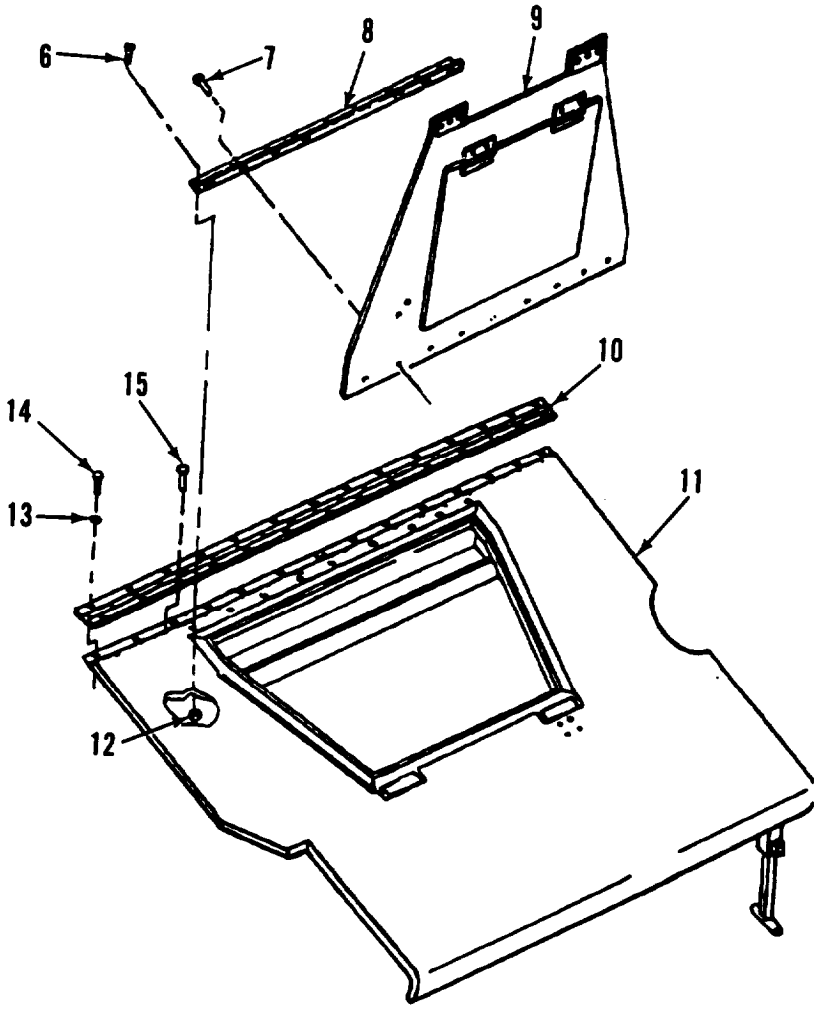

4-53. TOOLBOX AND PLATFORM MAINTENANCE (M832 SN J089-001 THRU 159 AND J017-160 THRU 350 ONLY) (Con't).

6. Remove six screws (18) and nuts (21), two catch strikes (20), and four shims (19) from cover assembly (9).

WARNING

Dry cleaning solvent, P-D-880, is toxic and flammable. Always wear protective goggles and gloves, and use only in a well-ventilatad area. Avoid contact with skin, eyes, and clothes, and DO NOT breathe vapors. DO NOT use near open flame or excesssive heat. The solvent's flash point is 100°F-138°F (38°-59°C). If you become dizzy while using drycleaning solvent, Immediately get fresh air and medical help. If solvent contacts your eyes, immediately wash them and get medical aid.

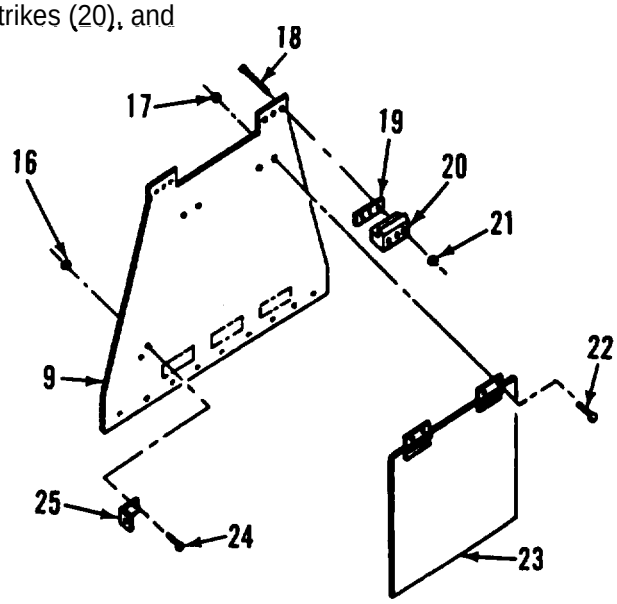

7. Remove two screws (24) and self-locking nuts (16) and eye bracket (25) from cover assembly (9). Discard self-locking nuts.

8. Remove four nuts (17) and screws (22) and cover (23) from cover assembly (9).

9. Remove seal (43) from groove in platform assembly (11). Use dry cleaning solvent to remove any residue. Discard seal.

10. Remove toolbox prop (26) from two eyebolts (27).

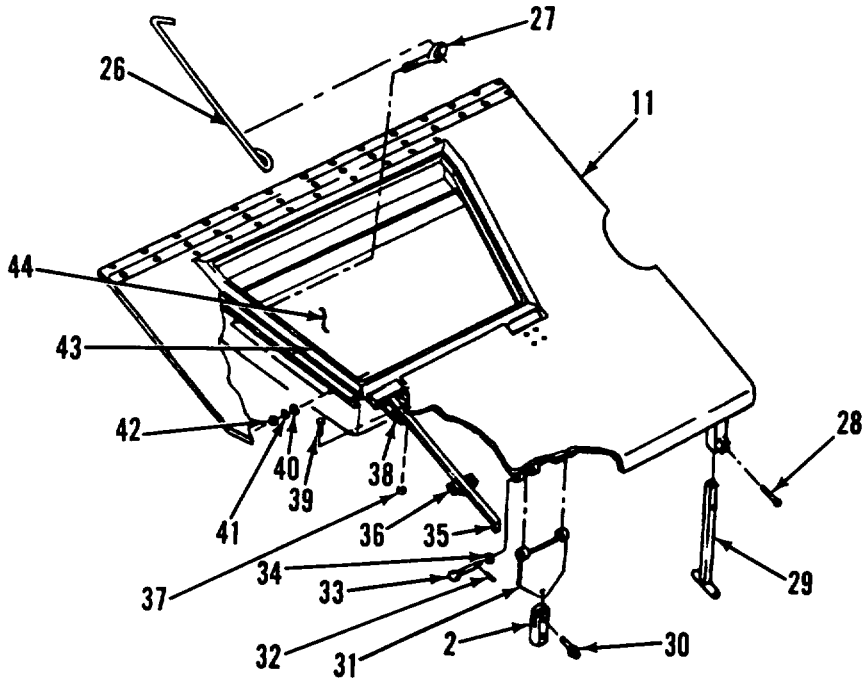

4-53. TOOLBOX AND PLATFORM MAINTENANCE (M832 SN J089-001 THRU 159 AND J017-160 THRU 350 ONLY) (Con't).

11. Remove two nuts (42), lockwashers (41), washers (40), and eyebolts (27) from storage box (44). Discard lockwashers.

12. Scrape pad or fasteners from cover (23).

WARNING

Dry cleaning solvent, P-D-680, is toxic and flammable. Always wear protective goggles and gloves, and use only in a well-ventilated area. Avoid contact with skin, eyes, and clothes, and DO NOT breathe vapors. DO NOT use near open llama or excessive heat. The solvent's flashpoint is 100°F-1380F (38°C-59°C). If you become dizzy while using dry cleaning solvent, immediately get fresh air and medical help. If solvent contacts your eyes, Immediately wash them and get medical aid.

13. Remove any residue from rover (23) with dry cleaning solvent.

14. Remove two screws (28) from two leg assemblies (29) and remove leg assemblies (29) from platform assembly (11).

15. Remove 12 screws (39), two guides (36) and guides (38), 12 self-looking nuts (37), and two latch sets (35) from platform assembly (11).

16. Remove cotter pin (32) from pin (33), and remove pin (33) and two washers (34) from hinge leaf (31). Discard cotter pin.

17. Remove hinge leaf (31) from platform assembly (11).

18. Remove spring pin (30) from connector link (2), and remove connector link (2) from hinge leaf (31). Discard spring pin.

c. ASSEMBLY

1. Install connector link (2) on hinge leaf (31) and install new spring pin (30) in connector link (2).

2. Install hinge leaf (31) on platform assembly (11) with pin (33) and two washers (34), and secure pin (33) with new cotter pin (32).

3. Install two guides (36), guides (38), and latch sets (35) and 12 screws (39) and self-locking nuts (37) on platform assembly (11).

4. Install two leg assemblies (29) and screws (28) on platform assembly (11).

WARNING

Adhesive causes immediate bonding on contact with eyes, skin, or clothing and also gives off harmful vapors. Wear protective goggles, and use adhesive in a well-ventilated area. If adhesive gets in your eyes, try to keep them open, flush them with water for 15 minutes, and get medical attention. Adhesives and sealing compounds can burn easily and can give off harmful vapors. To avoid injury, keep adhesives and sealing compounds away from open fire and use them In a well-ventilated area.

4-53. TOOLBOX AND PLATFORM MAINTENANCE (M832 SN J089-001 THRU 159 AND J017-160 THRU 350 ONLY) (Con't).

NOTE

Be sure surface of cover is free of burrs and sharp edges before applying new pad or fasteners.

5. Install pad on cover (23) fasteners. Pad requires adhesive. Fasteners have peel-off backing.

6. Install two nuts (42), new lockwashers (41), washers (40), and eyebolts (27) on storage box (44).

7. Install toolbox prop (26) on two eyebolts (27).

8. Install four screws (22) and nuts (17) and cover (23) on cover assembly (9).

9. Install two screws (24) and new self-locking nuts (16) and eye bracket (25) on cover assembly (9).

WARNING

Adhesive causes Immediate bonding on contact with eyes, skin, or clothing and also gives off harmful vapors. Wear protective goggles, and use adhesive in a well-ventilated area. If adhesive gets in your eyes, try to keep them open, flush them with water for 15 minutes, and get medical attention. Adhesives and sealing compounds can bum easily and can give off harmful vapors. To avoid injury, keep adhesives and sealing compounds away from open fire and use them in a well-ventilated area.

10. Apply adhesive to groove in platform assembly (11), and install new seal (43) on platform assembly (11).

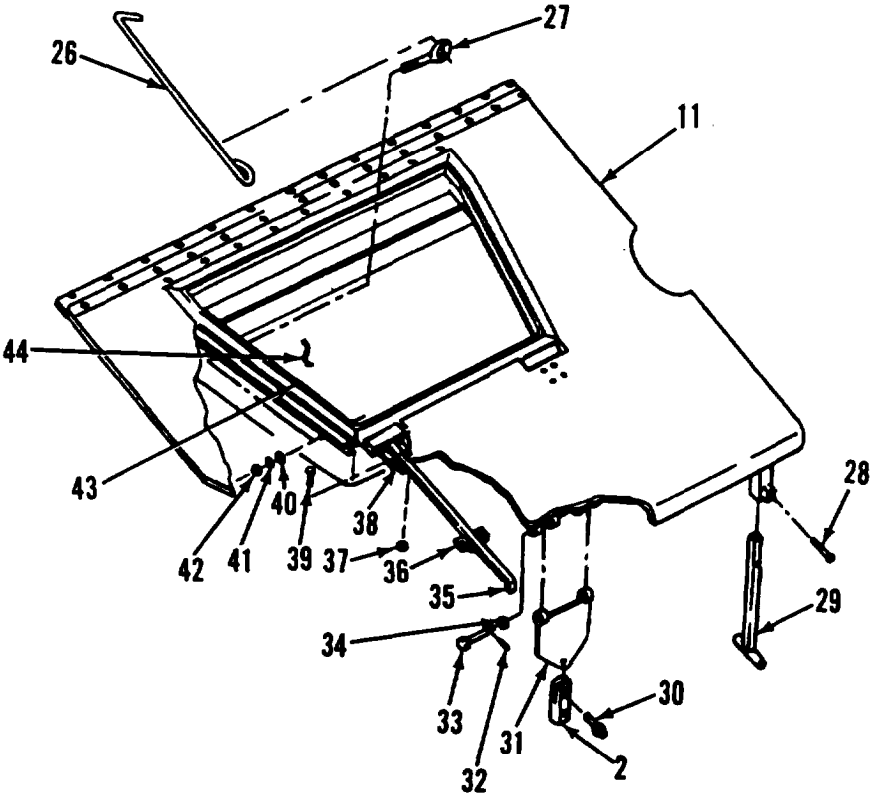

4-53. TOOLBOX AND PLATFORM MAINTENANCE (M832 SN J089-001 THRU 159 AND J017-160 THRU 350 ONLY) (Con't).

11. Install six screws (18) and nuts (21), two catch strikes (20), and four shims (19) on cover assembly (9).

12. Install hinge (8) on cover assembly (9) with nine new rivets (7).

13. Install nine screws (6) and new self-locking nuts (12) and cover assembly (9) on platform assembly (11).

14. Install hinge (10) on platform essembly (11) with 15 new rivets (15).

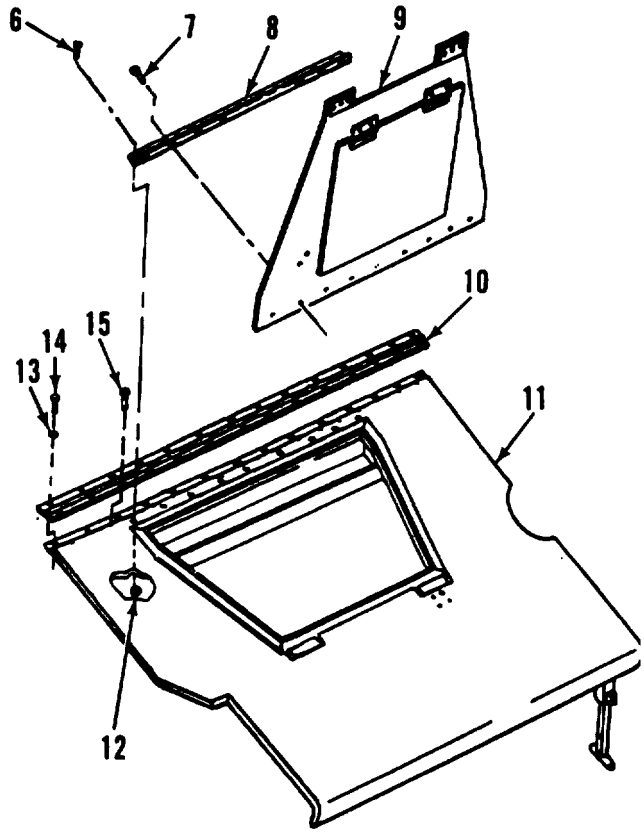

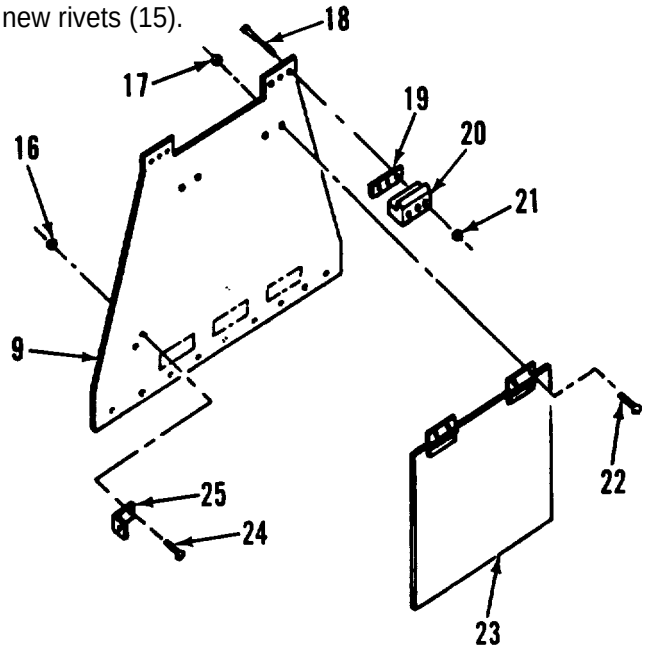

d. INSTALLATION

1. Install screw (4) and wire rope assembly (5) on clevis (1).

2. Position platform assembly (11) on dolly set and install 15 screws (14) and new lockwashers (13) through hinge (10).

3. Install connector link (2) in clevis (1) and secure with quick-release pin (3). Install wire rope assembly (5) on quick-release pin (3).

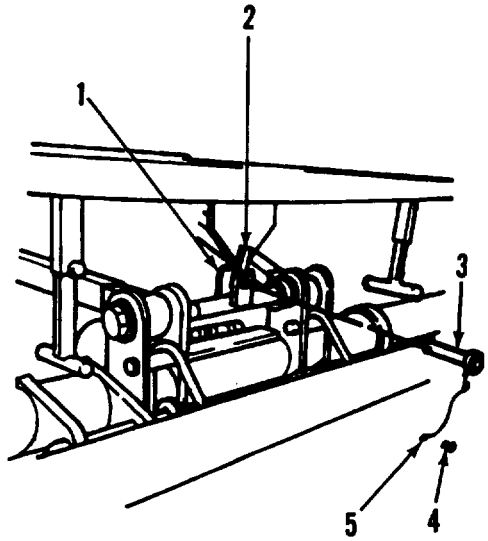

4-54. DRAWBAR ASSEMBLY MAINTENANCE.

This Task Covers:

a. Removal
b. Disassembly
c. Assembly
d. installation

Initial Setup:

Equipment Conditions:

- Safety chains and air hoses removed from drawbar.

Tools/Test Equipment:

- General mechanic's tool kit
- Common no. 1 shop set

Materials/Parts.

- Grease (Item 7, Appendix E)
- One cotter pin
- Twenty-four lockwashers (except M832 SN J089-001 thru 159 and J017-180 thru 350)
- Twenty-six lockwashers (M832 SN J089-001 thru 159 and J017-180 thru 350 only)

a. REMOVAL

WARNING

Drawbar is heavy. Two persons are needed to remove drawbar from dolly. Improper removal can cause serious injury.

1. Remove quick-release pin (19) from drawbar (20) and lower drawbar (20) to ground.

2. Remove safety pin from drawbar pin assembly (18), and remove drawbar pin assembly (18) and drawbar (20) from front of dolly set (1).

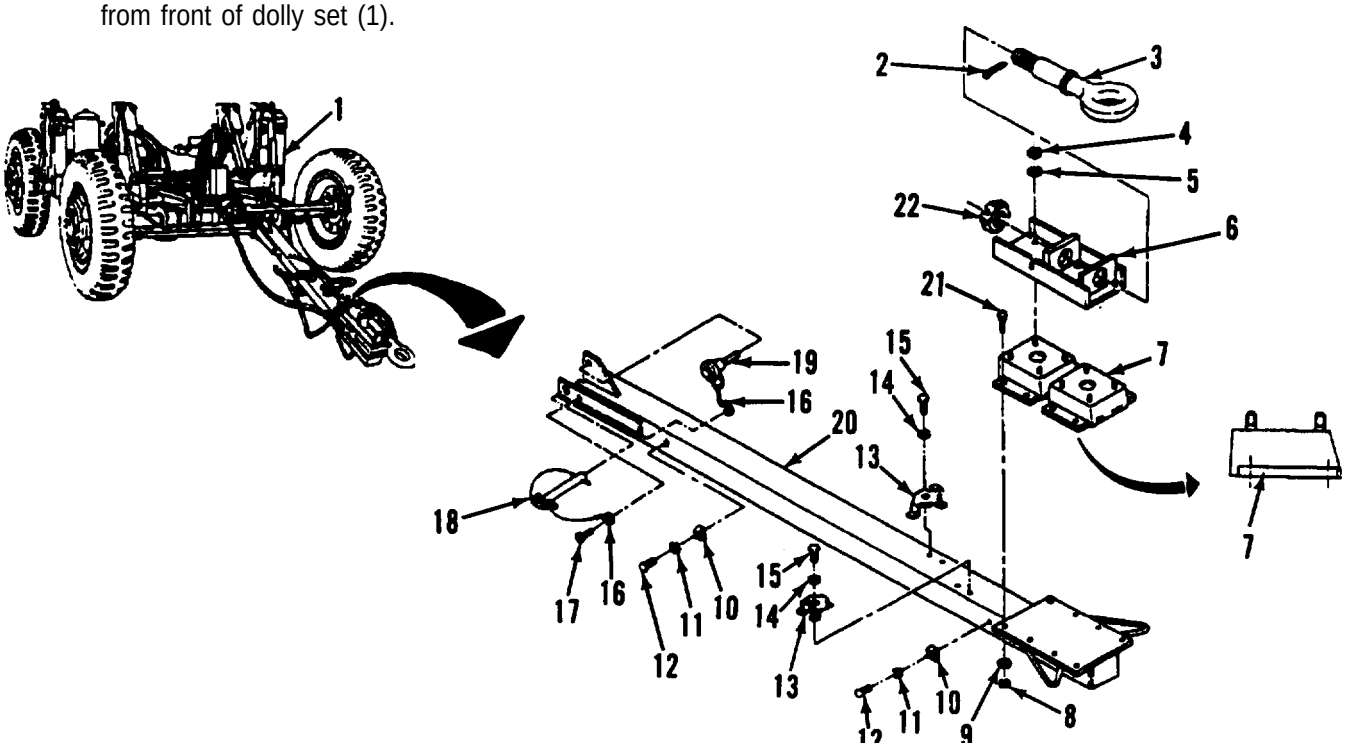

M689, M840, and M832 (Except SN JO89-001 thru 159 and J017-160 thru 350)

4-54. DRAWBAR ASSEMBLY MAINTENANCE (Con't).

b. DISASSEMBLY

WARNING

Care should be taken when raising drawbar. Service broke air hose may become pinched or crushed, resulting in loss of braking and personnel injury and/ordamage to vehicle.

1. Remove screw (17) and two lanyards (16) from drawbar (20).
2. Remove lanyard (16) from quick-release pin (19).
3. Remove four screws (12), lockwashers (11), and clips (10) from drawbar (20). Discard lockwashers.
4. Remove four bolts (15) and lockwashers (14) and two dummy couplings (13) from drawbar (20). Discard lockwashers.
5. Remove cotter pin (2), slotted nut (22), drewbar coupler (3), and drawbar adapter (6 or 26) from drawbar (20). Discard cotter pin.

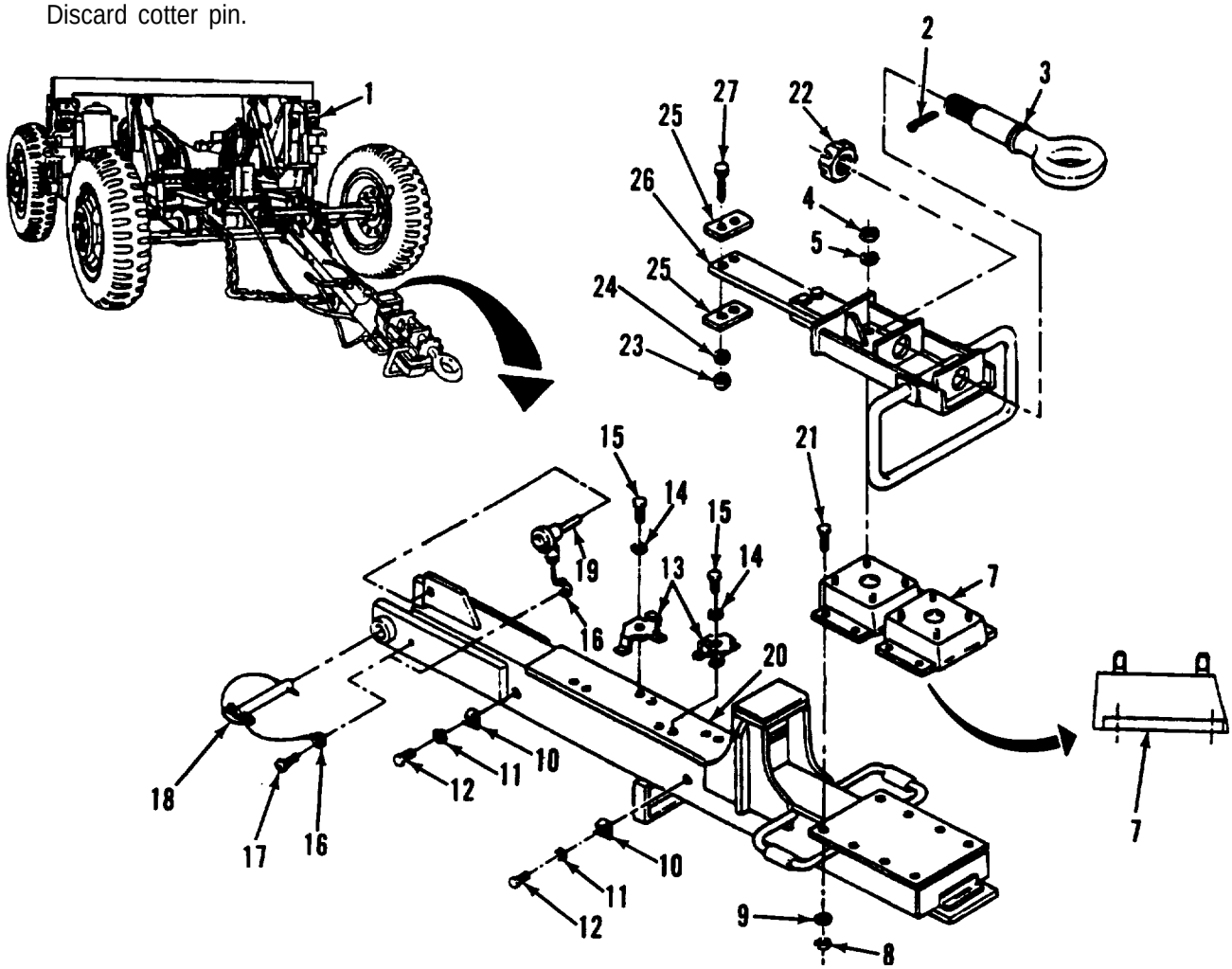

M832 (SN J089-001 thru 159 and J017-160 thru 350 Only)

4-54. DRAWBAR ASSEMBLY MAINTENANCE (Con't).

6. Remove eight nuts (8), lockwashers (9), and screws (21) from two rubber mounts (7) on drawbar (20). Discard lockwashers.

NOTE

For the MS32 (SN J089-001 thru 159 and J017-160 thru 350), drawbar and coupler iInclude stops. Perform stop 7 for the M832 (SN J089001 thru 159 and J017-160 thru 350).

7. Remove two nuts (23), screws (27), stops (25), and lockwashers (24) from drawbar adapter (26). Discard lockwashers.

8. Remove drawbar adapter (6 or 26) and two rubber mounts (7) from drawbar (20).

9. Remove eight nuts (4) and lockwashers (5) from drawbar adapter (6 or 26), and remove two rubber mounts (7) from drawbar adapter (6 or 26). Discard lockwashers.

c. ASSEMBLY

NOTE

The front of rubber mount has a slight vertical slope. An arrow is located in center hole of each mount, which indicates the sloped side. Position each rubber mount with sloped side facing the front of the drawbar.

1. Install two rubber mounts (7) on drawbar adapter (6 or 26) with eight nuts (4) and new lockwashers (5). Torque nuts to 55 lb.-ft. (75 N•m).

2. Install two rubber mounts (7) and drawbar adapter (6 or 26) on drawbar (20) with eight screws (21), nuts (8), and new iockwashers (9). Torque nuts to 85 lb.-ft. (115 N•m).

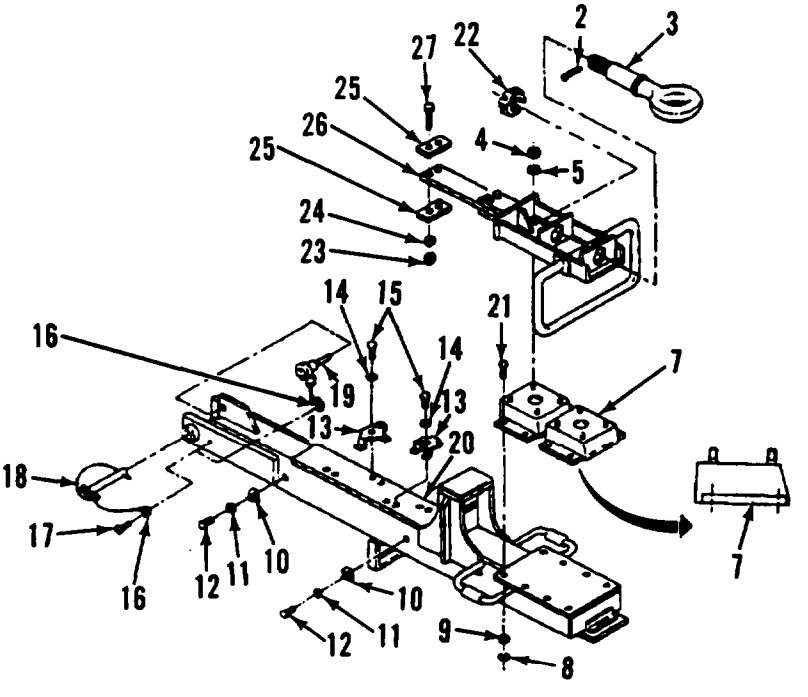

M832 (SN J089-001 thru 159 and J017-160 thru 350 Only)

4-54. DRAWBAR ASSEMBLY MAINTENANCE (Con't).

NOTE

Porform step 3 only for the M632 (SN J089-001 thru 159 and J017-160 thru 350).

3. Install two screws (27) and stops (25) on end of drawbar adapter (26) with two nuts (23) and new lockwashers (24).

NOTE

Cotter pin must be installed in drawbar coupler through a side hole. Use notch in adapter as a guide for proper placement of cotter pin.

4. Install drawbar coupler (3) on drawbar adapter (6 or 26) with slotted nut (22). Torque nut between 300 and 325 lb.-ft. (406 and 440 N•m). Tighten nut to nearest hole and install new cotter pin (2).

5. Install two dummy couplings (13) on drawbar (20) with four new lockwashers (14) and bolts (15).

6. Install four clips (10) on drawbar (20) with four new lockwashers (11) and screws (12).

7. Install lanyard (16) on quick-release pin (19) and drawbar pin assembly (18).

8. Install two lanyards (16) on drawbar (20) with screw (17).

d. INSTALLATION

1. Apply grease to drawbar pin assembly (18). Position drawbar (20) on front of dolly set (1) and install drawbar pin assembly (18). Secure safety pin in drawbar pin assembly (18).

2. Raise drawbar (20) and install quick-release pin (19) on drawbar (20).

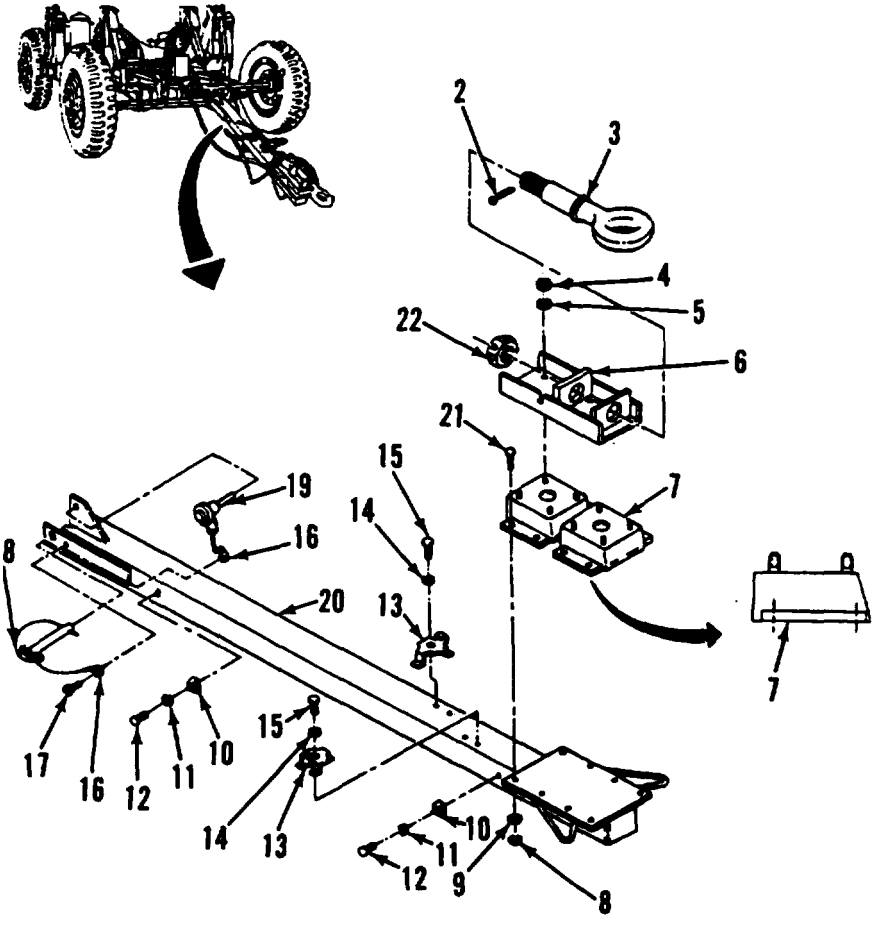

M689, M840, and M832
(Except SN J089-001 thru 159 and J017-160 thru 350)

FOLLOW-ON TASKS:

Install safety chains and air hoses on drawbar.

4-55. POSITIONING LEVER REPAIR (M840 AND M832 EXCEPT SNJ089-001 THRU 159 AND J017-160 THRU 350).

This Task Covers:

a. Disssembly

b. Assembly

Initial Setup:

Equipment Conditions:

- Positioning lever removed from rear dolly.

Tools/Test Equipment

- General mechanic's tool **kit**

a. DISASSEMBLY

NOTE

- Perform steps 1 and 2 for M840 positioning lever.
- Perform step 3 for M832 positioning lever.

1. Remove pin assembly (3) from positioning lever (1).
2. Remove two sleeves (2).

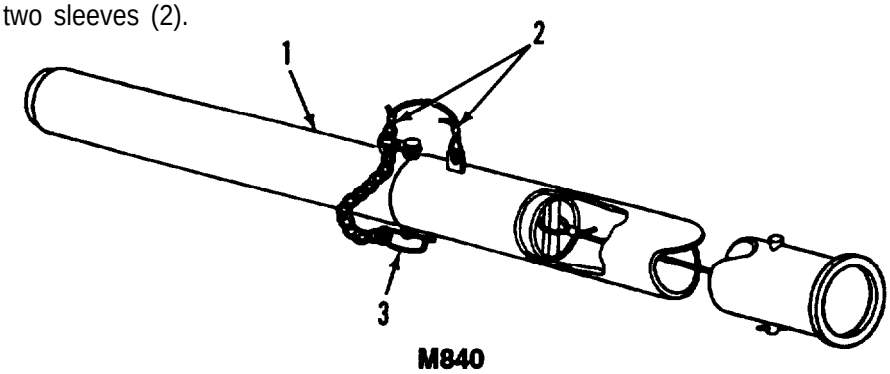

3. Remove setscrew (5) from positioning lever (4).

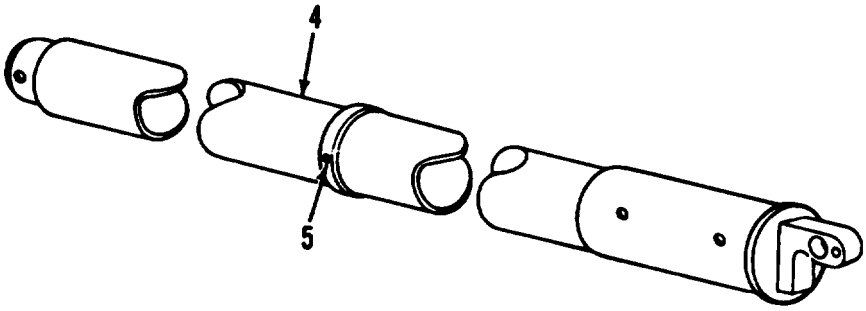

M832 (Except SN J089-001 thru 159 and J017-160 thru 350)

4-55. POSITIONING LEVER REPAIR (M840 AND M832 EXCEPT SN J089-001 THRU 159 AND J017-160 THRU 350) (Con't).

b. ASSEMBLY

1. Install setscrew (5) on positioning lever (4).
2. Install two sleeves (2).
3. install pin assembly (3) on positioning lever (1).

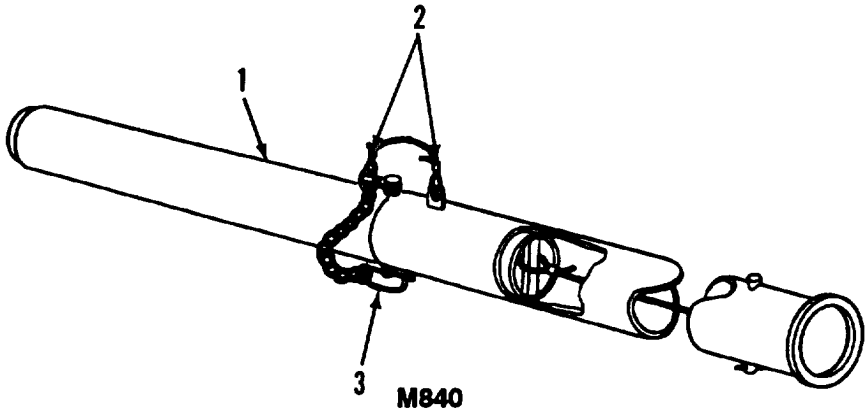

M840

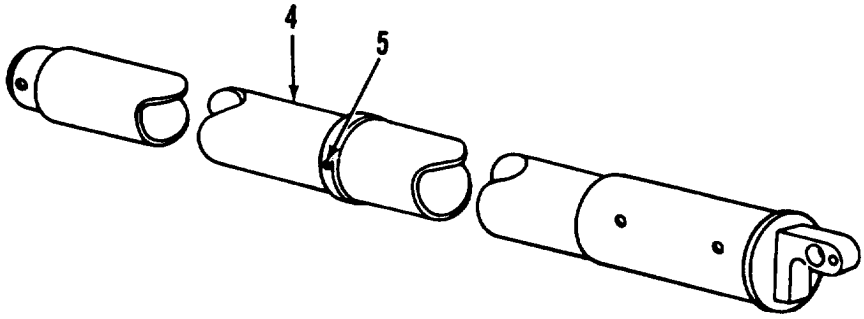

M832

FOLLOW-ON TASKS:

- Install positioning lever on rear dolly.

4-56. LIFTING-LEVEUNG JACK REPLACEMENT (M689).

This Task Covers:

a. Removal

b. Installation

Initial Setup:

Materials/Parts:
- Two cotter pins
- Four lockwashers

Tools/Test Equipment:
- General mechanic's tool kit

a. REMOVAL

1. Remove two cotter pins (7) and washers (5) from pin (6) at lower end of lifting-leveling jack (1). Discard rotter pins.
2. Remove pin (6).
3. Remove four screws (4), lockwashers (3), and two retainers (2). Discard lockwashers.
4. Remove lifting-leveling jack (1) from dolly.

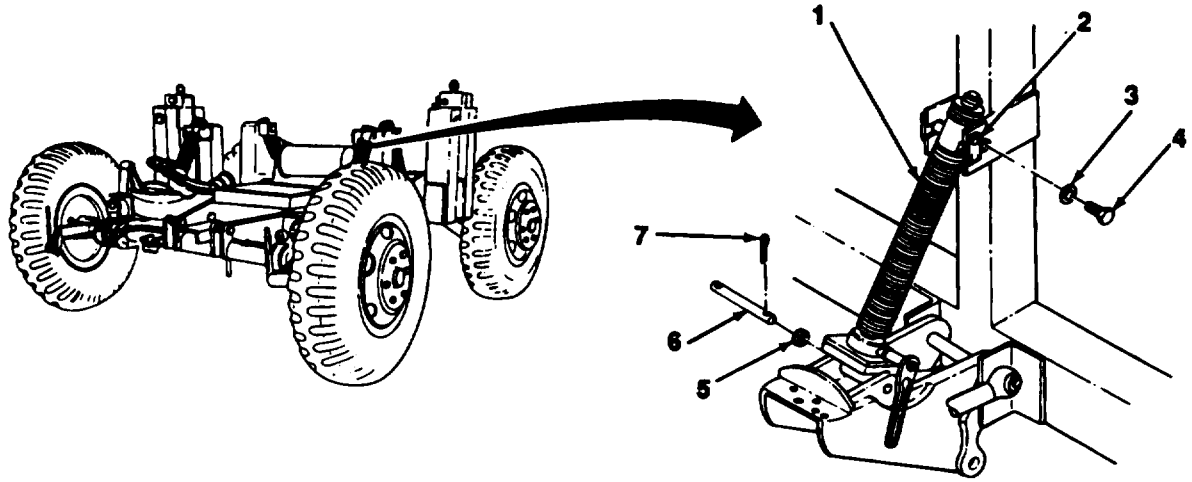

b. INSTALLATION

1. Install lifting-leveling Jack (1) and two retainers (2) to dolly with four new lockwashers (3) and screws (4).

NOTE

Adjust length of lifting-leveling jack, if necesary, for ease in installing pin.

2. Install pin (6) to secure lower end of lifting-leveling jack (1).
3. Install two washers (5) and new cotter pins (7) in pin (6) at lower end of lifting-levellng jack (1).

4-57. LIFTING-LEVEUNG JACK REPAIR (M689).

This Task Covers:

a. Disassembly

b. Assembly

Initial Setup:

Equipment Conditions:

- Lifting-leveling jack removed (para 4-56).

Tools/Test Equipment:

- General mechanic's tool kit
- Common no. 1 shop set

Materials/Parts:

- Three spring pins
- Five lockwashers

a. DISASSEMBLY

1. Remove screw (12), washer (13), and lockwasher (14) from ratchet wrench (11) and remove wrench from extension (15). Discard lockwasher.
2. Remove spring pin (16) from extension (15). Discard spring pin.
3. Remove four screws (8), lockwashers (7), and cap (6) from gear housing (3). Discard lockwashers.
4. Remove two screws (10) and data plate (9) from cap (8).

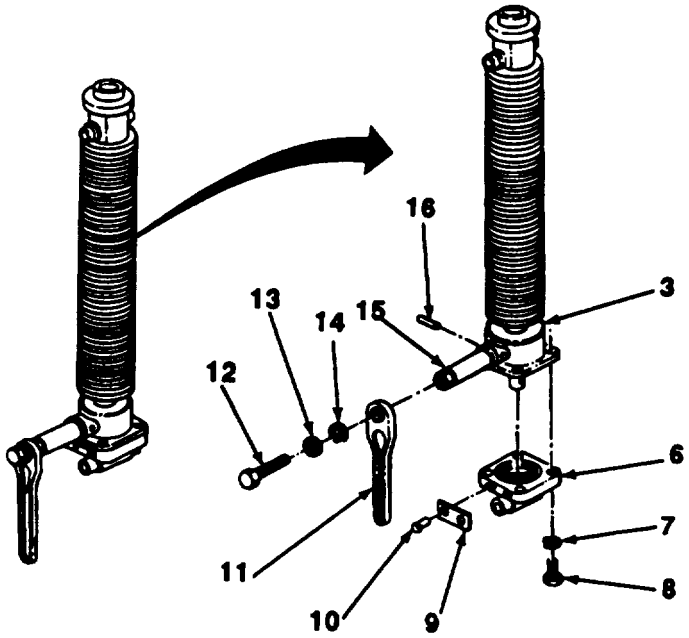

4-57. LIFTING-LEVELING JACK REPAIR (M689) (Con't).

5. Remove spring pin (2) from collar (1). Discard spring pin.

6. Remove spring pin (5) from bevel gear (4). Discard spring pin.

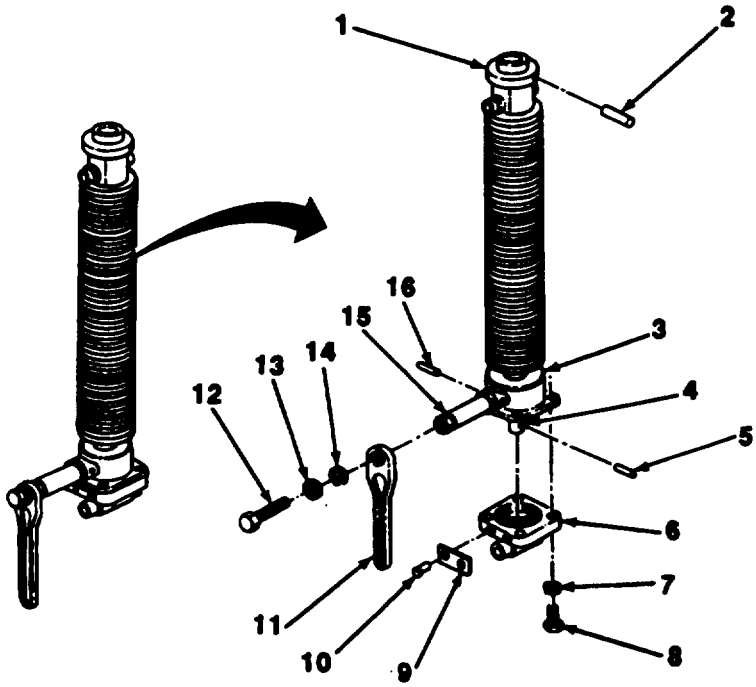

b. ASSEMBLY

1. Install new spring pin (5) to bevel gear (4).

2. Install new spring pin (2) to collaf (1).

3. **Install data plate (9) to cap (6) with two screws (10).**

4. **Install cap (6) to gear housing (3) with four new lockwashers (7) and screws (8).**

5. Install new spring pin (16) to extension (15).

6, Install ratchet wrench (11) to extension (15) and Install new lockwasher (14), washer (13), and screw (12).

FOLLOW-ON TASKS:

- Install lifting-leveling jack (para 4-56).

4-58. STRUT MAINTENANCE (M832).

This Task Covers:

a. Removal
b. Disassembly
c. Assembly
d. Installation

Initial Setup:

Materials/Parts:

- One locknut
- Five cotter pins

Tools/Test Equipment:

- General mechanic's tool kit

a. REMOVAL

1. Loosen clamp assembly (13).
2. Remove two cotter pins (9) and washers (11) from pin (10). Discard cotter pins.
3. Ramove pin (10) from lower end of strut (12).
4. Remove two cotter pins (4) and washers (3) from pin (5). Discard cotter pins.
5. Remove pin (5) and remove strut (12) assembly from dolly.

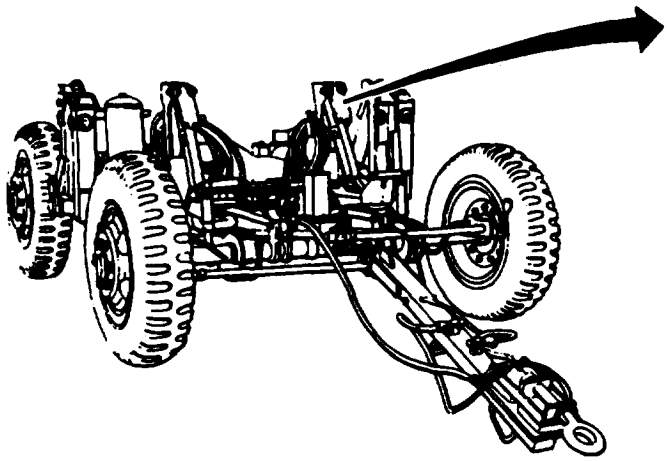

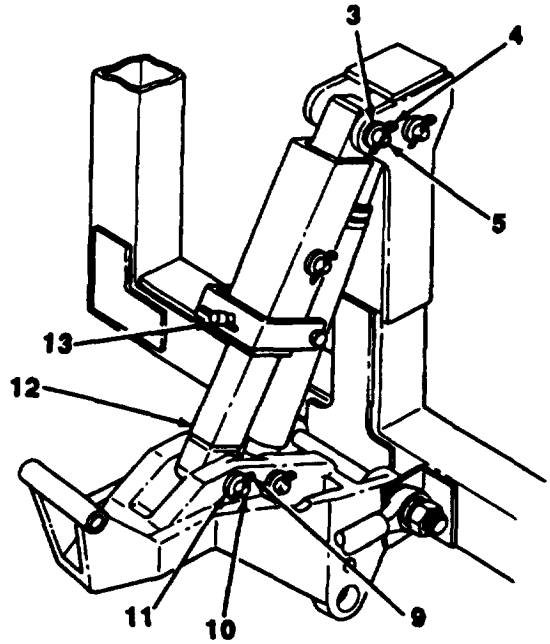

4-58. STRUT MAINTENANCE (M832) (Con't).

b. DISASSEMBLY

1. Remove locknut (14) and screw (8) and remove clamp assembly (13) from strut (12). Dim locknut
2. Remove cotter pin (8), washer (1), and pin (7) from tube (2) and remove tube from strut (12). Discard cotter pin.

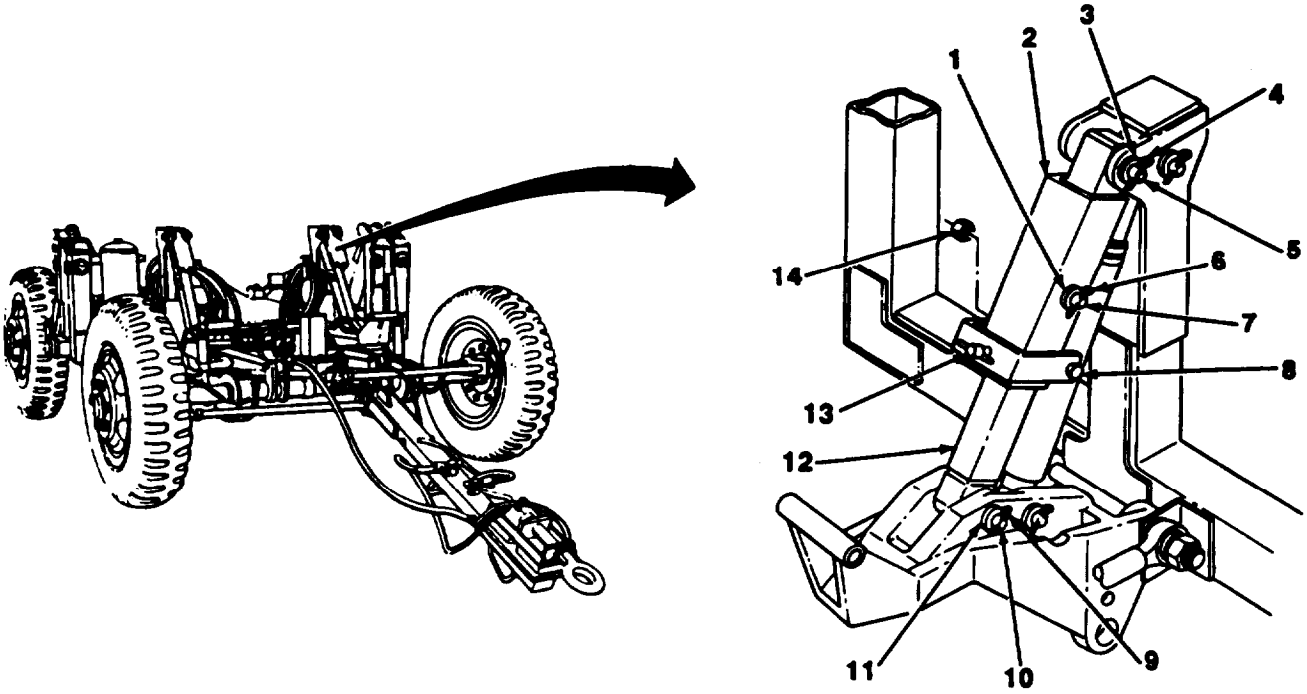

c. ASSEMBLY

1. Install tube (2) to strut (12) with pin (7), washer (1), and new cotter pin (6).
2. Install clamp assembly (13) to strut (12) with screw (8) and new locknut (14).

d. INSTALLATION

1. Position strut (12) assembly to dolly and install pin (5).
2. Install two washers (3) and new cotter pins (4) to pin (5).
3. Install pin (10) to lower end of strut (12).
4. Install two washers (11) and new cotter pins (9) to pin (10).
5. Tighten clamp assembly (13).

4-59. STRUT MAINTENANCE (M840).

This Task Covers

a. Removal
b. Disassembly
c. Assembly
d. Installation

Initial Setup:

Material/Parts

l One cotter pin
l Onekxknut
l 0ne spring pin

Tools/Test Equipment

. General mechanic's tool kit

a. REMOVAL

1. Loosen clamp assembly (11).
2. Remove cotter pin (7), washer (8), and pin (9) from lower end of strut (10). Discard cotter pin.
3. Rernove lockpin (3), quick-release pin (4), and strut (10) assembly from dolly.

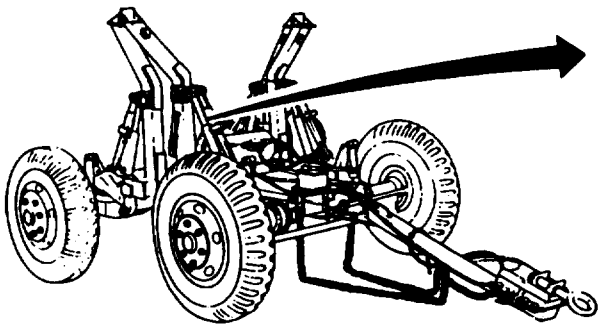

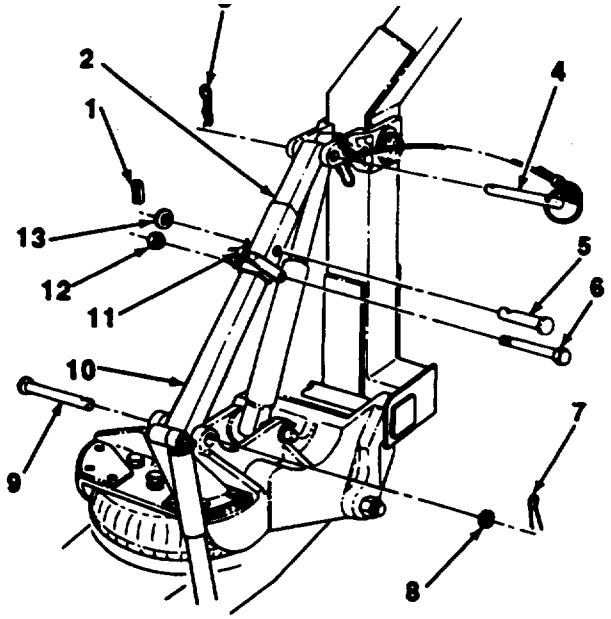

b. DISASSEMBLY

1. Rernove locknut (12) and screw (6) and remove clamp assembly (11) from strut (10). Discard locknut.
2. Remove spring pin (l), washer (13) and pin (5) from tube (2) and remove tube from strut (10). Discard spring pin.

4-59. STRUT MAINTENANCE (M840) (Con't).

c. ASSEMBLY

1. Install tube (2) to strut (10) with pin (5), washer (13), and new spring pin (1).
2. **Install clamp assembly (11) to strut (10) with screw (6) and new locknut (12).**

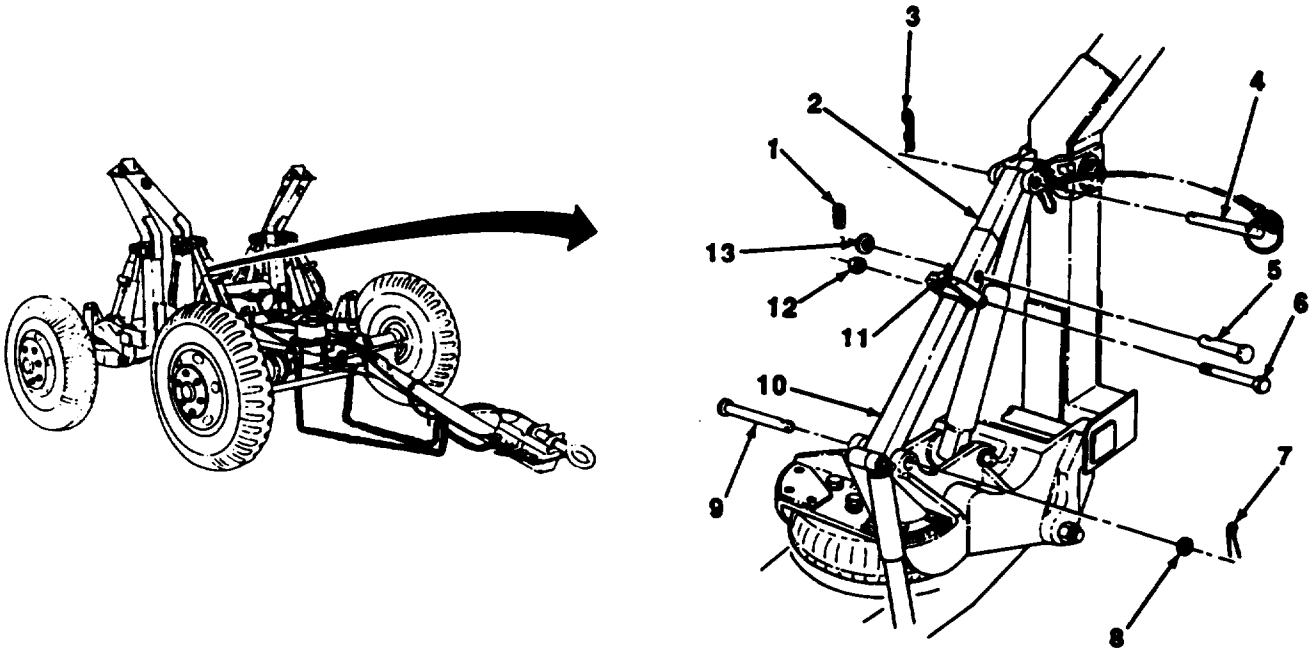

d. INSTALLATION

1. Position strut (10) assembly to dolly and install quick-release pin (4) and lockpin (3).
2. Install lower and of strut (10) with pin (9), washer (8), and new cotter pin (7).
3. Tighten clamp assembly (11).

Section XII. SPRINGS AND SHOCK ABSORBERS MAINTENANCE

Paragraph Title	Page Number
Air Spring Replacement	4-155
Alining Rod Replacement	4-174
Caster Assembly Repair (M832 SN J089-001 thru 159 and JO17-160 thru 350 Only)	4-188
Front Axle Yoke and Mounting Bracket Maintenance (M832 SN J069-001 thru 159 and JO17-160 thru 350 Only)	4-185
Front Stabilizer Bar Replacement (M832)	4-179
Front Suspension Bar Maintenance (M832 SN J089-001 thru 159 and J017-160 thru 350 Only)	4-167
Rear Axle Yoke and Mounting Bracket Maintenance (M632 SN J089-001 thru 159 and J017-160 thru 350 Only)	4-181
Rear Stabilizer Bar Replacement (M832)	4-177
Rear Suspension Bar Maintenance (M832 SN J089-001 thru 159 and J017-160 thru 350 Only)	4-161
Shock Absorber and Mounting Bracket Replacement	4-157
Steering Stop Adjustment (M832 SN J089-001 thru 159 and J017-160 thru 350 Only)	4-190
Suspension Bar Maintenance (Except M832 SN J089-001 thru 159 and J017-160 thm 350)	4-159

4-60. AIR SPRING REPLACEMENT.

This Task Covers:

a. Removal

b. Installation

Initial Setup:

Equipment Conditions:

- Front and rear dollies uncoupled (pare 2-11).
- Air pressure released from air spring.

Materials/Parts:

- Antiseizing tape (Item 17, Appendix E)
- Two lockwashers

Tools/Test Equipment

- General mechanic's tool kit
- Common no. 1 shop set

a. REMOVAL

1. Remove valve cap (3) from valve stem (2).
2. Remove valve stem (2) from top of air spring (1).
3. Raise bracket (4), as necessary, to provide clearance for air spring (1).

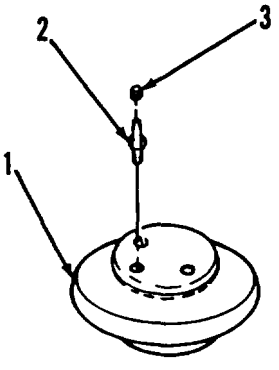

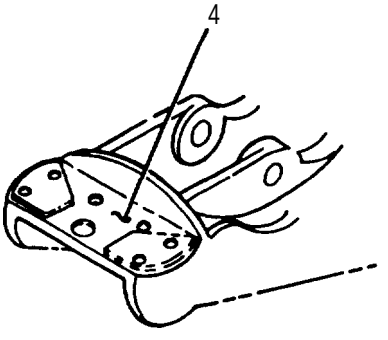

4-60. AIR SPRING REPLACEMENT (Con't)

4. Remove **two** screws (6) and lockwashers (5) from bracket (4). Discard lockwashers.

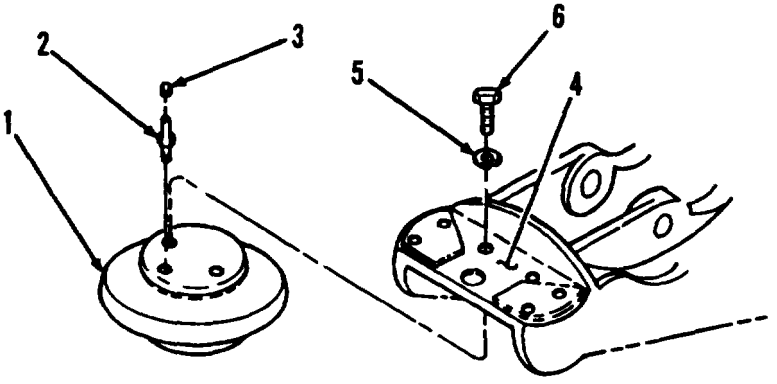

b.

4-61. SHOCK ABSORBER AND MOUNTING BRACKET REPLACEMENT.

This Task Covers:

a. Removal

b. Installation

Initial Setup:

Tools/Test Equipment:

- General mechanic's tool kit

Materials/Parts:

- Seven lockwashers

a. REMOVAL

1. Remove nut (12), lockwasher (11), and washer (10) from upper stud (8) or bolt (16). Discard lockwssher.

2. Remove nut (12), lockwasher (11), and washer (10) from lower stud (14). Discard lockwasher.

3. Remove shook absorber (13), sleeve (9), four robber bushings (7), and two washers (6) from upper and lower studs (8 and 14) or bolts (16).

NOTE

Perform steps 4 through 6 only if mounting bracket is damaged.

4. Remove nut (1), lockwasher (2), and lower stud (14) from bracket (15). Discard lockwasher.

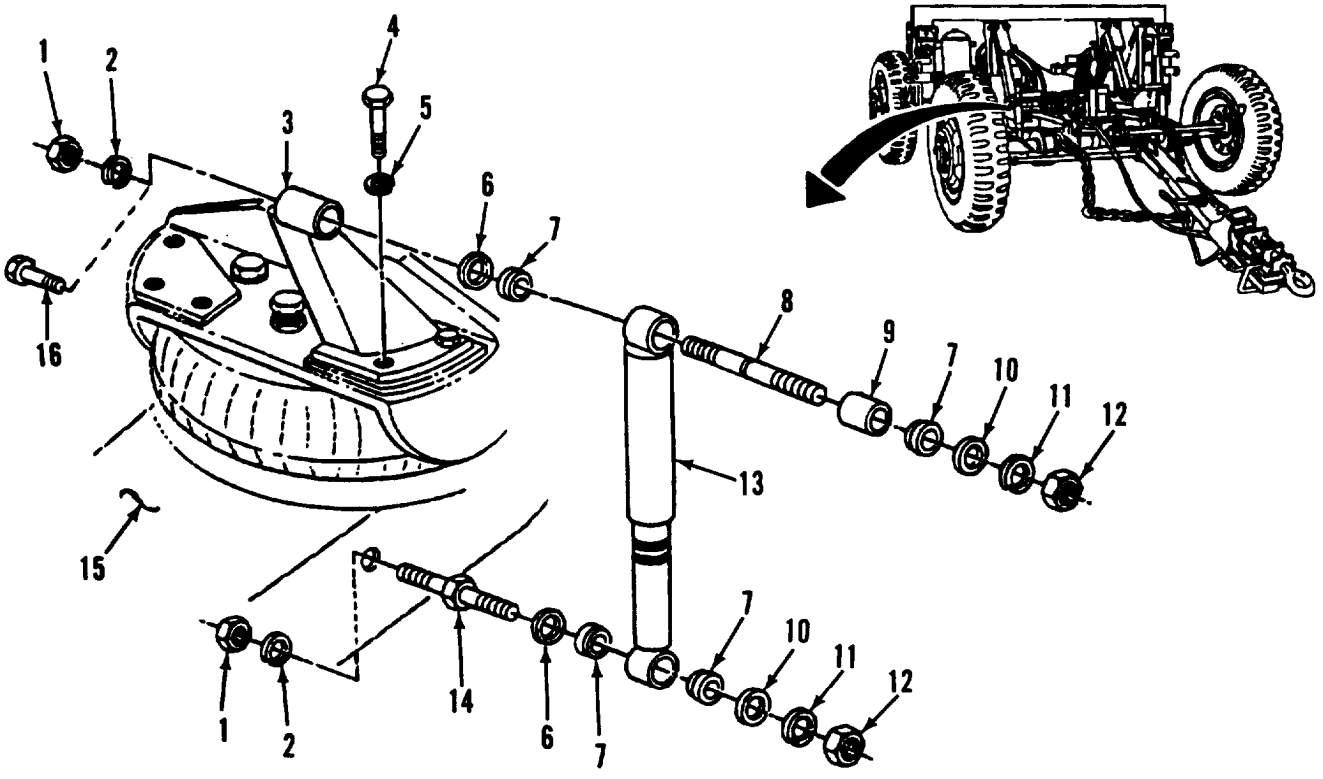

4-61. SHOCK ABSORBER AND MOUNTING BRACKET REPLACEMENT (Con't).

5. Remove bolt (16)or nut (1), lockwasher (2), and upper stud (8) from mounting bracket (3). Discard lockwasher.

6. Remove three bolts (4), lockwashers (5), and mounting bracket (3) from dolly. Discard lockwashers.

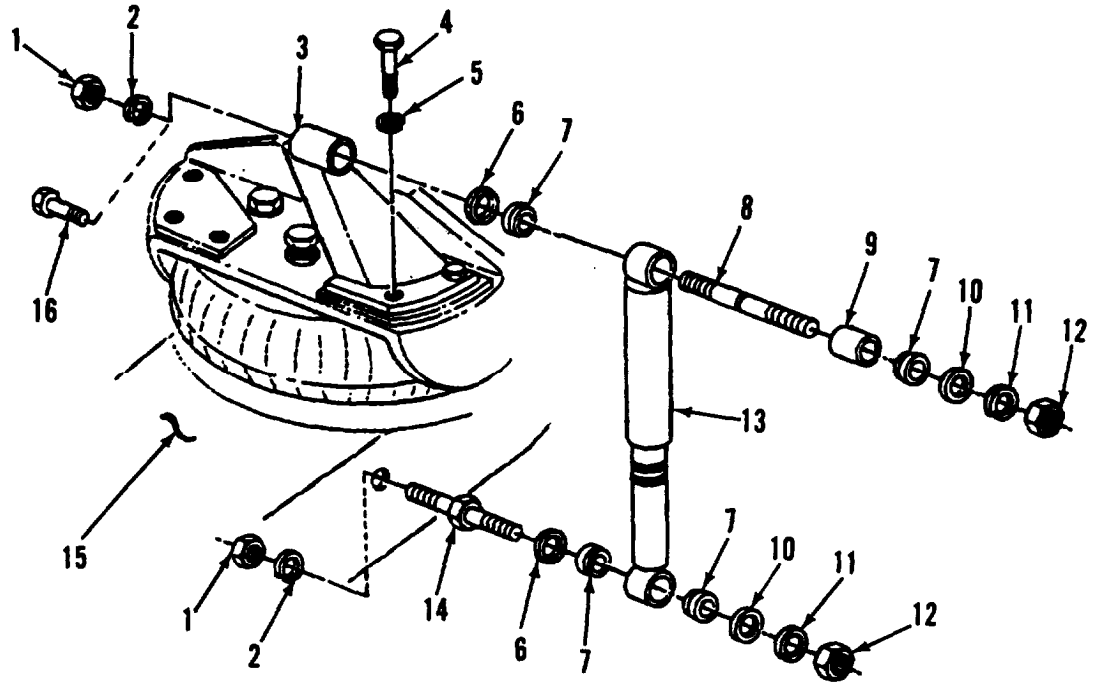

b. Installation

NOTE

l Before installing shock absorber, paint circular bands as required per Appendix G, Figure G-2.

l Perform steps 1 through 3 only if mounting bracket was removed.

1. Install mounting bracket (3) on dolly with three new lockwashers (5) and bolts (4).

2. Install nut (1), new lockwasher (2), and upper stud (8) or bolt (16) on mounting bracket (3).

3. Install lower stud (14) on bracket (15) with new lockwasher (2) and nut (1).

NOTE

Position shock absorber with large diameter on top.

4. Install one washer (6) on lower stud (14) and one washer (6) on upper stud (8) or bolt (16). Install shock absorber (13), sleeve (9), and four rubber bushings (7) on upper and lower studs (8 and 14) or bolts (16).

5. Install washer (10), new lockwasher (11), and nut (12) on lower stud (14).

6. Install washer (10), new lockwasher (11), and nut (12) on upper stud (8) or bolt (16).

4-62. SUSPENSION BAR MAINTENANCE (EXCEPT M832 SN J089-001 THRU 159 AND J017-160 THRU 350).

This Task Covers:

a. Removal
b. Inspection and Repair
c. Installation

Initial Setup:

Equipment Conditions:

- Front and rear dollies uncoupled (para 2-11).
- Alining rods disconnected (pars 4-65).
- Air reservoir removed (front dolly only) (pare 4-43).
- Toolbox removed (rear dolly only) (pare 4-51 or 4-52).
- Distribution box removed (rear dolly only) (pars 4-20 or 4-21).

ToolS/Test Equipment:

- General mechanic's tool kit
- Common no. 1 shop set
- Welding tool kit

Materials/Parts

- Two locknuts

Personnel Required: Two

References:

- TB 9-2300-247-40
- TM 9-237

a. REMOVAL

WARNIiNG

Using appropriate jack stands, position stands under suspension bar to support and stabilize vehicle weight.

NOTE

Replacement of front and rear suspension bar is similar for all dolly sets except M832 SN J089-001 thru 159 and J017-160 thru 350. Replacement of front suspension bar is shown.

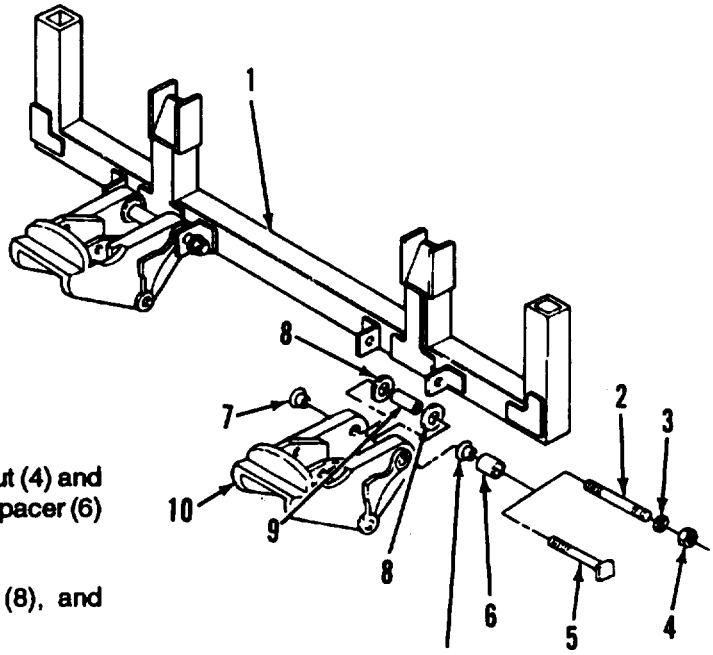

1. Remove bolt (5) or threaded rod (2) with locknut (4) and washer (3) from suspension bar (1). Remove spacer (6) from bolt or threaded rod. Discard locknut.

2. Remove suspension bar (1), two washers (8), and spacer (9) from bracket (10).

3. Remove two rubber bushings (7) from bracket (10).

4-62. SUSPENSION BAR MAINTENANCE (EXCEPT M832 SN J089-001 THRU 159 AND J017-160 THRU 350) (Con't).

b. INSPECTION AND REPAIR

1. Inspect suspension bar for breaks, cracks, and bends.

2. Weld cracked suspension bar in accordance with TB 9-2300-247-0 and TM 9-237.

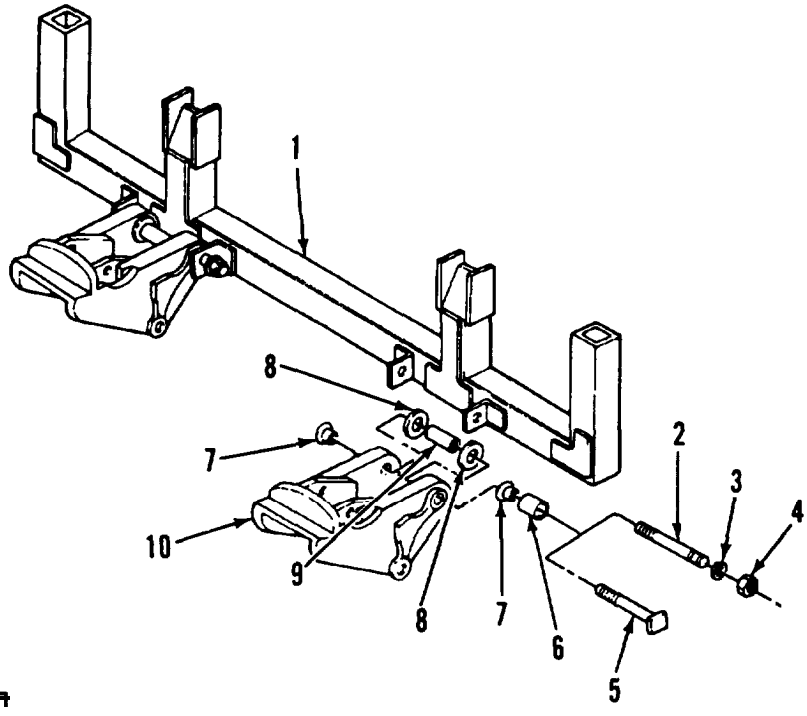

c. INSTALLATION

NOTE

Perform the following steps at each side of suspension bar.

1. Install two rubber bushings (7) on bracket (10).

2. Position suspension bar (1), spacer (9), and two washers (8) on bracket (10).

3. Install spacer (6) on bolt (5) or threaded rod (2).

4. Install bolt (5) or threaded rod (2) with washer (3) and new locknut (4) on suspension bar (1).

FOLLOW-ON TASKS:

- Install distribution box (rear dolly only) (para 4-20 or 4-21).
- install toolbox (rear dolly only) (pars 4-51 or 4-52).
- Install air reservoir (front dolly only) (pars 4-43).
- Connect alining rods (para 4-65).
- Couple front and rear dollies (pars 2-19).

4-83. REAR SUSPENSION BAR MAINTENANCE (M832 SN J089-001 THRU 159 AND J017-160 THRU 350 ONLY).

This Task Covers:

a. Removal
b. Inspection
c. Installation

Initial Setup:

Equipment Conditions:

- Front and rear dollies uncoupled (pars 2-11).
- Reflectors removed (pare 4-72).
- Data plates removed (pars 4-73).
- Toolbox and platform removed (para 4-53).
- Dolly set caster assemblies (M832 SN J069-001 thru 159 and J017-160 thru 350 only) removed, if necessary (pars 2-10).

Materials/Parts:

- Two locknuts
- Eight cotter pins
- Ten resilient mounts
- Eight sleeve bushings
- Two sleeve spacers
- Two machine bolts
- Four lockwashers
- Eight tube spacers

Personnel required: Two

Tools/Test Equipment:

- General mechanic's tool kit
- Common no. 1 shop set
- Fabricated steel spacers (Appendix G)

NOTE

If suspension bar for this model requires caster mounts, see Appendix G for rear suspension bar modification instructions.

a. REMOVAL

Remove two screws (6), lockwashers (5), and wire rope assemblies (4) from suspension bar (1). Discard lockwashers.

2. Remove two screws (3), lockwashers (7), and wire rope assemblies (2) from suspension bar (1). Discard lockwashers.

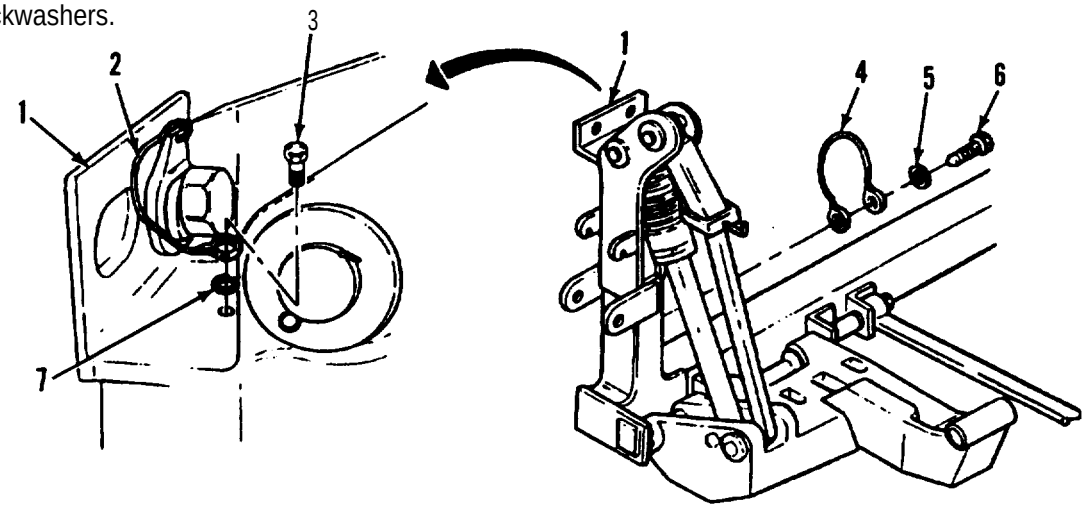

4-63. REAR SUSPENSION BAR MAINTENANCE (M832 SN J089-001 THRU 159 AND J017-160 THRU 350 ONLY) (Con't).

WARNING

Make sure assistant is 8 holding suspension bar upright. Failure to follow this warning could result in injury to personnel.

NOTE

Have an assistant hold suspension bar in upright position.

3. Remove eight cotter pins (8) and flat washers (9) from four straight pins (10) attaching upper ends of two hydraulic cylinders (12) and strut assemblies (11) to suspension bar (1). Discard cotter pins.

4. Remove four straight pins (10) from two hydrauliccyiinders (12) and strut assemblies (11).

5. With the aid of an assistant, lower suspension bar (1) to ground.

6. Loosen two locknuts (13) and move two machine bolts (15) enough to provide clearance between suspension bar (1) and square end of each machine bolt (15).

7. Remove locknut (13) and flat washer (14) from each of two machine bolts (15). Retain locknuts.

8. Cut off square ends of two machine bolts (15).

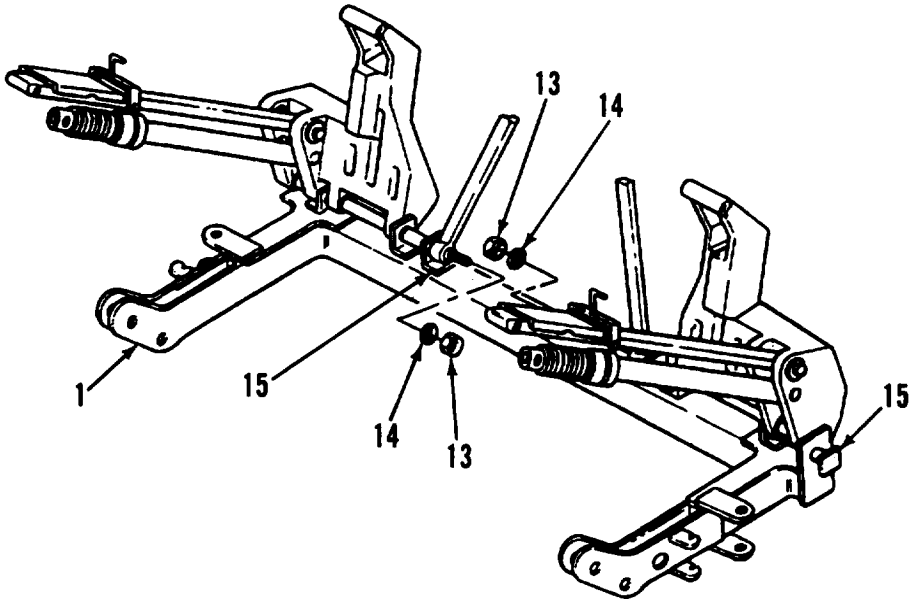

4-63. REAR SUSPENSION BAR MAINTENANCE (M832 SN J089-001 THRU 159 AND J017-160 THRU 350 ONLY) (Con't).

9. Starting on inboard side of either machine bolt (15), add fabricated spacer (18) and install locknut (13). Turn locknut (13) against spacer (18) to pull machine bolt (15) through mounting bracket (16) and stabilizer (17). Remove locknut (13) and add additional fabricated spacers (18) as necessary until machine bolt (15) is completely removed from mounting bracket (16). Repeat for other side. Discard bolts and locknuts.

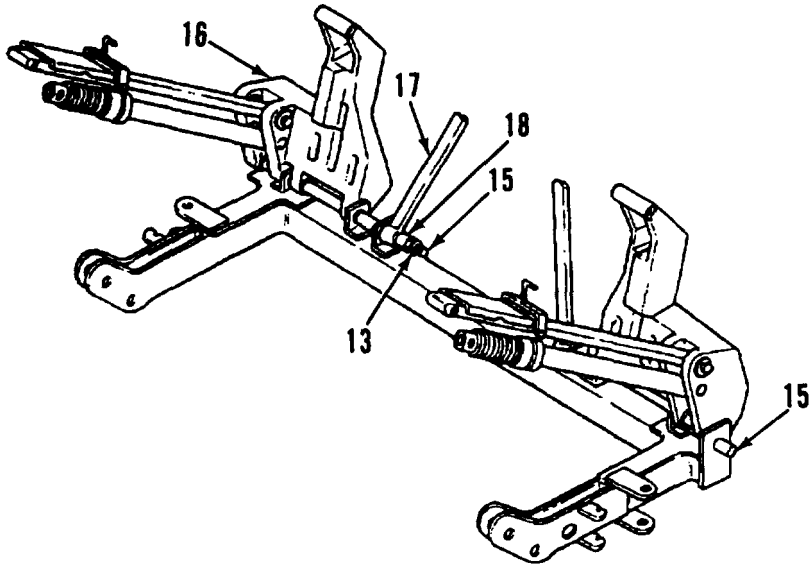

10. Remove four tube spacers (21, 22, 24, and 25) and two flat washers (23) from each of two mounting brackets (16).

11. Remove suspension bar (1) from dolly.

12. For each side, remove four resilient mounts (19) and sleeve bushings (20) from mounting bracket (16) and remove resilient mount (19) and sleeve spacer (26) stabilizer (17). Discard resilient mounts, sleeve bushings, and sleeve spacers.

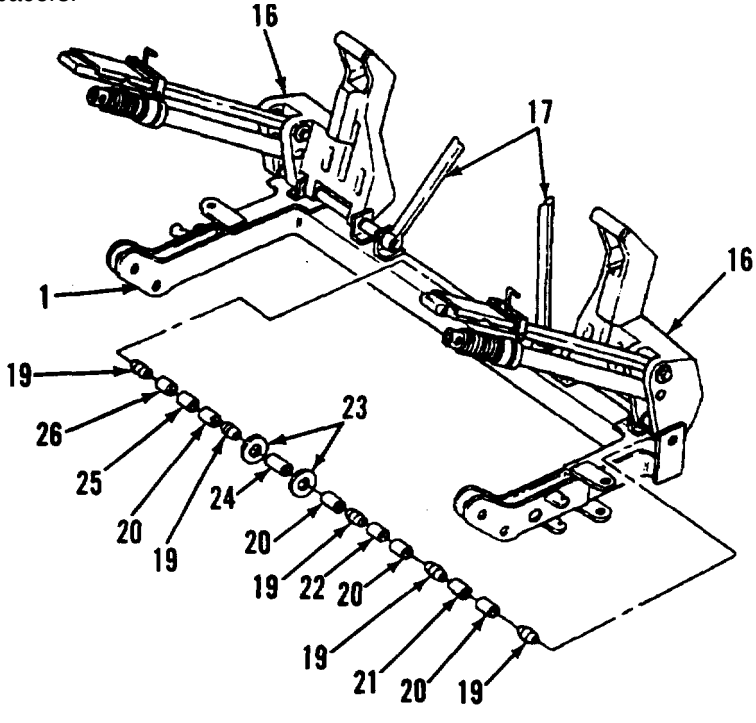

4-63. REAR SUSPENSION BAR MAINTENANCE (M832 SN J089-001 THRU 159 AND J017-160 THRU 350 ONLY) (Con't).

b. INSPECTION

Inspect suspension bar, flat washers, straight pins, and stabilizers for breaks, cracks, and bends. Replace damaged hardware.

c. INSTALLATION

1. For each side, install four new resilient mounts (19) with four new 1-5/16-in.-long sleeve bushings (20) in mounting bracket (16).

2. For each side, install new resilient mount (19) with new sleeve spacer (26) in stabilizer (17).

3. Place suspension bar (1) on ground in proper position for reassembly.

4. Starting on inboard side of mounting bracket (16), install 2-3/4-in.-long tube spacer (25), flat washer (23), 7-1/8-in.-long tube spacer (24), flat washer (23), 1-5/16-in.-long tube spacer (22), and 2-5/16-in.-long tube spacer (21) in mounting bracket (16).

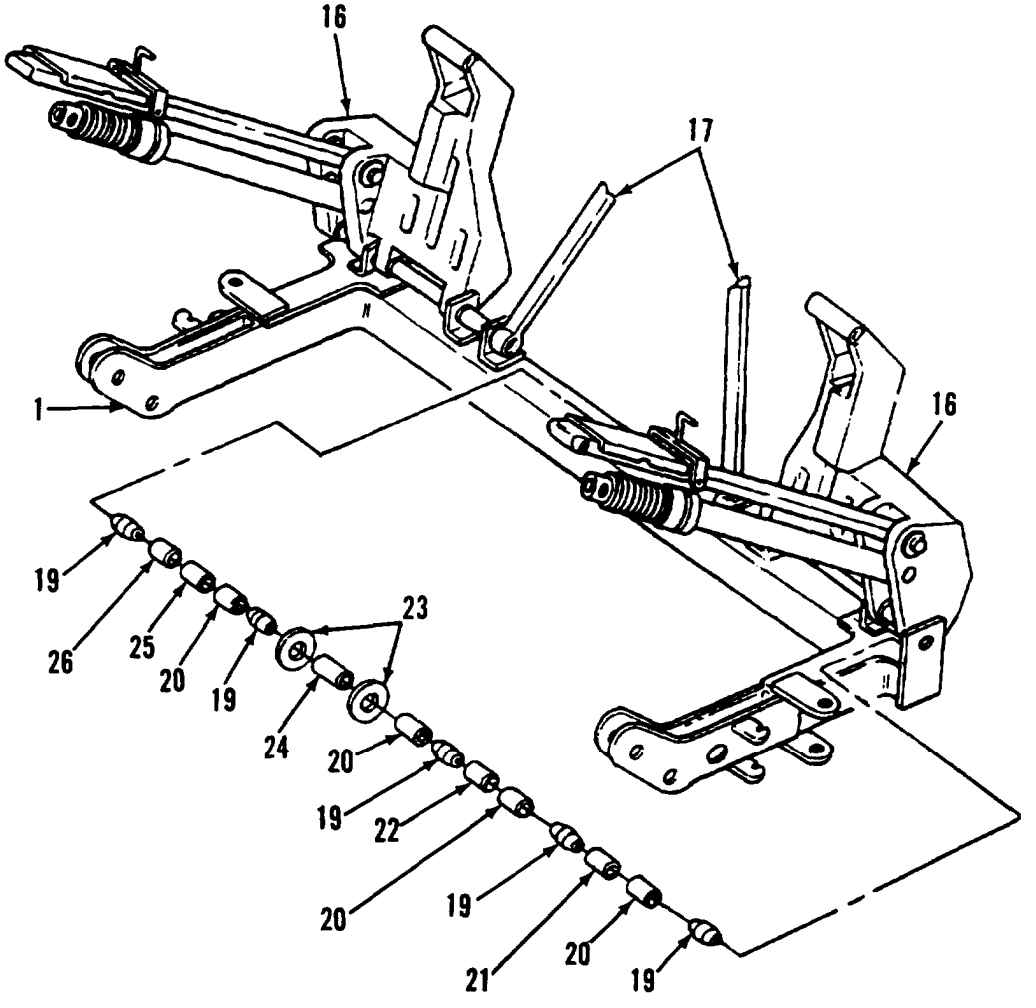

4-63. REAR SUSPENSION BAR MAINTENANCE (M832 SN J089-001 THRU 159 AND J017-160 THRU 350 ONLY) (Con't).

5. Ensuring proper alinement is maintained, install new machine bolt (15) through mounting bracket (16) and stabilizer (17).

NOTE

Machine bolts may have two threaded ends. Adjust the following steps accordingly.

6. Install flat washer (14) and new locknut (13) on machine bolt (15).

7. Repeat steps 4 through 6 for opposite side.

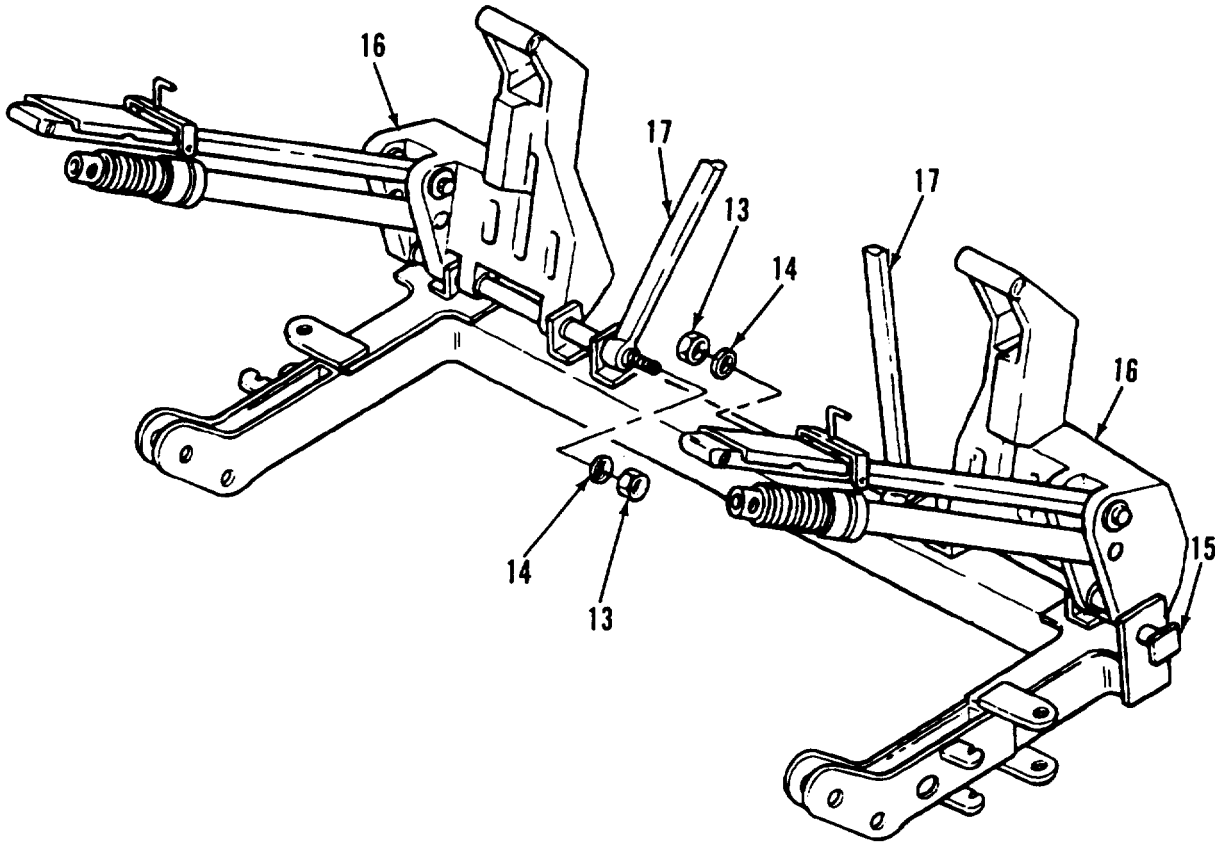

WARNING

Make sure assistant is holding suspension bar upright. Failure to follow this warning could result in injury to personnel.

NOTE

Have an assistant hold suspension bar in upright position.

4-63. REAR SUSPENSION BAR MAINTENANCE (M832 SN J089-001 THRU 159 AND J017-180 THRU 350 ONLY) (Con't)

8. With the aid of an assistant, make sure each of two hydraulic cylinders (12) aline with suspendsion bar (1), and raise suspension bar (1) to an upright position and hold securely.

9. Install four straight pins (10) through suspension bar (1) and two hydraulic cylinders (12) and strut assemblies (11).

10. Install eight flat washers (9) and new cotter pins (8) on four straight pins (10).

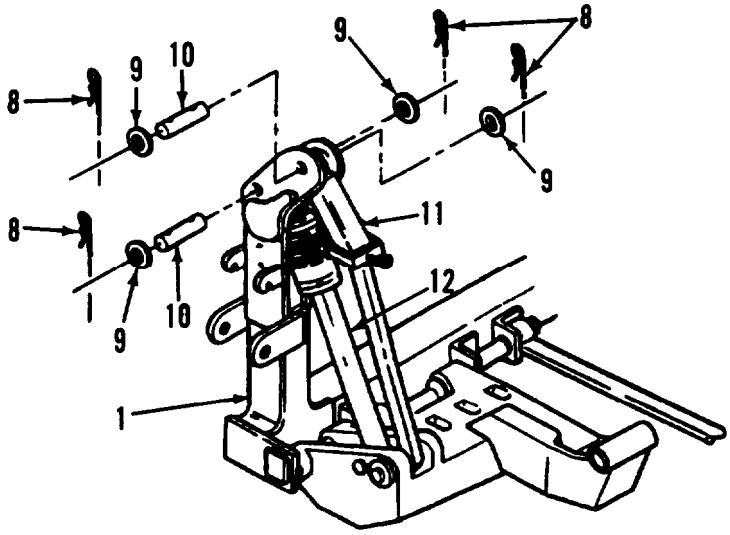

11. Install two screws (3), new lockwashers (7), and wire rope assemblies (2) on suspension bar (1).

12. Install two screws (6), new lockwashers (5), and wire rope assemblies (4) on suspension bar (1).

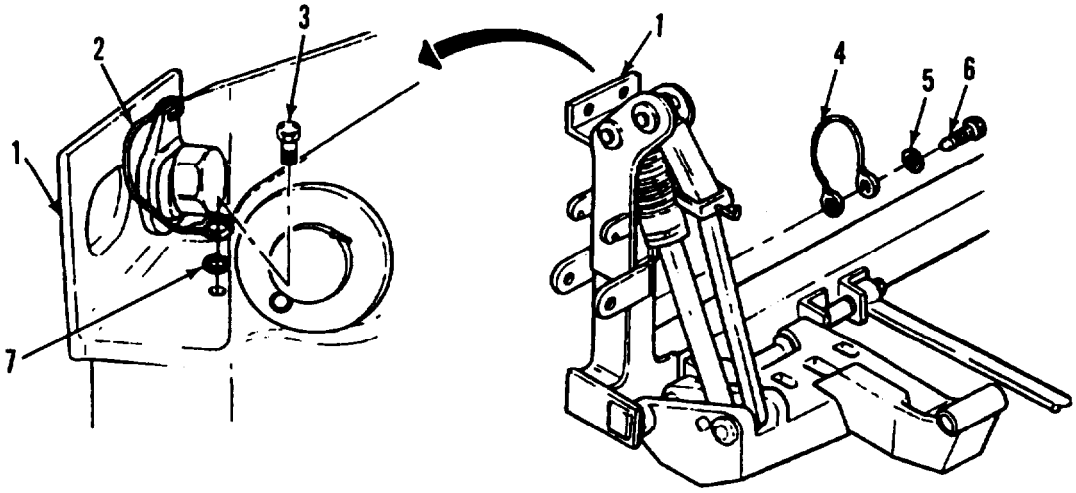

FOLLOW-ON TASKS:

- Install toolbox and platform (para 4-53).
- Install data plates (pars 4-73).
- Install reflectors (para 4-72).
- Couple front and rear dollies (pare 2-19).

4-64. FRONT SUSPENSION BAR MAINTENANCE (M832 SN J089-001 THRU 159 AND J017-160 THRU 350 ONLY).

This Task Covers:

a. Removal
b. Inspection
c. Installation

Initial Setup:

Equipment Conditions:

- Front and rear dollies uncoupled (pars 2-11),
- Air reservoir removed (pars 4-43).
- Reflectors removed (pars 4-72).
- Data plates removed (pars 4-73).
- Dolly caster assemblies removed, if necessary (para 2-10).

Tools/Test Equipment:

- General mechanic's tool kit
- Common no. 1 shop set
- Fabricated spacers

Materials/Parts

- six locknuts
- Eight cotter pins
- One stud
- Six resilient mounts
- Seven sleeve bushings
- Two threaded rods
- Four lockwashers

Personnel Required: Two

NOTE

If suspension bar for this model requires caster mounts, see Appendix G for front suspension bar modification instructions.

a REMOVAL

1. Remove two screws (10) and lockwashers (8) from two wire rope assemblies (9). Discard lockwashers.

2. Remove two screws (5), lockwashers (7), and wire rope assemblies (6) from suspension bar (4). Discard lockwashers.

3. Remove two screws (3), retaining straps (2), and webbing straps (1) from suspension bar (4).

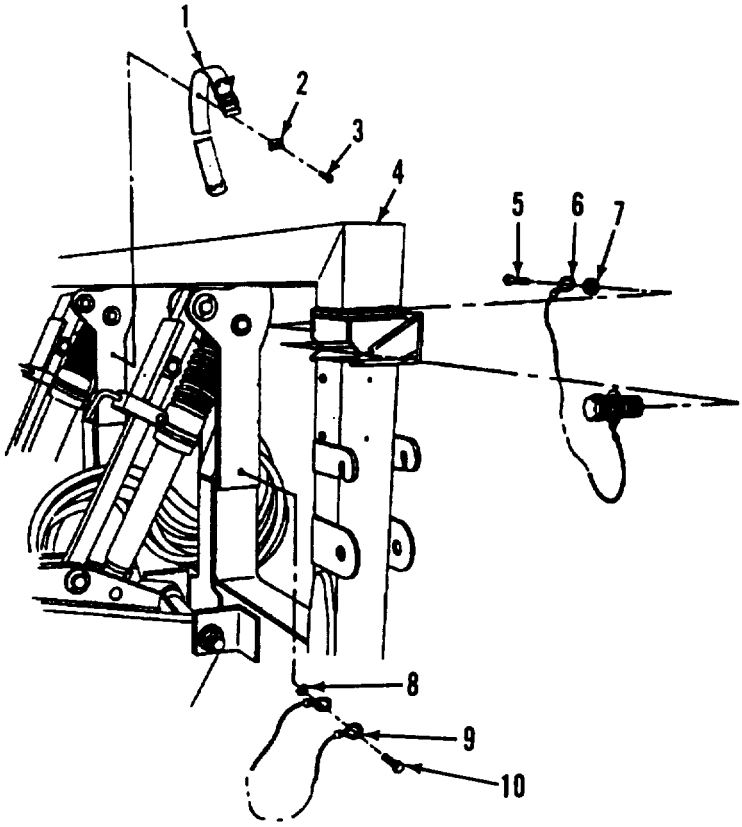

4-64. FRONT SUSPENSION BAR MAINTENANCE (M832 SN J089-001 THRU 159 AND J017-160 THRU 350 ONLY) (Con't).

WARNING

Make sure towing safety chain is properly secured to suspension bar. Failure to follow this warning could result in injury or death to personnel.

4. Remove towing safety chain (11) from drawbar. Support suspension bar in an upright position by wrapping towing safety chain (11) around top of suspension bar (4) to hold it in place.

5. Remove eight cotter pins (12) and flat washers (13) from four straight pins (14) attaching two hydraulic cylinders (15) and strut assemblies (16) to top of suspension bar (4). Discard cotter pins.

6. Remove four straight pins (14) from two hydraulic cylinders (15) and strut assemblies (16).

7. With the aid of an assistant, remove towing safety chain (11) and lower suspension bar (4) to ground.

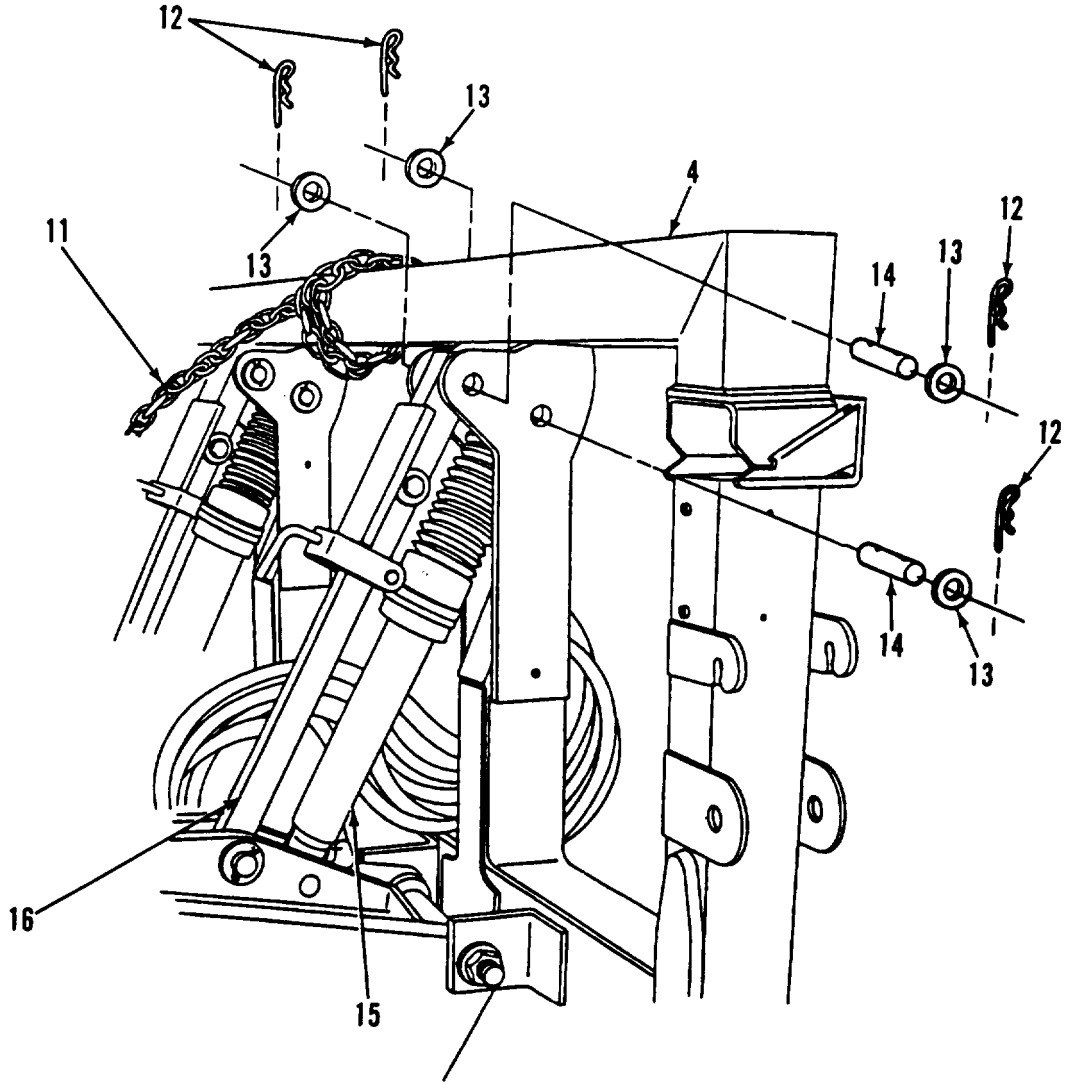

4-64. FRONT SUSPENSION BAR MAINTENANCE (M832 SN J089-001 THRU 159 AND J017-160 THRU 350 ONLY) (Con't).

8. Remove six locknuts (20) and flat washers (19) from center stud (21) and two threaded rods (18) attaching two mounting brackets (17) to suspension bar (4).

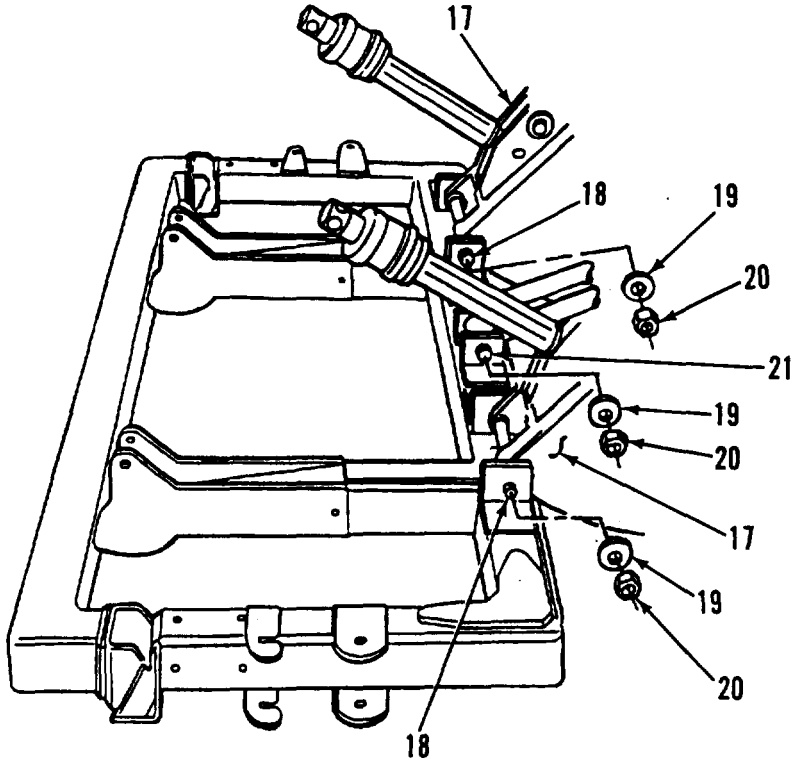

9. Starting on outboard side of threaded rod (18) in mounting bracket (1 7), add fabricated spacer (22) and install locknut (20). Turn locknut (20) against spacer (22) to pull threaded rod (18) through mounting bracket (17). Remove locknut (20) and add add additional fabricated spacers (22) as necessary until threaded rod (18) is completely removed from mounting bracket (17). Repeat for other mounting bracket (17). Discard threaded rods and locknuts.

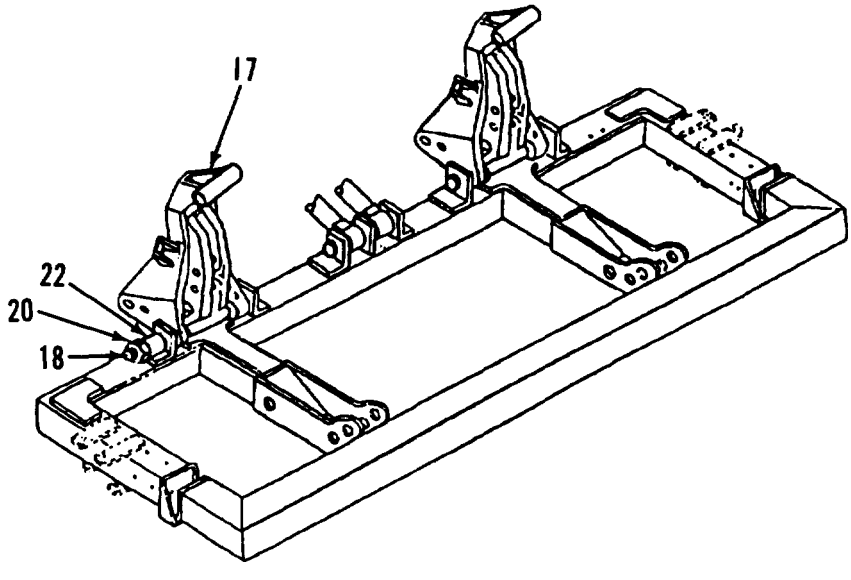

4-64. FRONT SUSPENSION BAR MAINTENANCE (M832 SN J089-001 THRU 159 AND J017-160 THRU 350 ONLY) (Con't).

10. Remove tuba spacer (24) and two flat washers (23) from each of two mounting brackets (17).

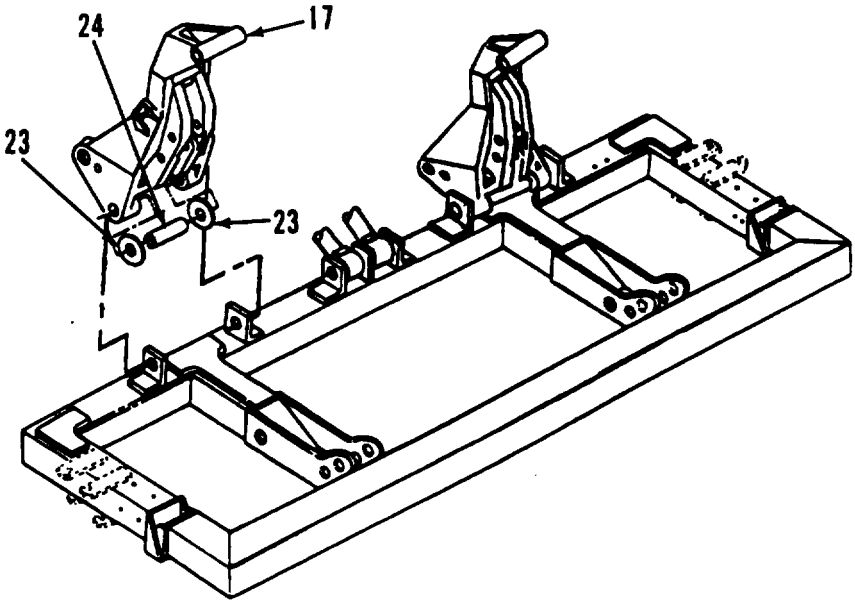

11. Starting on either side of center stud (21), add fabricated spacer (22) and install locknut (20) on stud (21). Turn locknut (20) against spacer (22) to pull stud (21) through two stabilizers (25). Add additional fabricated spacers (22) as necessary until stud (21) is completely removed from stabilizers (25). Discard stud.

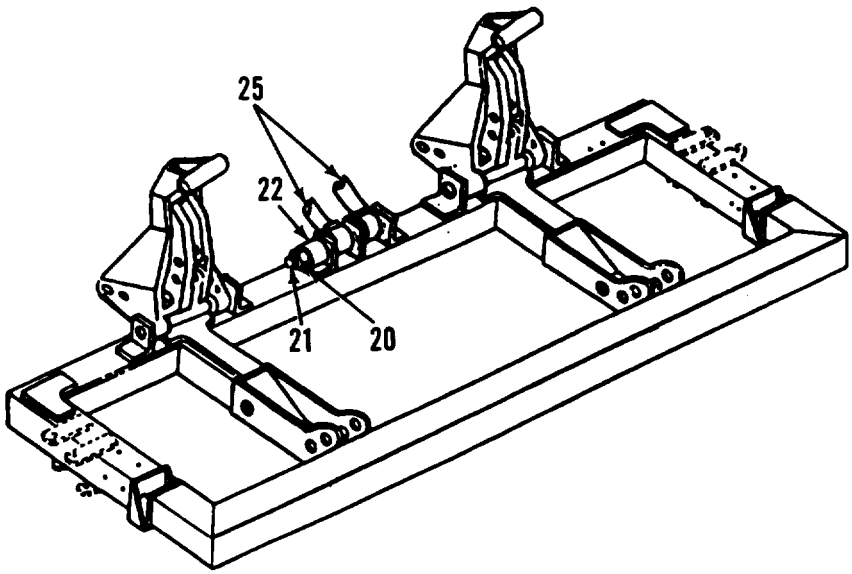

4-64. FRONT SUSPENSION BAR MAINTENANCE (M832 SN J089-001 THRU 159 AND J017-160 THRU 350 ONLY) (Con't).

12. Remove sleeve bushing (30) from center mounting point on suspension bar (4). Discard sleeve bushing.

13. Remove suspension bar (4) from dolly.

14. Remove six resilient mounts (27) and sleeve bushings (26, 28, and 29) from two mounting brackets (17) and stabilizers (25). Discard resilient mounts and sleeve bushings.

b. INSPECTION

Inspect webbing straps, retaining straps, suspension bar, flat washers, straight pins, and stabilizers for frays, tears, breaks, cracks, and bends. Replace damaged hardware.

c. INSTALLATION

1. Install four new resilient mounts (27) and two 1-3/8-in.-long sleeve bushings (28) and 7/8-in.-long sleeve bushings (26) in two mounting brackets (17). Make sure 1-3/8-in.-long sleeve bushings (28) are installed closest to two stabilizers (25).

2. Install two new resilient mounts (27) and 7/6-inch-long sleeve bushings (29) in two stabilizers (25).

3. Place suspension bar (4) on ground in proper position for reassembly.

NOTE

The front axle may need to be rotated around the center line with drawbar to allow stabillzers to aline with suspension bar.

4. Position one 1/2-inch-long sleeve bushing (30) inside center mounting position on suspension bar (4).

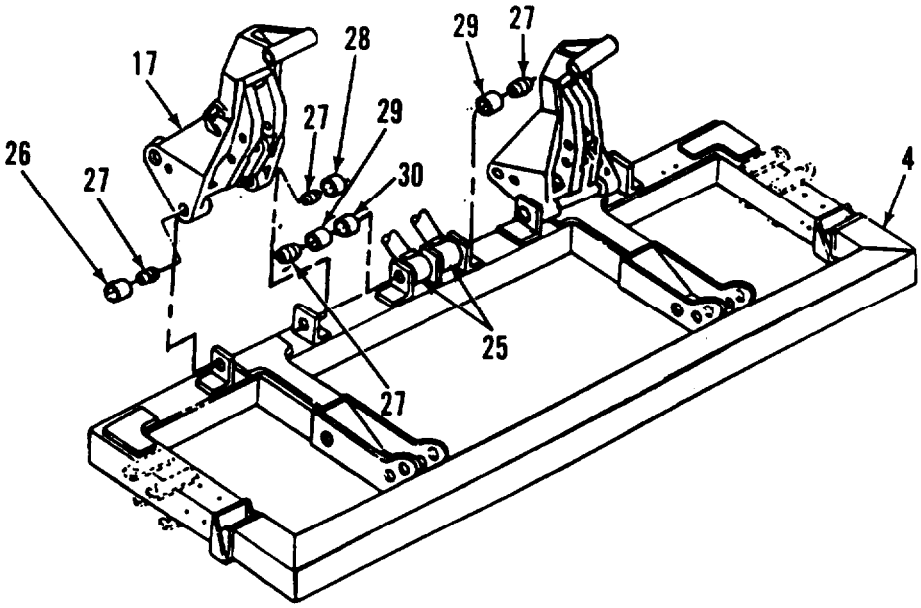

4-64. FRONT SUSPENSION BAR MAINTENANCE (M832 SN J089-001 THRU 159 AND J017-160 THRU 350 ONLY) (Con't).

5. Ensuring proper alinement is maintained, install new center stud (21) through suspension bar (4) and two stabilizers (25).

6. Install two flat washers (19) and new locknuts (20) on ends of center stud (21).

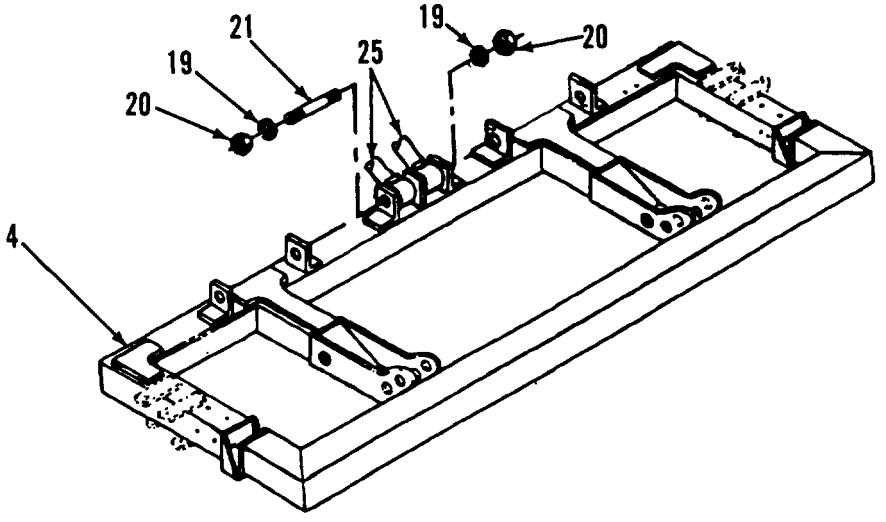

NOTE

Perform steps 7 through 9 for both mounting brackets.

7. Position two flat washers (23) and tube spacer (24) in mounting bracket (17).

8. Ensuring proper alinement is maintained, install new threaded rod (18) through mounting bracket (17).

9. Install two flat washers (19) and new locknuts (20) on threaded rod (18).

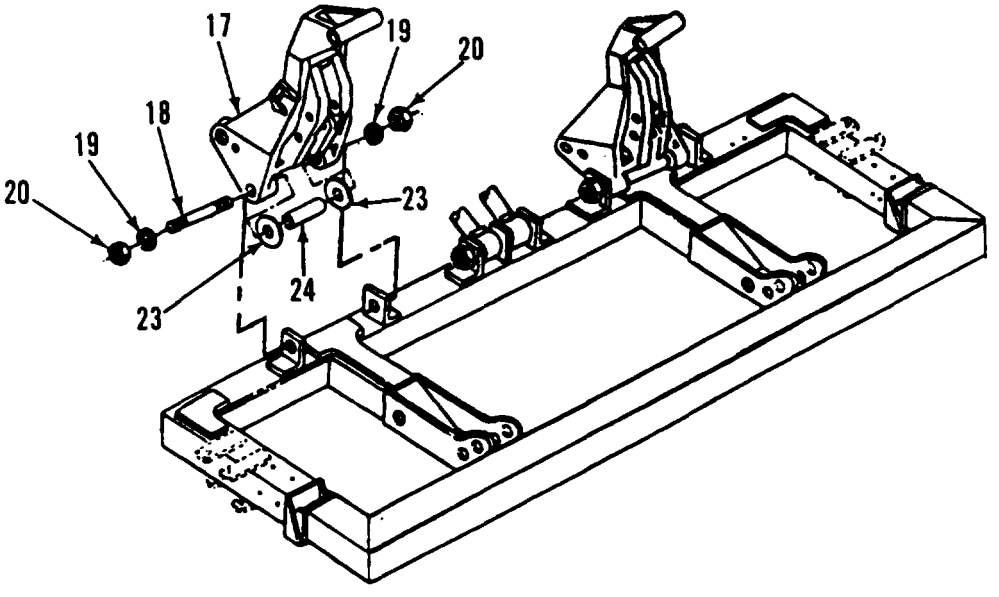

4-84. FRONT SUSPENSION BAR MAINTENANCE (M832 SN J089-001 THRU 159 AND J017-180 THRU 350 ONLY) (Con't).

WARNING

Make sure towing safety chain is property secured to suspension bar. Failure to follow this warning could result in injury or death to personnel.

10. With the aid of an assistant, make sure two hydraulic cylinders (15) aline with upper portion of suspension bar (4), then raise suspension bar (4) to an upright position and secure with towing safety chain (11).

11. Install four straight pins (14) through suspension bar (4) and two hydraulic cylinders (15) and strut assemblies (16).

12. install eight fiat washers (13) and new cotter pins (12) on four straight pins (14).

13. Remove towing safety chain (11) from suspension bar (4) and properly route on drawbar assembly.

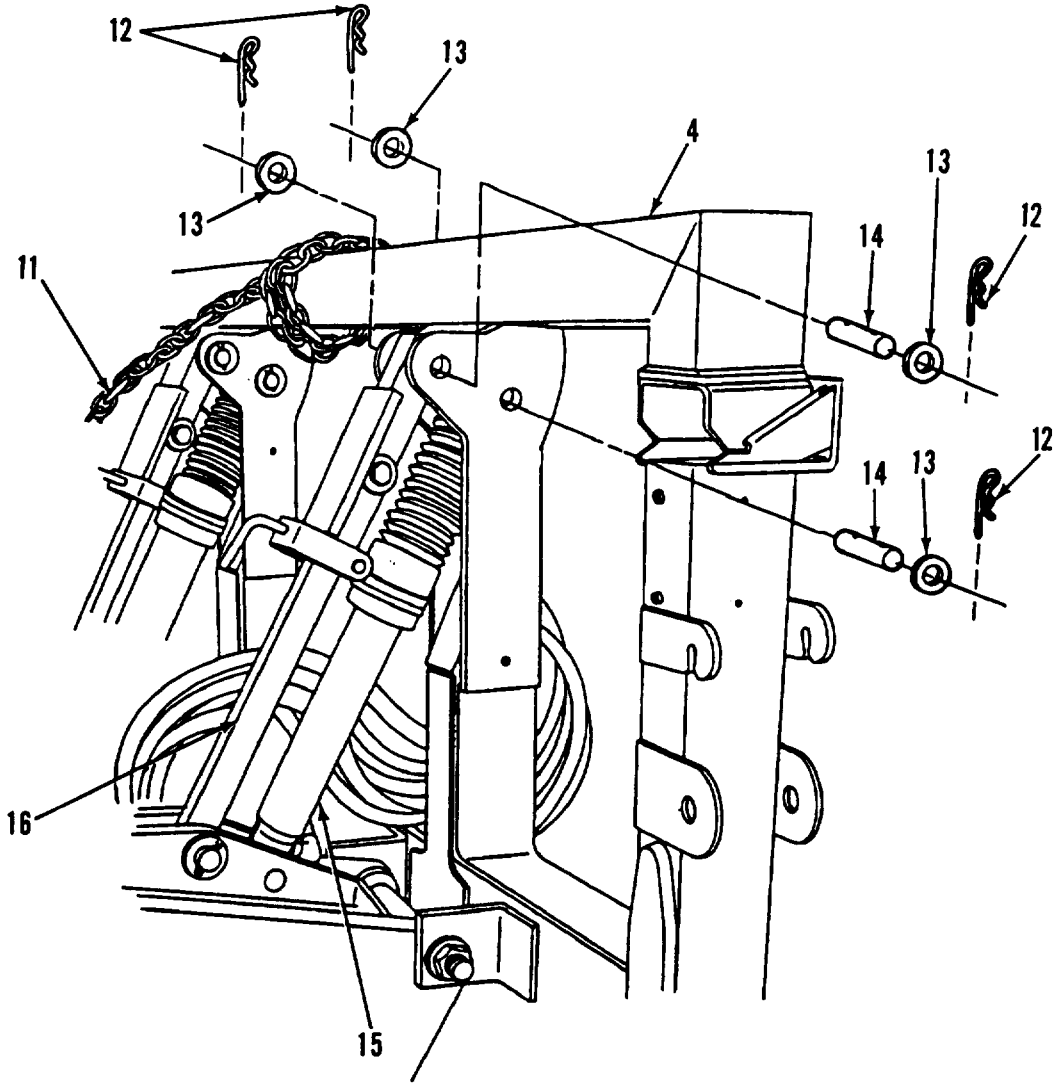

4-64. FRONT SUSPENSION BAR MAINTENANCE (M832 SN J089-001 THRU 159 AND J017-160 THRU 350 ONLY) (Con't).

14. Install two webbing strops (1), retaining straps (2), and screws (3) on suspension bar (4).

15. Install two screws (5), new lockwashers (7), and wire rope assemblies (6) on suspension bar (4).

16. Install two wire rope assemblies (9), new lockwashers (8), and screws (10) on suspension bar (4).

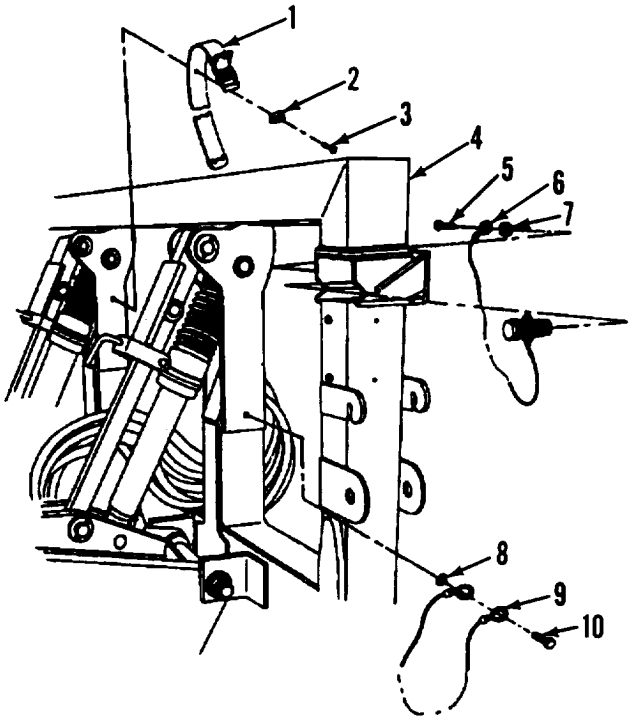

FOLLOW-ON TASKS:

- Install data plates (para 4-73).
- Install reflectors (para 4-72).
- Install air reservoir (pars 4-43).
- Front and rear dollies coupled (para 2-19).

4-65. ALINING ROD REPLACEMENT.

This *Task Covers:*

a. Removal

b. Installation

Initial Setup

Equipment Conditions:

- Dolly set parked on level surface with handbrakes applied (pars 2-2).
- Dolly set uncoupled from towing vehicle (Para 2-16).

Tools/Test Equipment

- General mechanic's tool kit
- Common no. 1 shop set

Materials/Parts:

- Three lockwashers
- Four locknuts

4-65. ALINING ROD REPLACEMENT (Con't).

NOTE

- All models are similar.
- Replacement of front and rear alining rods is the same. Replacement of alining rods on front dolly is shown.

a. REMOVAL

NOTE

- Perform steps 1 through 4 for diagonal connecting link (front dolly).
- Perform steps 5 through 7 for each parallel alining rod.

1. Remove locknut (21), bolt (18), and washer (19) from front of connecting link (20). Discard locknut
2. Remove locknut (22), bolt (16), and connecting link (20) from bracket (2). Discard locknut.
3. Remove three bolts (4) and lockwashers (3) and bracket (2) from mounting bracket(l). Discard lockwashers.
4. Remove two rubber bushings (17) from connecting link (20).
5. Remove locknut (15), screw (10), washer (11), spacer (12), and washer (13) from front of alining rod (9). Discard locknut.
6. Remove locknut (5), washer (6), and alining rod (9) from bolt (8). Discard locknut.
7. Remove two rubber bushings (14) and rubber bushing (7) from alining rod (9).

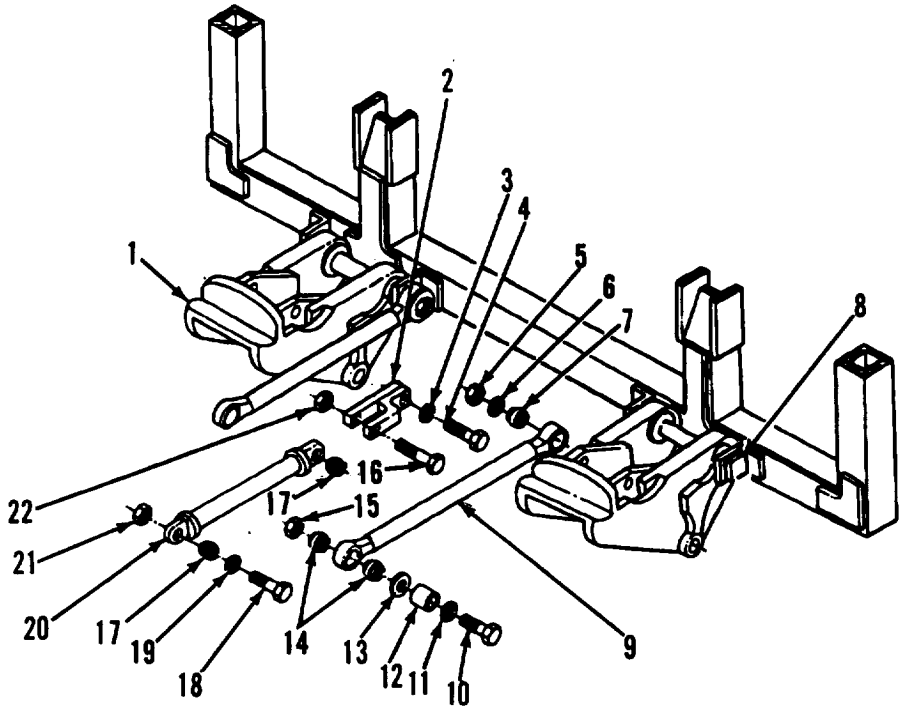

4-65. ALINING ROD REPLACEMENT (Con't).

b. INSTALLATION

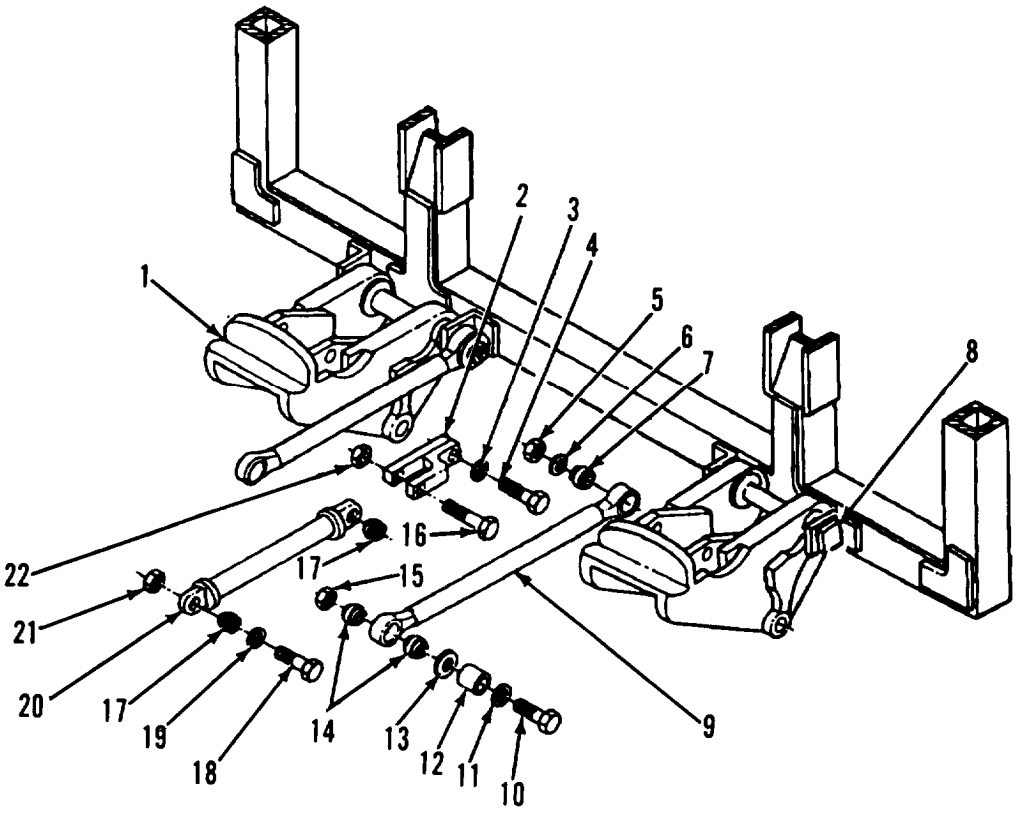

NOTE

- **Perform steps 1 through 3 for each parallel alining rod.**
- **Perform steps 4 through 7 for diagonal connecting link (front dolly).**

1. Install rubber bushing (7) and two rubber bushings (14) on alining rod (9).
2. Install alining rod (9) on boll (8) with washer (6) and new locknut (5).
3. Install front of alining rod (9) with screw (10), washer (11), spacer (12), washer (13), and new locknut (15).
4. Install two robber bushings (17) on connecting link (20).
5. Install bracket (2) on mounting bracket (1) with three new lockwashers (3) and bolts (4).
6. Install connecting link (20) on bracket (2) with bolt (16) and new locknut (22).
7. Install front of connecting link (20) with washer (19), bolt (18), and new locknut (21).

4-66. REAR STABILIZER BAR REPLACEMENT (M832).

This Task Covers:

a. Removal

b. Installation

Initial Setup:

Tools/Test Equipment:

- General mechanic's tool kit

Materials/Parts:

- Four lockwashers
- Eight locknuts

a. REMOVAL

NOTE

Perform the following steps at left and right sides of rear dolly to remove rear stabilizer bar.

1. Remove two locknuts (10), lockwashers (11), mounting bracket (9), rubber bushing (8), base clamp (7), and U-bolt (5) holding rear stabilizer bar (12) to rear axle (6). Discard locknuts and lockwashers.

2. Remove locknut (13), washer (14), and bushing (15) and remove rear stabilizer bar (12) from rear dolly. Discard locknut.

3. Remove locknut (2), washer (3), three bushings (4), rod (16), and tube (17) from mounting bracket (1). Discard locknut.

4-66. REAR STABILIZER BAR REPLACEMENT (M832) (Con't).

b. INSTALLATION

NOTE

Perform following steps at left and right side of rear dolly to install rear stabilizer bar.

1. Install rod (16), tube (17), and three bushings (4) to mounting bracket (1) with washer (3) and new locknut (2).
2. Install rear stabilizer bar (12) to rod (18) with bushing (15), washer (14), and new locknut (13).
3. Inetall rear stabilizer bar (12) to rear axle (8) with U-bolt (5), base clamp (7), rubber bushing (8), mounting bracket (9), two new lockwashers (11), and new locknuts (10).

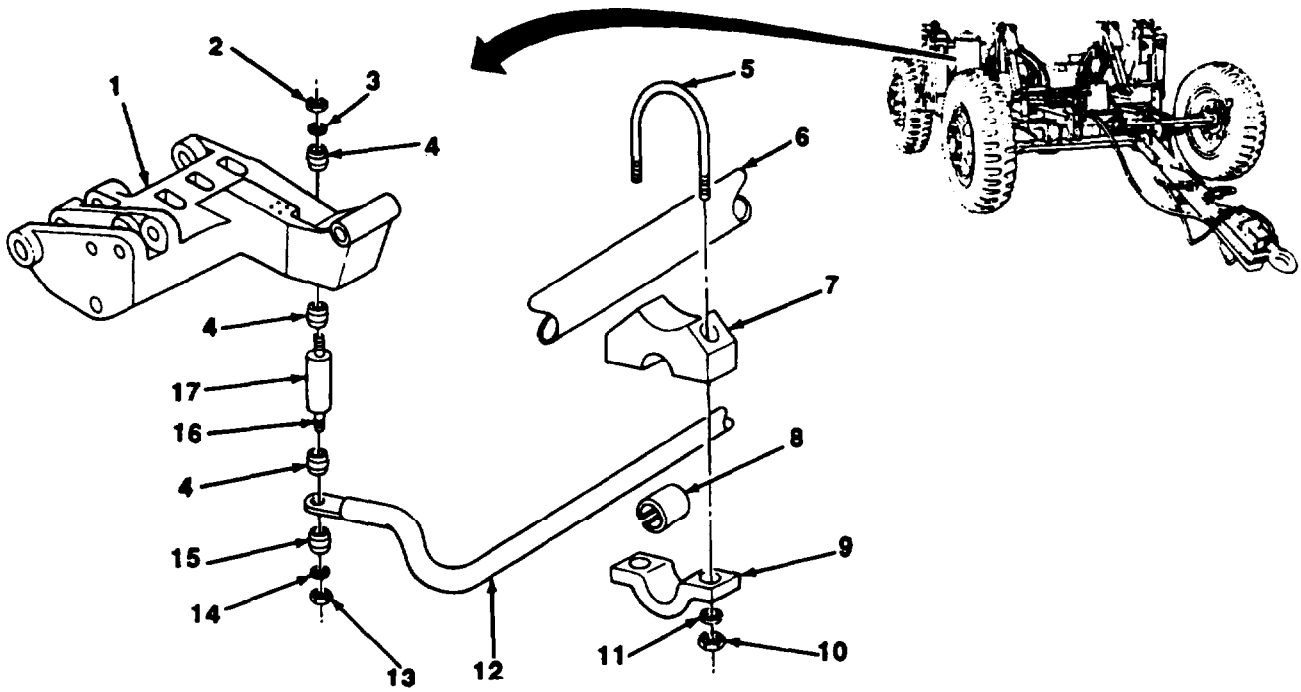

4-87. FRONT STABILIZER BAR REPLACEMENT (M832).

This Task Covers:

a. Removal

b. installation

Initial Setup:

Equipment Conditions:

- Dolly set parked on level surface with hand brakes applied (pars 2-2).
- Dolly set uncoupled from towing vehicle (para 2-16).

Materials/Parta:

- Nonelectrical wire (as required) (item 19, Appendix E)
- Four locknuts
- Four lockwashers

Tools/Test Equipment

. General mechanic's tool kit

a. REMOVAL I

NOTE

Perform the following steps at left and right sides of front dolly to remove front stabilizer bar.

1. Remove nonelectrical wire (11) from four screws (12). Remove four screws (12), lockwashers (13), and washers (14), mounting bracket (15), rubber bushing (17), and retaining strap (16) connecting front stabilizer bar (7) to front dolly. Discard nonelectrical wire and lockwashers.

2. Remove locknut (10), washer (9), and bushing (8) from front stabilizer bar (7), and remove front stabilizer bar (7) from front dolly. Discard locknut.

3. Remove locknut (4), three washers (3) and bushings (2), rod (6), and tube (5) from mounting bracket (1). Discard locknut.

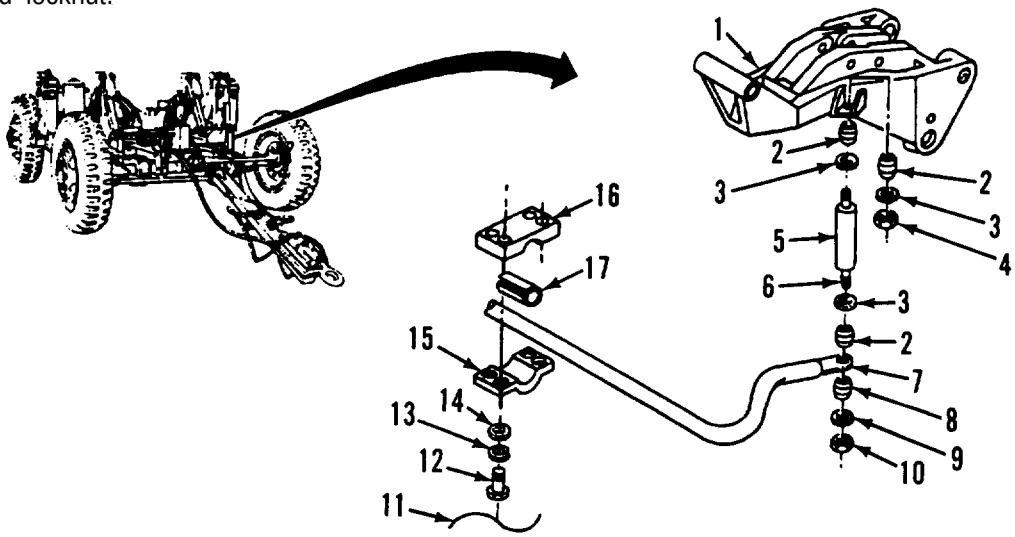

4-87. FRONT STABILIZER BAR REPLACEMENT (M832) (Con't).

b. INSTALLATION

NOTE

Perform the following steps at left and right sides of front dolly to install front stabilizer bar.

1. Install rod (6), tube (5), and three bushings (2) on mounting bracket (1) with three washers (3) and new locknut (4).

2. Install front stabilizer bar (7) on rod (6) with bushing (8), washer (9), and new locknut (10).

3. Install front stabilizer bar (7) on front dolly with retaining strap (16), rubber bushing (17), mounting bracket (15), and four washers (14), new lockwashers (13), and screws (12). Install new nonelectrical wire (11) on four screws (12).

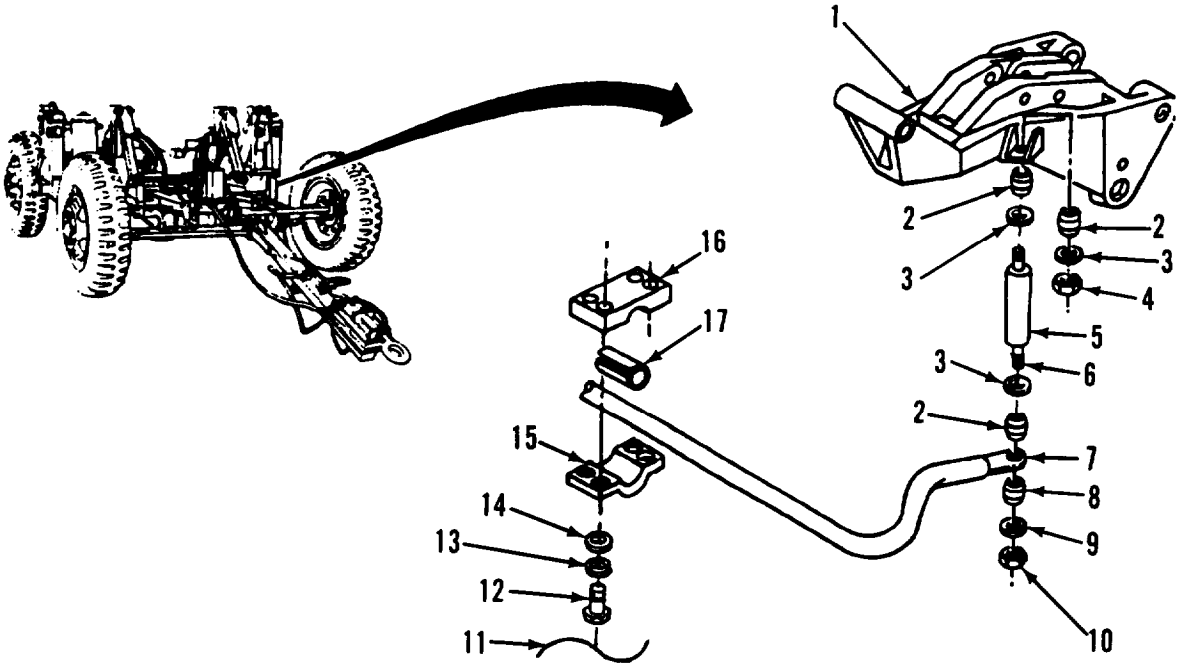

4-68. REAR AXLE YOKE AND MOUNTING BRACKET MAINTENANCE (M832 SN J089-001 THRU 159 AND J017-160 THRU 350 ONLY).

This Task Covers:

a. Removal
b. Inspection
c. Installation

Initial Setup:

Equipment Conditions:

- Rear stabilizer bar removed (para 4-66).
- Connecting link removed (pare 4-65).
- Rear distribution box removed (para 4-21).
- Branched wiring harness removed (pare 4-25).
- Rear suspension bar removed (pare 4-63).
- Strut removed (para 4-58).
- Hydraulic cylinder removed (para 4-86).
- Shock absorber removed (pars 4-61).
- Air spring removed (pare 4-60).
- Trunnion caps removed (pars 4-34).
- Data plates removed (pars 4-73).
- Composite stoplight-taillight and bracket removed (para 4-24).

Tools/Test Equipment:

- General mechanic's tool kit
- Common no. 1 shop set
- Fabricated steel spacers (Appendix G)

Materials/Parts:

- One lockwasher
- Two locknuts
- Two sleeve bearings
- One threaded rod

a. REMOVAL

NOTE

Right and left mounting brackets and yokes are similar right side is shown.

1. Remove screw (3), lockwasher (4), and clamp (5) securing air hose (2) to mounting bracket (l). Reposition air hose (2) away from mounting bracket (1). Discard lockwasher.

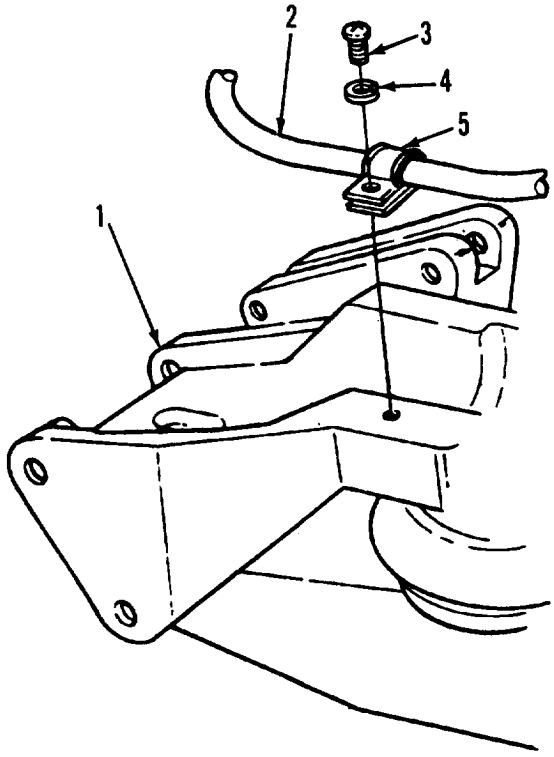

4-68. REAR AXLE YOKE AND MOUNTING BRACKET MAINTENANCE (M832 SN J089-001 THRU 159 AND J017-160 THRU 350 ONLY) (Con't).

2. Remove locknut (7) and flat washer (6) from each end of threaded rod (8). Retain locknuts.

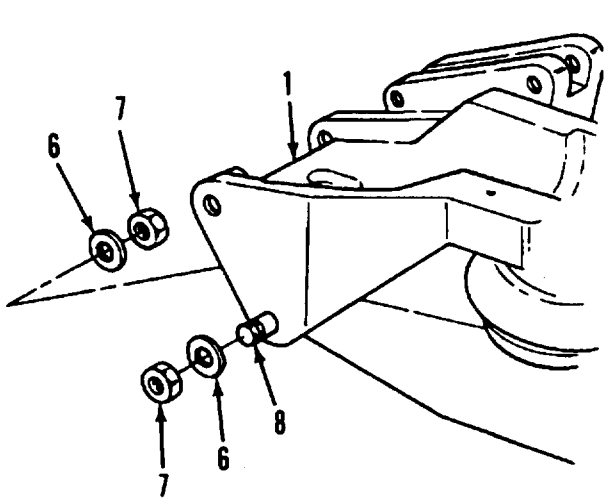

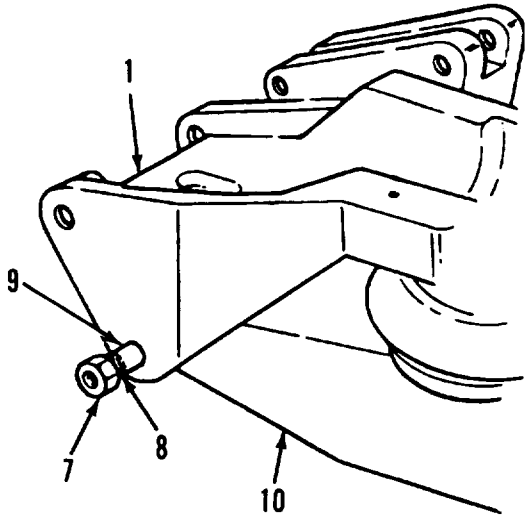

3. Starting on either side of threaded rod (8), add fabricated spacer (9) and install locknut (7). Turn locknut (7) against fabricated spacers (9) to pull threaded rod (8) through mounting bracket (1) and front yoke (1O). Remove locknuts (7) and add additional fabricated spacers (9) as necessary until threaded rod (8) is completely removed from mounting bracket (1). Discard threaded rod and locknuts.

4. Remove tube spacer (13) from mounting bracket (1).

5. Remove two flat washers (12) between mounting bracket (1) and front yoke (10).

6. Remove two sleeve bearings (11) from mounting bracket (1). Discard sleeve bearings.

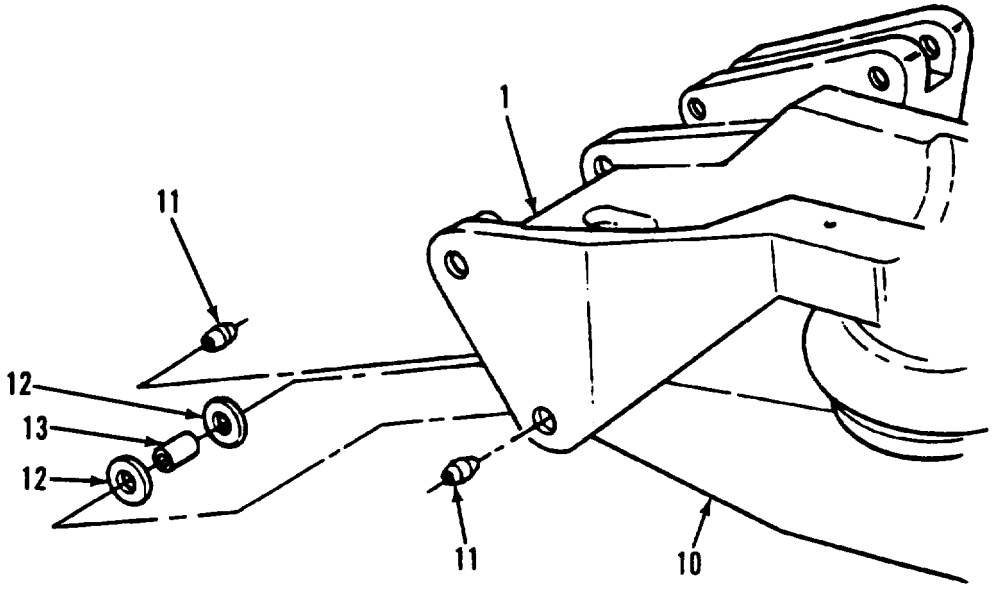

4-68. REAR AXLE YOKE AND MOUNTING BRACKET MAINTENANCE (M832 SN J089-001 THRU 159 AND J017-160 THRU 350 ONLY) (Con't).

b. INSPECTION

Inspect mounting bracket, rear yoke, trunnion bearings, suspension bar, stabilizer bar, and all other removed parts for excessive wear, tears, breaks, cracks, and bends. Replace damaged hardware.

c. INSTALLATION

1. Install two new sleeve bearings (11) in mounting bracket (1).

2. Position two flat washers (12) between mounting bracket (1) and front yoke (10).

3. Position tube spacer (13) on mounting bracket (1) and front yoke (10).

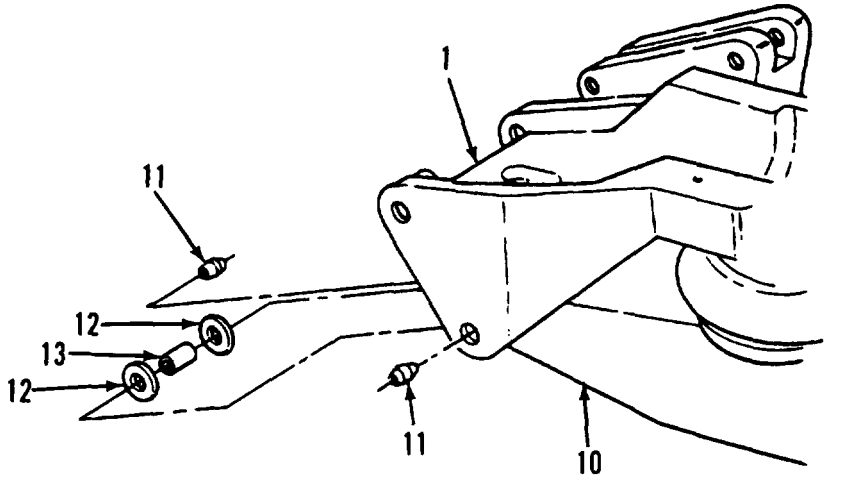

4. Install new threaded rod (8) through mounting bracket (1) and front yoke (10), ensuring proper alinement.

5. Install two flat washers (6) and new locknuts (7) on ends of threaded rod (8). Make sure equal amounts of thread are exposed on each end of threaded rod (8) after tightening locknuts (7).

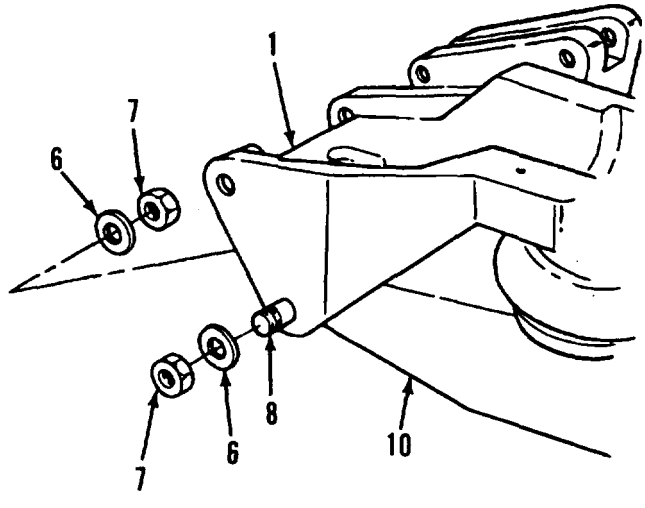

4-68. REAR AXLE YOKE AND MOUNTING BRACKET MAINTENANCE (M832 SN J089-001 THRU 159 AND J017-160 THRU 350 ONLY) (Con't).

6. Install clamp (5), new lockwasher (4), and screw (3) on mounting bracket (1) to secure air hose (2) in position.

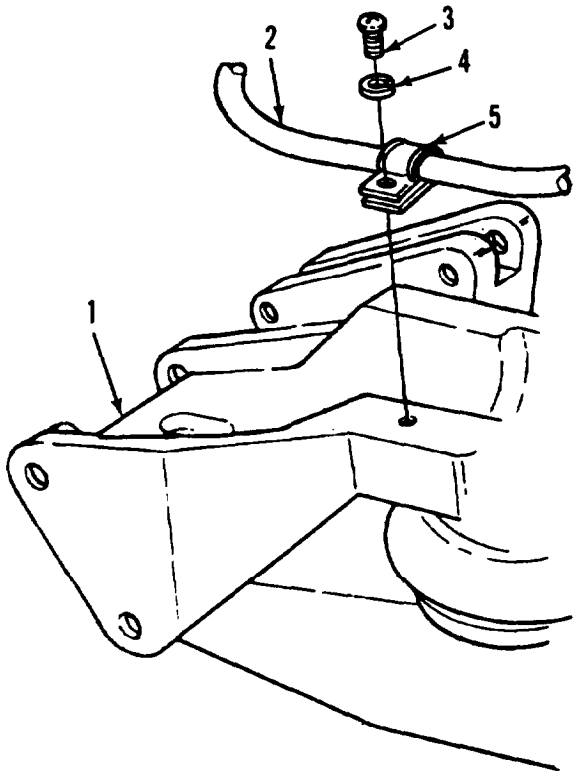

FOLLOW-ON TASKS:

- Install composite stoplight-taillight and bracket (para 4-24).
- Install data plates (para 4-73).
- Install trunnion caps (para 4-34).
- Install air spring (para 4-60).
- Install shock absorber (para 4-61).
- Install hydraulic cylinder (pars 4-86).
- Install strut (pare 4-58).
- Install rear suspension bar (para 4-63).
- Install branched wiring harness (para 4-25).
- Install rear distribution box (para 4-21).
- Install connecting link (para 4-65).
- Install rear stabilizer bar (para 4-66).

4-69. FRONT AXLE YOKE AND MOUNTING BRACKET MAINTENANCE (M832 SN J089-001 THRU 159 AND J017-160 THRU 350 ONLY).

This *Task Covers:*

a. Removal
b. Inspection
c. installation

Initial Setup:

Equipment Conditions:

- Front stabilizer bar removed (pars 4-67).
- Connecting link removed (right) (para 4-65).
- Front suspension bar removed (para 4-64).
- Strut removed (pare 4-58).
- Hydraulic cylinder removed (para 4-86).
- Shock absorber removed (pars 4-61).
- Air spring removed (pare 4-60).
- Trunnion caps removed (pars 4-27).
- Data plates removed (pars 4-73).

Tools/Test Equipment:

- General mechanic's tool kit
- Common no. 1 shop set
- Fabricated steel spacers (Appendix G)

Materials/Parts:

- One lockwasher
- Two locknuts
- One threaded rod
- Two bracket bushings

Personnel Required: Two

a. REMOVAL

NOTE

- Right and left mounting brackets and yokes are similar; right side is shown.
- Left mounting bracket does not have air hose attached. If performing maintenance on left mounting bracket, skip step 1.

1. Remove screw (2), lockwasher (l), and clamp (3) securing air hose (5) to right mounting bracket (4). Reposition air hose (5) away from mounting bracket (4). Discard lockwasher.

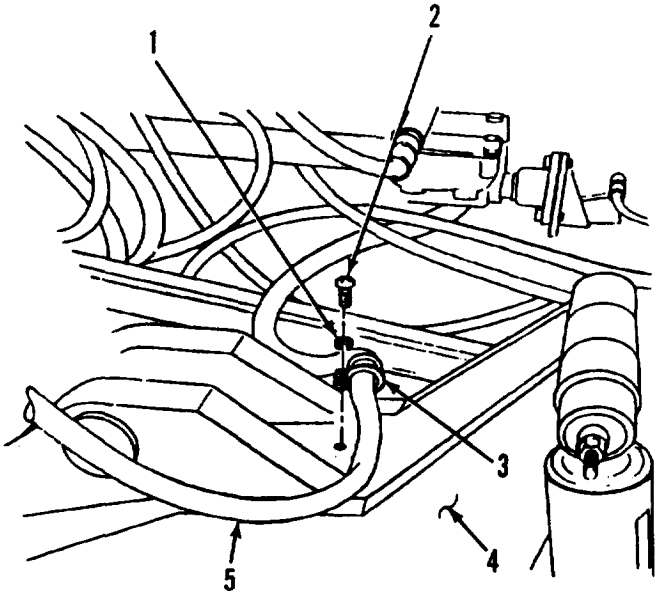

4-69 FRONT AXLE YOKE AND MOUNTING BRACKET MAINTENANCE (M832 SN J089-001 THRU 159 AND J017-160 THRU 350 ONLY (Con't).

2. Remove two locknuts (8) and flat washers (7) from both ends of threaded rod (6). Retain locknuts.

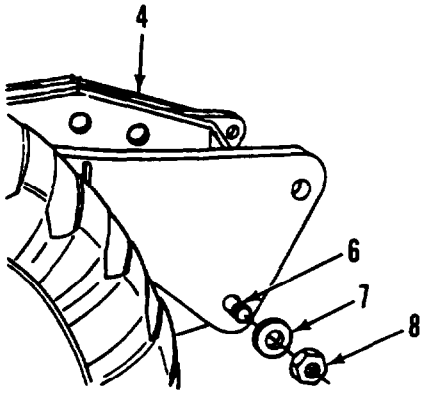

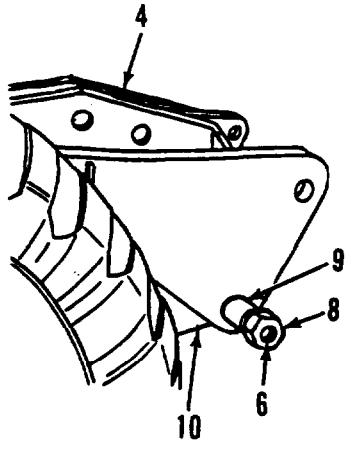

3. Starting on either side of threaded rod (6), add fabricated spacer (9) and install locknut (8). Turn locknut (8) against fabricated spacers (9) to pull threaded rod (6) through mounting bracket (4) and front yoke (10). Add additional fabricated spacers (9) as necessary until threaded rod (6) is completely removed from mounting bracket (4) and front yoke (10). Discard threaded rod and locknut.

4. Remove tube spacer (13) from mounting bracket (4).

5. Remove two flat washers (12) between mounting bracket (4) and front yoke (10).

6. Remove two bracket bushings (11) from mounting bracket (4). Discard bracket bushings.

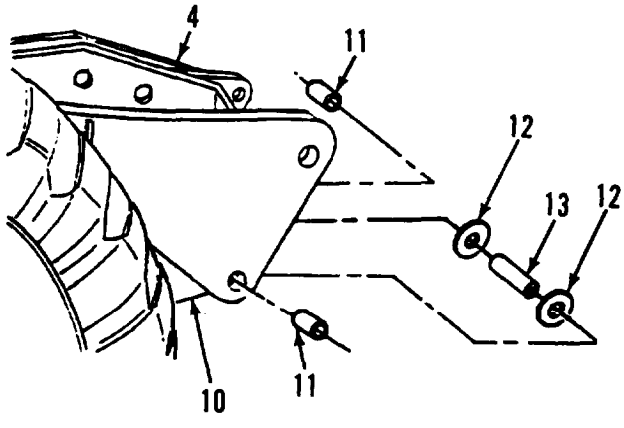

b. INSPECTION

inspect mounting bracket, front yoke, trunnion bearings, suspension bar, stabilizer bar, and all other removed parts for excessive wear, tears, breaks, cracks, and bends. Replace damaged hardware.

c. INSTALLATION

1. Install two new bracket bushings (11) in mounting bracket (4).

2. Position two flat washers (12) between mounting bracket (4) and front yoke (10).

3. Position tube spacer (13) on mounting bracket (4).

4-69. FRONT AXLE YOKE AND MOUNTING BRACKET MAINTENANCE (M832 SN J089-001 THRU 159 AND J017-160 THRU 350 ONLY) (Con't).

4. Install threaded rod (6) through mounting bracket (4) and front yoke (10), ensuring proper alinement.

5. install two flat washers (7) and new locknuts (8) on threaded rod (6). Make sure equal amounts of thread are exposed on threaded rod (6) after tightening locknuts.

NOTE

If performing maintenance on the left mounting bracket skip step 6.

6. Install clamp (3), new lockwasher (1), and screw (2) on right mounting bracket (4) to secure air hose (5) in position.

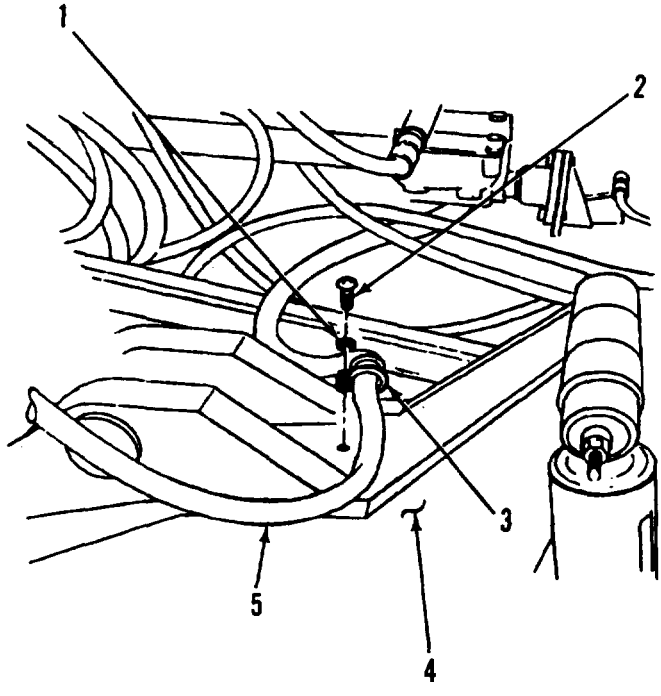

FOLLOW-ON TASKS:

- Install data plates (para 4-73).
- Install trunnion caps para 4-27).
- Install air spring (para 4-60).
- Install shock absorber (pare 4-61).
- Install hydraulic cylinder (para 4-86).
- Install strut (para 4-58).
- Install front suspension bar para 4-64.
- Install connecting link (para 4-65).
- Install front stabilizer bar (para 4-67).

4-70. CASTER ASSEMBLY REPAIR (M832 SN J089-001 THRU 159 AND J017-160 THRU 350 ONLY).

This *Task* Covers:

a. Disassembly
b. Cleaning and Inspection
c. Assembly

Initial Setup:

Equipment Condition

- Dolly parked on level surface with hand-brakes applied (para 2-2).
- Dolly caster assembly removed from vehicle (para 2-10).

Materials/Parts:

- Dry cleaning solvent (Item 14, Append&E)
- Six lockwashers
- One preformed packing

Tools/Test Equipment:

General mechanic's tool kit

NOTE

Only the M832 (SN J089-001 thru 159 and J017-160 thru 350) has dolly caster assemblies.

a. DISASSEMBLY

1. Remove four screws (11), eight washers (10), and four lockwashers (9) and nuts (8) from caster wheel (7), and remsve caster wheel (7) from caster mount (4). Discard lockwashers.

2. Remove two screws (6) and lockwashers (5) securing bearing insert (2) to caster mount (4), and remove bearing insert (2). Discard lockwashers.

3. Remove screw (13) and lanyard (14) from caster bracket (1).

4. Remove grease fitting (12) from bearing insert (2).

5. Remove bearing insert (2) from caster bracket (1).

6. Remove preformed packing (3) from bearing insert (2). Discard preformed packing.

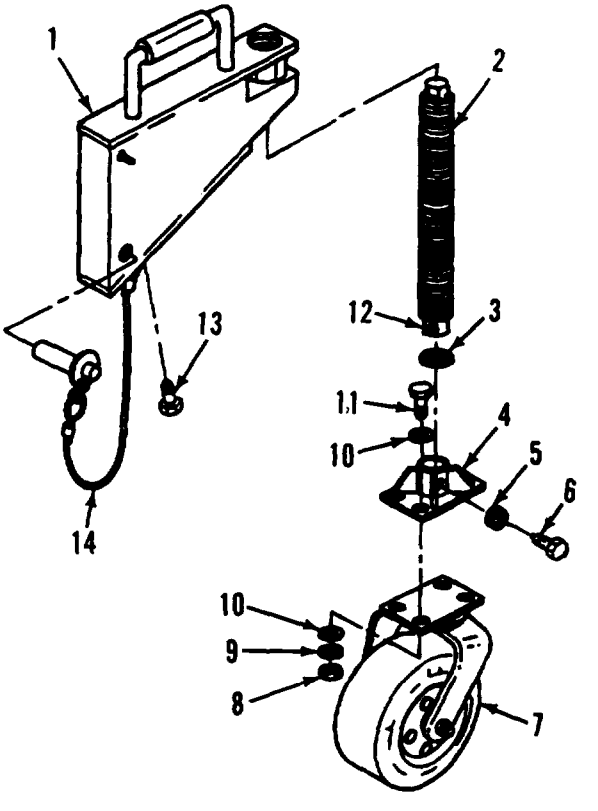

4-70. CASTER ASSEMBLY REPAIR (M832 SN J089-001 THRU 159 AND J017-160 THRU 350 ONLY) (Con't).

b. CLEANING AND INSPECTION

WARNING

• Dry cleaning solvent, P-D-680, is toxic and flammable. Always wear protective goggles and gloves, and use only in a well-ventilated area. Avoid contact with skin, eyes, and clothes, and DO NOT breathe vapors. DO NOT use near open flame or ●xcessive heat The solvent's flashpoint is 100°F-138°F (38°C-59°C). If you become dizzy while using dry cleaning solvent, immediately get fresh air and medical help. If solvent *contacts* your eyes, immediately wash them and get medical aid.

. Compressed air used for cleaning or drying purposes, or for clearing restrictions, should never exceed 30 psi (207 kPa). Wear protective clothing (goggles/shield, gloves, etc.) and use caution to avoid injury to personnel.

1. Clean ail metal components with dry cleaning solvent. Dry components with compressed air.

2. Inspect all parts for damage. Replace any damaged parts.

c. ASSEMBLY

1. Place bearing insert (2) in caster bracket (1).

2. Install grease fitting (12) in bearing insert (2).

3. Position lanyard (14) on caster bracket (1) and secure with screw (13).

4. Install new preformed packing (3) on end of bearing insert (2). Place bearing insert (2) in caster mount (4) and secure with two screws (6) and new lockwashers (5).

5. With four screws (11), eight washers (10), and four new lockwashers (9) and nuts (8), install caster wheel (7) on caster mount (4).

FOLLOW-ON TASKS:

l Install dolly caster assembly on vehicle (pars 2-10).

4-71. STEERING STOP ADJUSTMENT (M832 SN J089-001 THRU 159 AND J017-160 THRU 350 ONLY).

This *Task Covers* Adjustment

Initial Setup:

Equipment Conditions:

- Dolly set parked on level surface with handbrakes applied (para 2-2).

NOTE

Only the M832 (SN J089-001 thru 159 and J017-160 thru 350) has steering stops.

1. Loosen jam nut (3) on steering stop bolt (4) on left side of axle (1).
2. Adjust bolt (4) until top of bolt head is 1-15/16 in. (49.21 mm) from outer edge of steering stop block (2).
3. Tighten jam nut (3) on steering stop block (2).
4. Repeat steps 1 thru 3 for right steering stop.

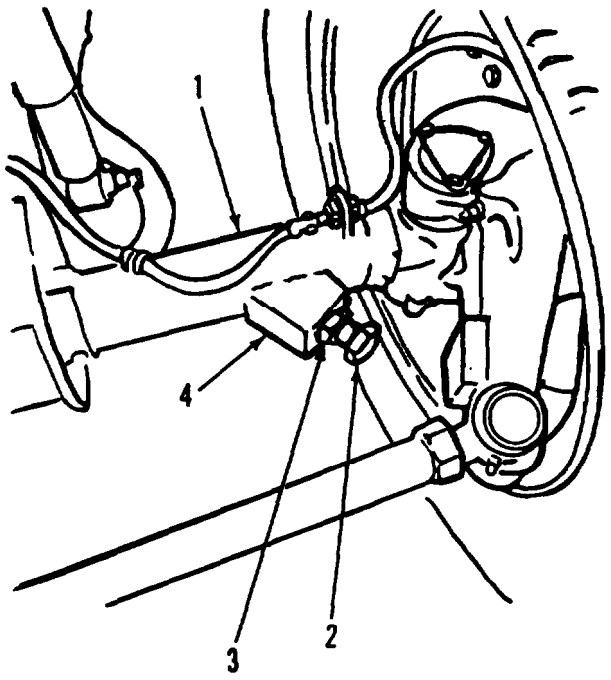

Section XIII. ACCESSORY ITEMS MAINTENANCE

Paragraph Title	Page Number
Adhesive Label and Pump Instruction Plate Replacement	4-194
Data Plate Replacement	4-192
Reflector Replacement	4-191

4-72. REFLECTOR REPLACEMENT.

This Task Covers:

a. Removal

b. Installation

Initial Setup:

Tools/Test Equipment:

- General mechanic's tool kit

Materials/Parts:

- Two lockwashers

a. REMOVAL

Remove two screws (1) and lockwashers (2) and reflector (3) from suspension bar (4). Discard lockwashers.

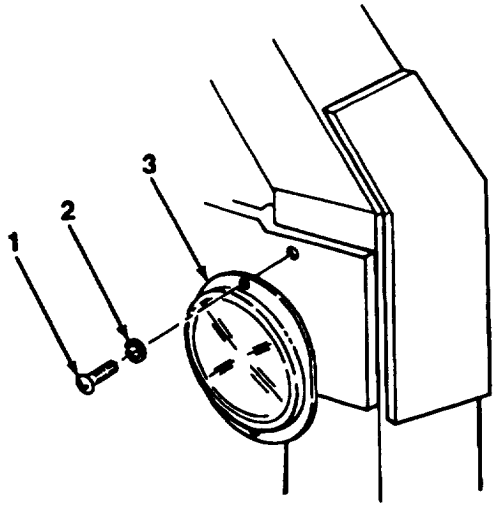

b. INSTALLATION

Install reflector (3) on suspension bar (4) with two new lockwashers (2) and screws (1).

4-73. DATA PLATE REPLACEMENT.

This *Task Covers:*

a. Removal

b. Installation

Initial Setup:

Equipment Conditions

l Dolly set parked on level surface with handbrakes applied (pars 2-2).

Tools/Test Equipment

- Auto shop equipment
- General mechanic's tool kit

Materials/Parts:

- Blind rivets (as required)
- Lockwashers (as required)
- Machine screws (as required)

a. REMOVAL

NOTE

On the M832 (SN J089-001 thru 159 and J017-160 thru 350), coupling and uncoupling instruction plates are secured with rivets. If removing either of these plates, perform step 1 only.

1. Chisel heads off rivets (4) and use drive pin punch to remove rivets (4) from holes. Remove data plate (1) from dolly set. Discard rivets.

2. Drill out machine screws (2) and remove lockwashers (3), if any, and data plate (1) from dolly set. Discard machine screws and lockwashers.

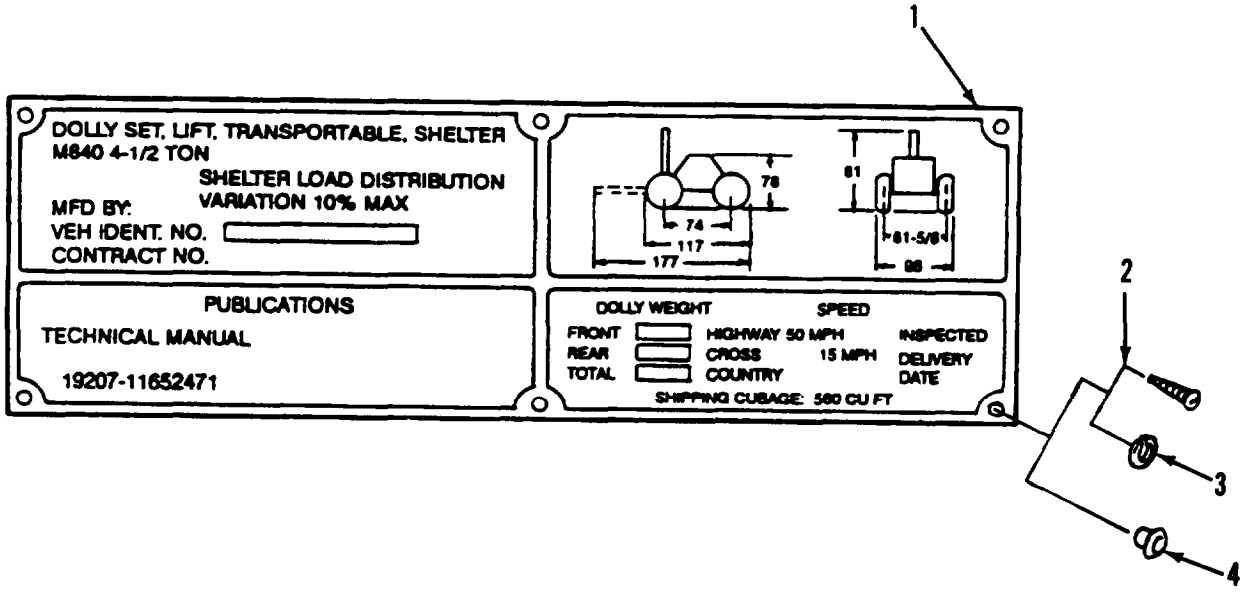

4-73. DATA PLATE REPLACEMENT (Con't).

b. INSTALLATION

NOTE

On the M332 (SN J089-001 thru 159 and J017-160 thru 350), coupling and uncoupling instruction plates are secured with rivets. If installing either of these plates, perform step 1 only.

1. Position new data plate (1) on dolly and install new rivets (4).

NOTE

If drive screw holes are enlarged too much to securely hold new drive screws, drill new holes near original holes using data plate as template.

2. Install data plate (1) on dolly with new machine screws (2) and new lockwashers (3), if any lockwashers were removed.

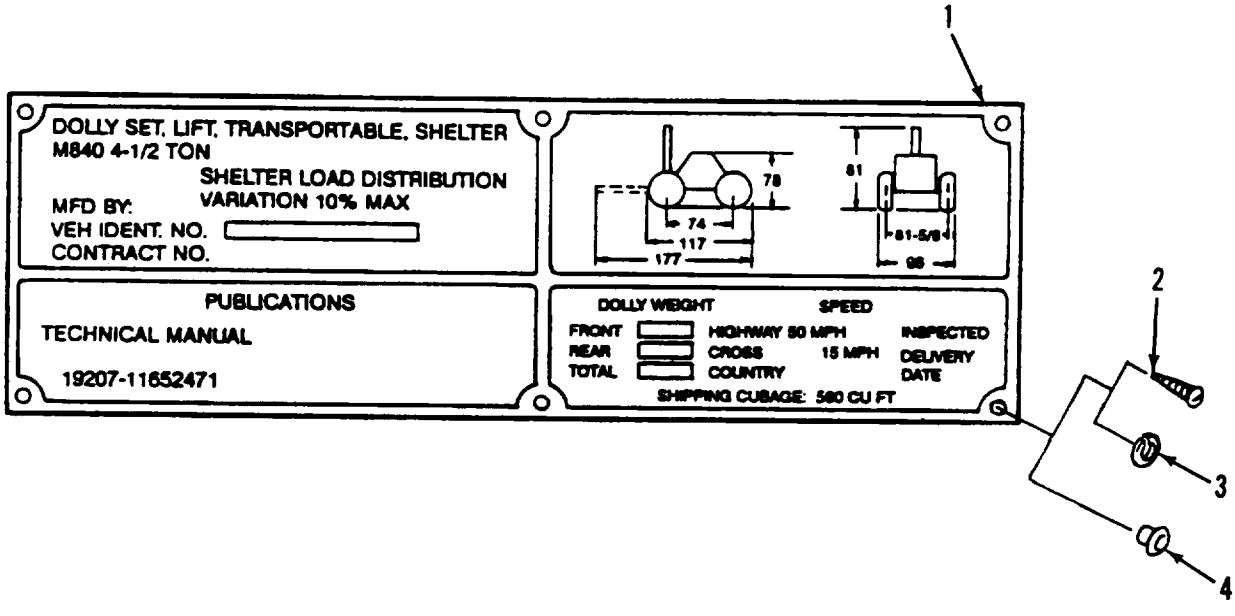

4-74. ADHESIVE LABEL AND PUMP INSTRUCTION PLATE REPLACEMENT.

This Task Covers:

a. Removal

b. Installation

Initial Setup:

Equipment Conditions:

- Dolly sat parked on level surface with hand-brakes applied (pars 2-2).
- Dolly sat uncoupled from towing vehicle (para 2-16).

Materials/Parts:

- Adhesive (Item 2, Appendix E)
- Dry cleaning solvent (Item 14, Appendix E)

Tools/Test Equipment:

- General mechanic's tool kit

NOTE

Only the M832 (SN J089-001 thru 159 and J017-160 thru 350 only) has self-adhesive drawbar labels.

a. REMOVAL

1. Scrape off label(s) (3, 4, or 6) from drawbar (5). Pry off instruction plate (1) from hydraulic pump (2).

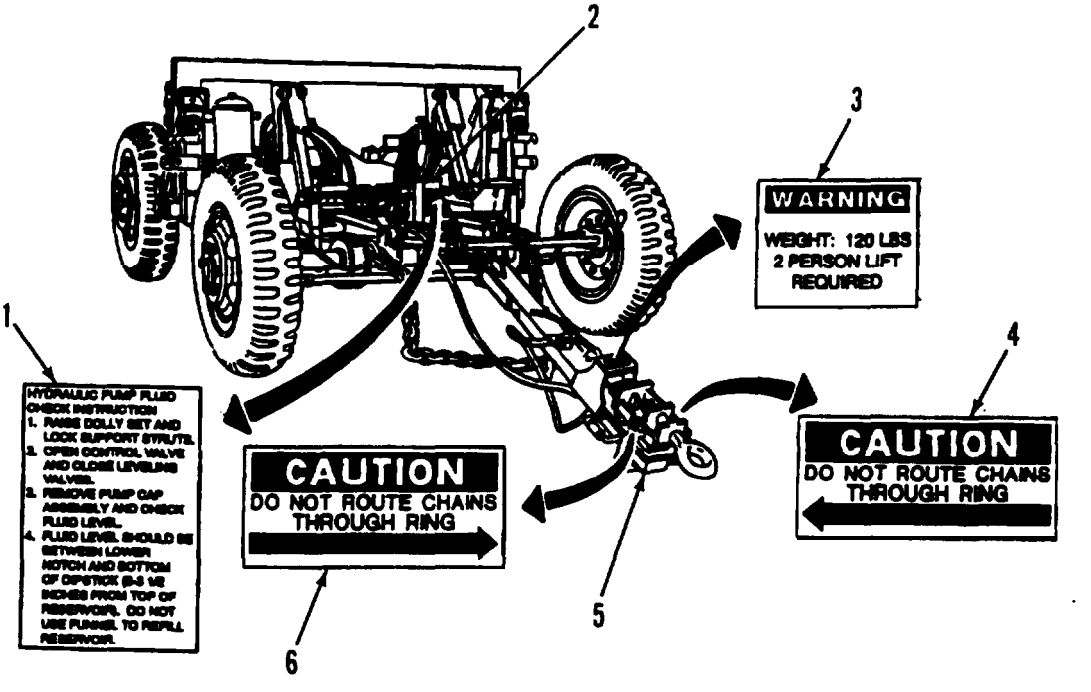

4-74. ADHESIVE LABEL AND PUMP INSTRUCTION PLATE REPLACEMENT (Con't).

WARNING

Dry cleaning solvent, P-D-680, is toxic and flammable. Always wear protective goggles and gloves, and use only In a well-ventilated area. Avoid contact with skin, eyes, and clothes, and DO NOT breathe vapors. DO NOT use near open flame or excessive heat. The solvent's flashpoint is 100°F-138°F (38°C-59°C). If you become dizzy while using dry cleaning solvent immediately get fresh air and medical help. If solvent contacts your eyes, immediately wash them and get medical aid.

2. Use dry cleaning solvent to remove any adhesive residue.

NOTE

If installing a self-adhesive label, skip step 1.

b. INSTALLATION

WARNING

Adhesive causes immediate bonding on contact with eyes, *skin, or* clothing and also gives off harmful vapors. Wear protective goggles, and use adhesive in a well-ventilated area. If adhesive gets in your eyes, try to keep them open, flush them with water for 15 minutes, and get medical attention. Adhesives and sealing compounds can bum easily and can give off harmful vapor. To avoid injury, keep adhesives and sealing compounds away from open firs and use them in a well-ventilated area.

1. Use adhesive to install instruction plate (1) on hydraulic pump (2).

2. Peel backing from label(s) (3, 4, or 6), and install label(s) on drawbar (5).

Section XIV. HYDRAULIC AND FLUID SYSTEMS MAINTENANCE.

Paragraph Title	Page Number
Hydraulic Cylinder Boot Replacement (M832 SN J089-001 thru 159 and J017-160 thru 350 Only)	4-241
Hydraulic Cylinder Replacement (M832 and M840)	4-236
Hydraulic Hoses and Fittings Replacement (M832 Except SN J089-001 thru 159 and J017-160 thru 350)	4-223
Hydraulic Hoses and Fittings Replacement (M832 SN J089-001 thru 159 and J017-160 thru 350 Only)	4-228
Hydraulic Hoses and Fittings Replacement (M840)	4-234
Hydraulic Pump Overload Valve Adjustment (M832 Except SN J089-001 thru 159 and J017-160 thru 350)	4-204
Hydraulic Pump Overload Valve Adjustment (M832 SN J089-001 thru 159 and J017-160 thru 350 Only)	4-213
Hydraulic Pump Repair (M832 Except SN J089-001 thru 159 and J017-160 thru 350)	4-200
Hydraulic Pump Repair (M832 SN J089-001 thru 159 and J017-160 thru 350 Only)	4-210
Hydraulic Pump Repair (M840)	4-218
Hydraulic Pump Replacement (M832 Except SN J089-001 thru 159 and J017-160 thru 350)	4-196
Hydraulic Pump Replacement (M832 SN J089-001 thru 159 and J017-160 thru 350 Only)	4-206
Hydraulic Pump Replacement (M840)	4-216

4-75. HYDRAULIC PUMP REPLACEMENT (M832 EXCEPT SN J089-001 THRU 159 AND J017-160 THRU 350).

This Task Covers:

a. Removal
b. Installation
c. Bleeding Hydraulic System

Initial Setup:

Tools/Test Equipment:

- General mechanic's tool kit
- Common no. 1 shop set

Materials/Parts:

- Hydraulic fluid (Item 6, Appendix E)
- Rags (Item 11, Appendix E)
- Six lockwashers

a. REMOVAL

1. Rotate release valve handle (8) counterclockwise to RELEASE position.

2. Close lifting-leveling jack valve (11) at each hydraulic cylinder (9).

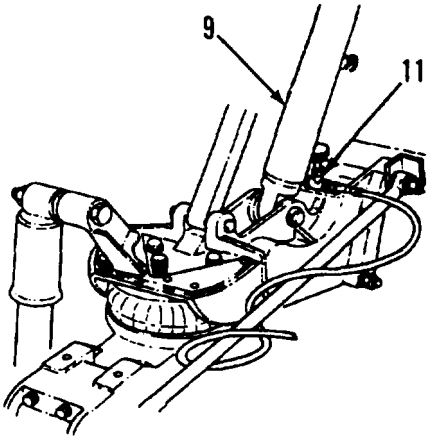

4-75. HYDRAULIC PUMP REPLACEMENT (M832 EXCEPT SN J089-001 THRU 159 AND J017-160 THRU 350) (Con't).

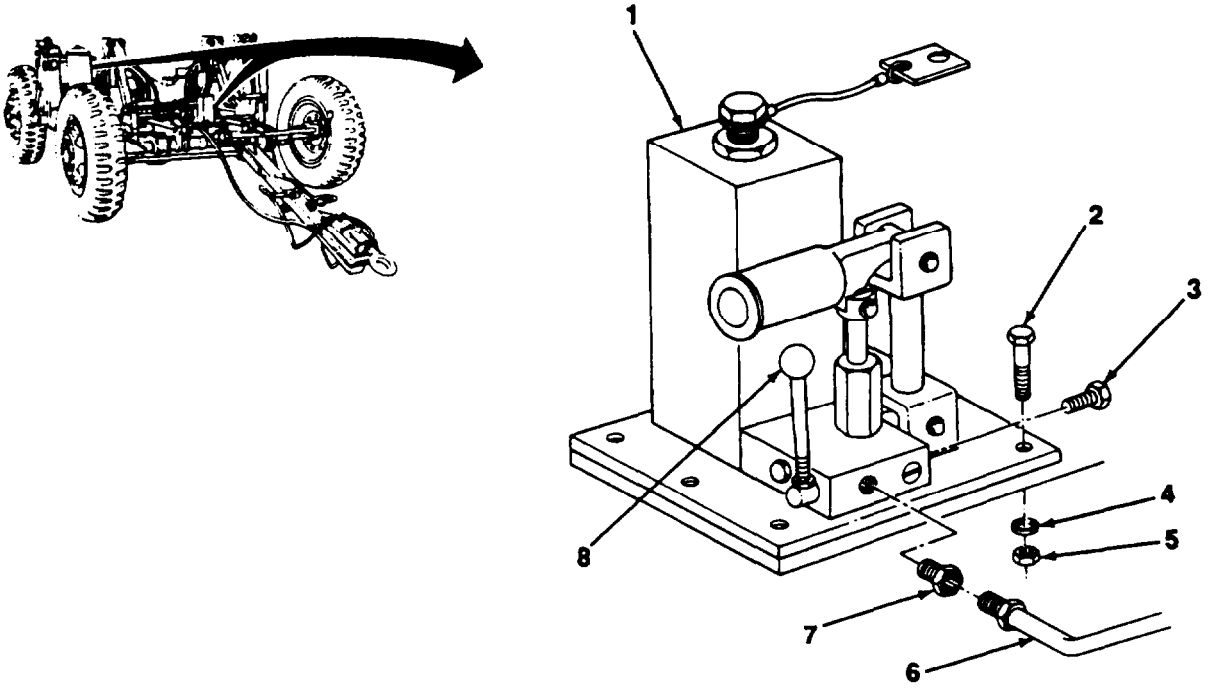

3. Remove drain plug (3) from hydraulic pump (1) and drain hydraulic fluid. Install drain plug.
4. Disconnect hydraulic line (6) from bushing (7) and remove bushing from hydraulic pump (1).
5. Remove six nuts (5), lockwashers (4), and bolts (2) from hydraulic pump (1) and remove hydraulic pump from dolly. Discard lockwashers.

b. INSTALLATION

1. Install hydraulic pump (1) to dolly with six bolts (2), new lockwashers (4), and nuts (5).
2. Install bushing (7) and connect hydraulic line (6) to hydraulic pump (1).

c. BLEEDING HYDRAULIC SYSTEM

1. Fill hydraulic pump (1) reservoir with hydraulic fluid (Chapter 3, Section 1).
2. Rotate pump valve release valve handle (8) clockwise to PUMP position.
3. Ensure that lifting-leveling jack valve (11) at each hydraulic cylinder (9) is closed.
4. Open lifting-leveling jack valve (11) at one hydraulic cylinder (9).

4-75. HYDRAULIC PUMP REPLACEMENT (M832 EXCEPT SN J089-001 THRU 159 AND J017-160 THRU 350) (Con't).

NOTE

Bleeder valve should be opened just enough to allow air and some hydraulic fluid to be expelled.

5. Open bleeder valve (10) on same hydraulic cylinder (9).

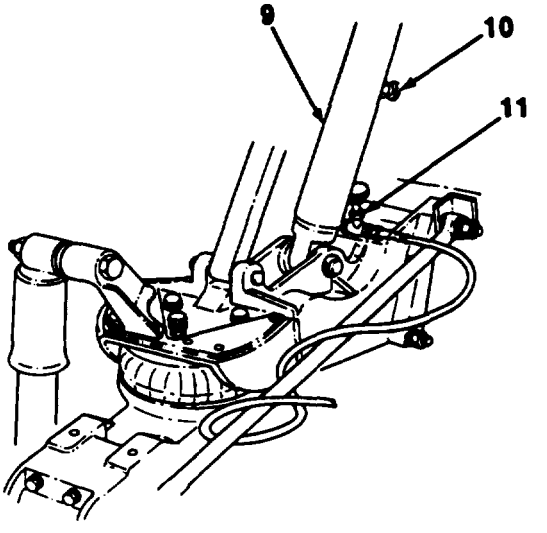

6. Pump hydraulic pump (1) slowly until air bubbles are expelled and hydraulic fluid is clear

7. Close bleeder valve (10) and lifting-leveling jack valve (11).

NOTE

Add hydraulic flui to hydraulic pump l s necessary.

8. Repeat steps 4 through 7 to bleed other hydraulic cylinder (9).

9. Leave operating handle (special wrench) of hydraulic pump (1) in downward position and again fill hydraulic pump With hydraulic fluid.

4-75. HYDRAULIC PUMP REPLACEMENT (M832 EXCEPT SN J089-001 THRU 159 AND J017-160 THRU 350) (Con't).

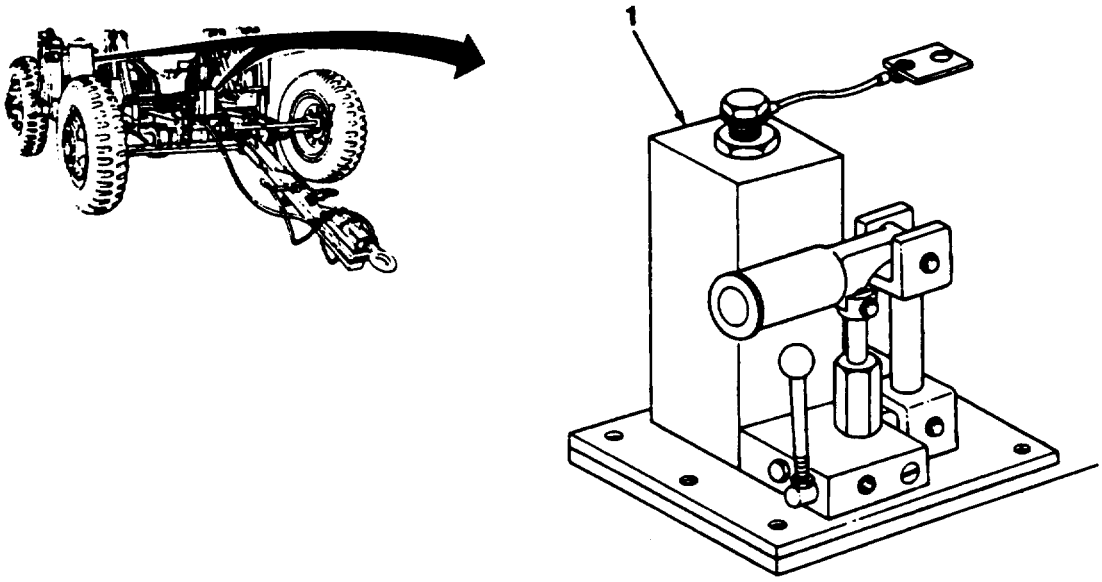

4-76. HYDRAULIC PUMP REPAIR (M832 EXCEPT SN J089-001 THRU 159 AND J017-160 THRU 350).

This Task Covers:

a. Disassembly
b. Cleaning and Inspection
c. Assembly

Initial Setup:

Equipment Conditions:

- Hydraulic pump removed and placed on workbench (para 4-75).

Tools/Test Equipment:

- General mechanic's tool kit

Materials/Parts:

- Hydraulic fluid (Item 6, Appendix E)
- Rags Item 11, Appendix E)
- Dry cleaning solvent (Item 14, Appendix E)
- One packing
- One preformed packing
- One rubber bushing

a. DISASSEMBLY

1. Remove two link pin assemblies (12) and link (11) from hydraulic pump (20) and lever (3).
2. Remove link pin assembly (4) and lever (3) from piston (5).
3. Remove piston (5), barrel (6), packing (7), spring (8), sleeve (9), and preformed packing (10) from hydraulic pump (20). Discard packing and preformed packing.
4. Loosen nut (18) and remove stud (17) and nut from release valve (16).
5. Remove release valve (16), ball (15), and rubber bushing (14). Discard rubber bushing.

NOTE

Note position of components In steps 6 and 7 for assembly.

6. Remove six components of overload valve (19).
7. Remove SIX components of pump valve (13) from hydraulic pump (20).
8. Remove cap assembly (2) and bushing (1).

b. CLEANING AND INSPECTION

WARNING

Dry cleaning solvent, P-D-680, Is toxic and flammable. Always wear protective goggles l nd gloves, l nd use only in a well-ventilated are.. Avoid contact with akin, eyes, and clothes, and DO NOT breathe vapors. DO NOT use near open flame or exceesive heat The solvent's flash point Is 100°F-138°F (38°C-59°C). If you become dizzy while using cleaning solvent, Immediately get fresh air and medical help. If solvent contacts eyes, immediately wash your eyes and get medical aid.

1. Clean all metal components with dry cleaning solvent and wipe with clean, dry, lint-free rags.
2. Clean inside of hydraulic pump and reservoir by flushing with dry cleaning solvent.

4-76. HYDRAULIC PUMP REPAIR (M832 EXCEPT SN J089-001 THRU 159 AND J017-160 THRU 350) (Con't).

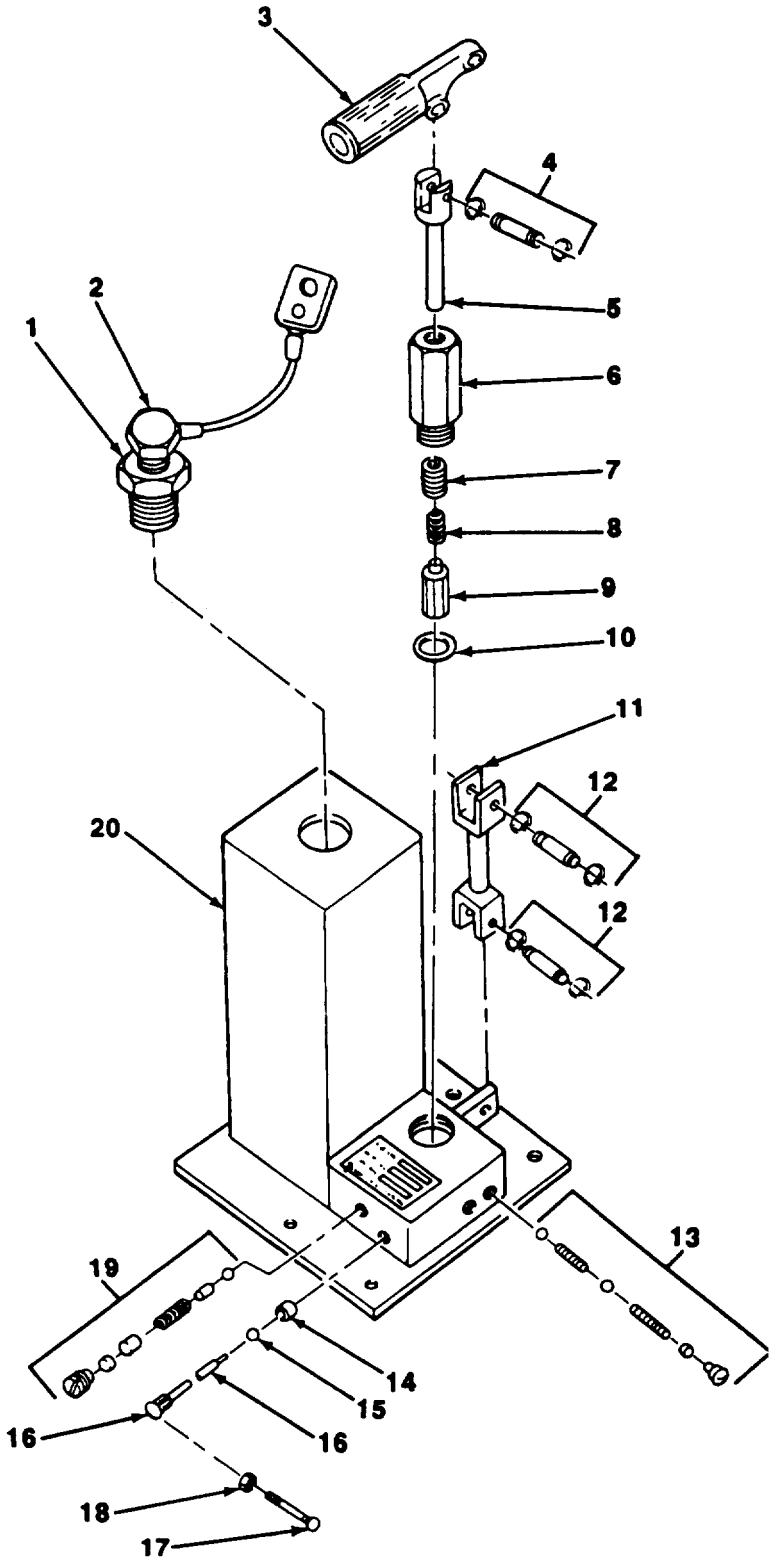

4-76. HYDRAULIC PUMP REPAIR (M832 EXCEPT SN J089-001 THRU 159 AND J017-160 THRU 350) (Con't).

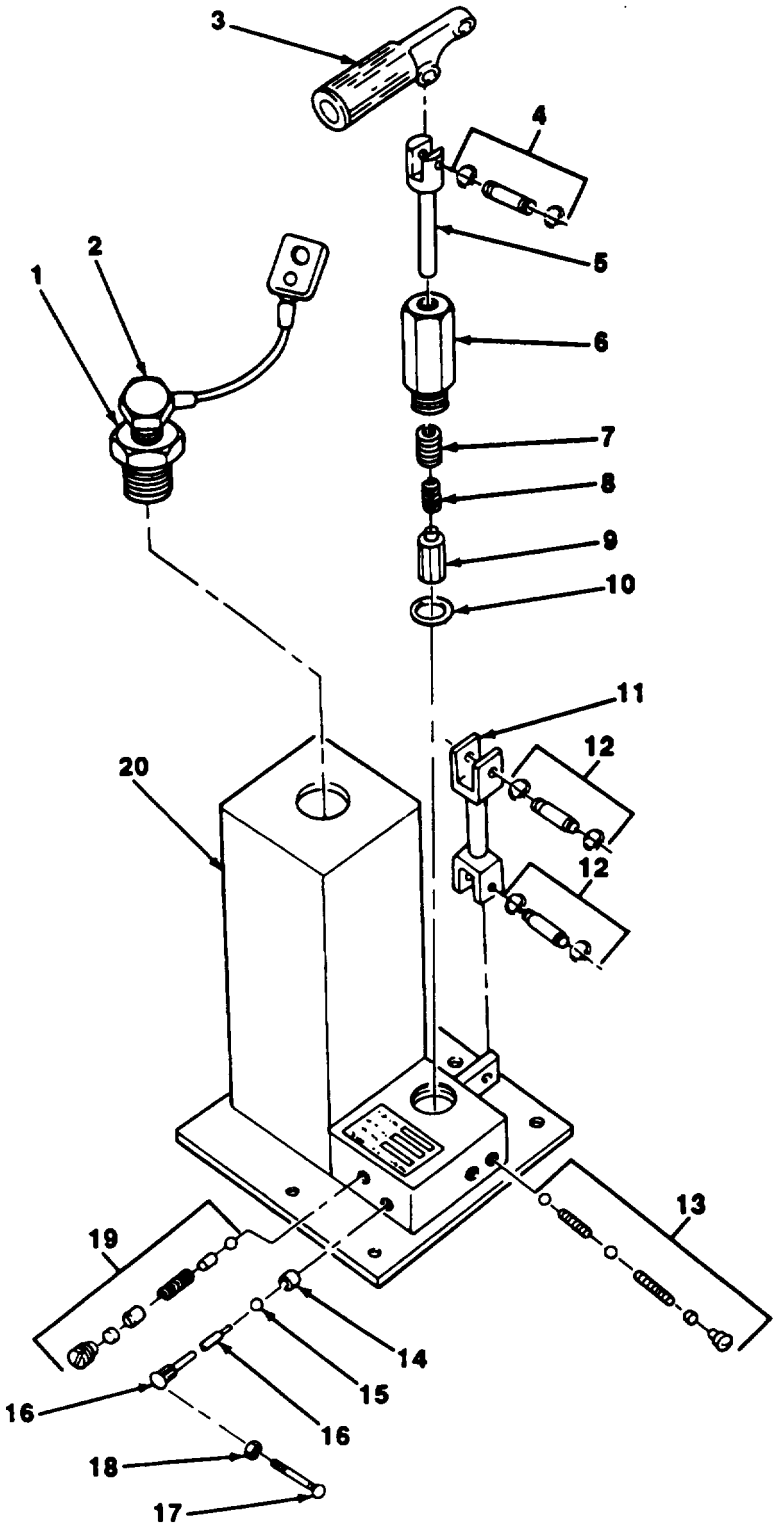

4-76. HYDRAULIC PUMP REPAIR (M832 EXCEPT SN J089-001 THRU 159 AND J017-160 THRU 350) (Con't).

3. Inspect components for damage and wear. Replace damaged or worn parts.

   Apply clean hydraulic fluid to suface of all components and Interior of hydraulic pump.

c. ASSEMBLY

1. Install six components of pump valve (13) to hydraulic pump (20).
2. Install six components of overload valve (19).
3. Install new rubber bushing (14), ball (15), and release valve (16).
4. Install nut (18) and stud (17) to release valve (18). Tighten nut.
5. Install new performed packing (10), sleeve (9), spring (8), new packing (7), barrel (8), and piston (5) to hydraulic pump (20).
6. Install lever (3) to piston (5) with link pin assembly (4).
7. Install link (11) to hydraulic pump (20) and level (3) with two link pin assemblies (12).
8. Install bushing (1) and cap assembly (2).

FOLLOW-ON TASKS:

- Install hydraulic pump (para 4-75).
- Adjust hydraulic pump overload valve (para 4-77).

4-77. HYDRAULIC PUMP OVERLOAD VALVE ADJUSTMENT (M832 EXCEPT SN J089-001 THRU 159 AND J017-160 THRU 350).

This Task Covers: Adjustment

Initial Setup:

Equipment Conditions:

- Dolly set parked on level surface with handbrakes applied (para 2-2).
- Dolly set uncoupled from towing vehicle (pare 2-16).

Tools/Test Equipment:

- Common no. 1 shop set

ADJUSTMENT

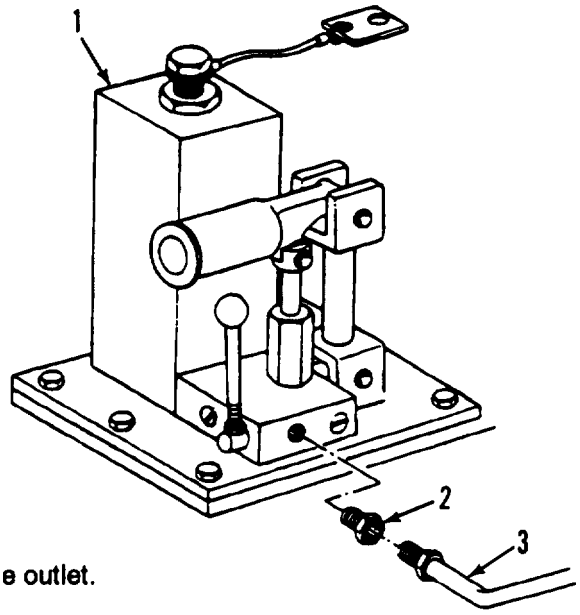

1. Remove hydraulic line (3) from pipe bushing (2) in hydraulic pump(1) pressure outlet.

2. Remove bushing (2) from hydraulic pump (1) pressure outlet.

3. Install pipe bushing (5) in hydraulic pump (1) pressure outlet.

4. Install hydraulic test gage (4) in pipe bushing (5).

NOTE

Make sure pipe bushing and test gage connections do not leek.

5. Check hydraulic fluid level in hydraulic pump reservoir (pars 3-2).

6. Operate pump piston lever (9) while reading pressure on test gage(4). Pressure should read 3000psi (20,685 kPa) + 100 psi (689 kPa) prior to opening of overload valve.

NOTE

- When the overload valve releases pressure, the gage pressure reading will drop off immediately.

- If overload valve does not release pressure at 3000 psi (20,666 kPa) + 100 psi (669 kPa), adjust overload valve.

4-77. HYDRAULIC PUMP OVERLOAD VALVE ADJUSTMENT (M832 EXCEPT SN J089-001 THRU 159 AND J017-160 THRU 350).

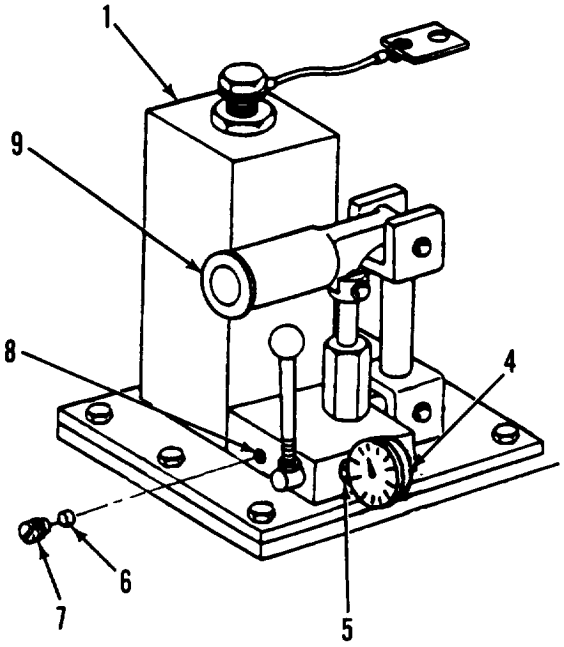

7. Remove overload valve seal (6) and overload plug (7) from hydraulic pump (1), Discard seal.

8. Turn overlaod valvb ve screw (8) (clockwise to increase pressure and counterclockwise to decrease pressure) until 3000 psi (20,685) kPa) + 100 psi (689 kPa) breaking pressure is obtainad.

NOTE

If overload valve will not adjust properly, notify Direct Support maintenance.

9. Install overload plug (7) and new seal (6) in hydraulic pump (1).

10. Remove test gage (4) and pipe bushing (5) from hydraulic pump (1) pressure outlet.

11. Install bushing (2) in hydraulic pump(1) pressure outlet.

12. Install hydraulic line (3) in bushing (2).

FOLLOW-ON TASKS:

- Check hydraulic fluid level (para 3-2).

4-78. HYDRAULIC PUMP REPLACEMENT (M832 SN J089-001 THRU 159 AND J017-160 THRU 350 ONLY).

This Task Covers:

a. Removal
b. Installation
c. Bleeding Hydraulic System

Inital Setup:

Equipment Conditions:

- Deify set parked on level surface with handbrakes applied (pars 2-2).
- Dolly set uncoupled from towing vehicle (para 2-16).

Tools/Test Equipment:

- General mechanic's tool kit

Materials/Parts:

- Hydraulic fluid (item 6, Appendix E)
- Sealing compound (item 12, Appendix E)
- Five lockwashers

Personnel Required: Two

a. REMOVAL

WARNING

- Hydraulic fluid pressure is extremely high when adjusting hydraulic pump. All safety precautions must be taken when performing this operation. Wear protective clothing and use hand and eye protection. Failure to follow this warning may result in injury or death to personnel.
- Make sure struts are locked. Faliure to follow this warning may result in injury to personnel.

NOTE

- Only the M832 (SN J089-001 thru 159 and J017-160 thru 350) has increased-capacity pumps.
- Replacement of front and rear hydraulic pumps is the same. Replacement of hydraulic pump on front dolly is shown.
- Use a suitable container to catch any fluid that may spill when disconnecting hydraulic lines.

1. Remove output tube (4) from tee (1) on valve bank and from bushing (3) on hydraulic pump (2). Remove bushing (3) from hydraulic pump (2).

4-78. HYDRAULIC PUMP REPLACEMENT (M832 SN J089-001 THRU 159 AND J017-160 THRU 350 ONLY) (Con't).

2. Remove hydraulic return tube (6) from elbow (5) on valve bank and from elbow (7) on filter (8).

3. Remove filter (8) from two elbows (7 and 9).

4. Remove bushing (10) and elbow (9) from hydraulic pump (2).

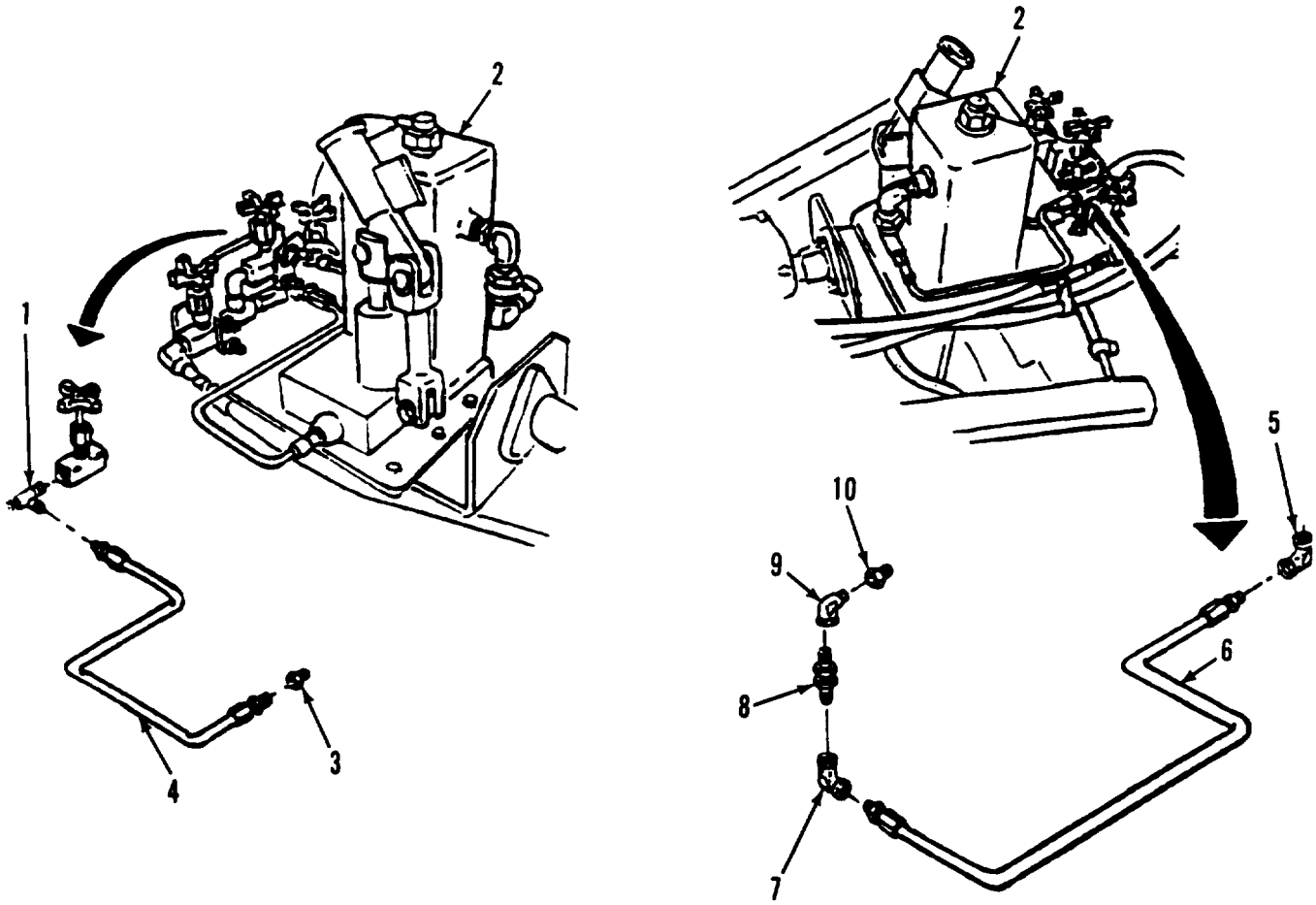

4-78. HYDRAULIC PUMP REPLACEMENT (M832 SN J089-001 THRU 159 AND J017-160 THRU 350 ONLY) (Con't).

5. Remove nut (13), Washer (12), and wire rope (11) from capscrew (17). Discard lockwasher.

6. Remove four capscrews (14) and lockwashers (15) from hydraulic pump (2). Discard lockwashers.

7. Remove hydraulic pump (2) from mounting bracket (16) and place on level surface.

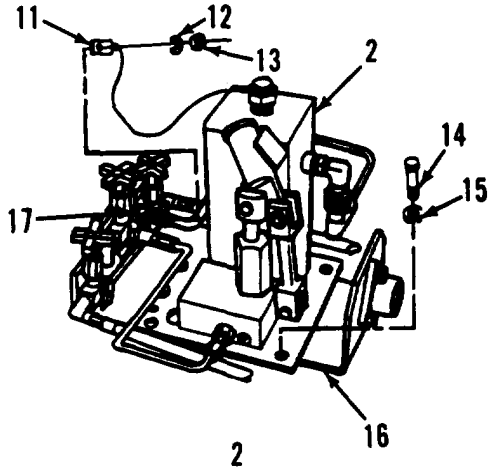

b. INSTALLATION

1. Position new hydraulic pump (2) on mounting bracket (16) and install four capscrews (14) and new lockwashers (15).

2. Install wire rope(11), new lockwasher(12), and nut (13) on capscrew(17) on valve bank.

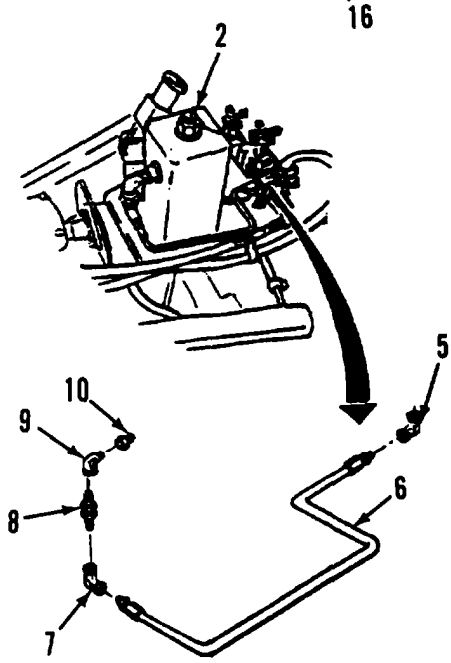

WARNING

Sealing compound can burn easily,can give off harmful vapors, and is harmful to skin and clothing. To avoid injury or death, keep sealing compound away from open fire and use in a well-ventilated area. If sealing compound gets on skin or clothing, wash immediately with soap and water.

NOTE

Apply sealing compound to all hydraulic threaded joints prior to installation.

3. Install bushing (10) and elbow (9) in hydraulic pump (2).

4. Install filter (8) in two elbows (7 and 9).

5. Install return tuba (6) on valve bank and elbow (7).

6. Install bushing (3) in hydraulic pump (2).

7. Install output tube (4) on bushing (3).

8. Install output tube (4) on tee (1) on valve bank.

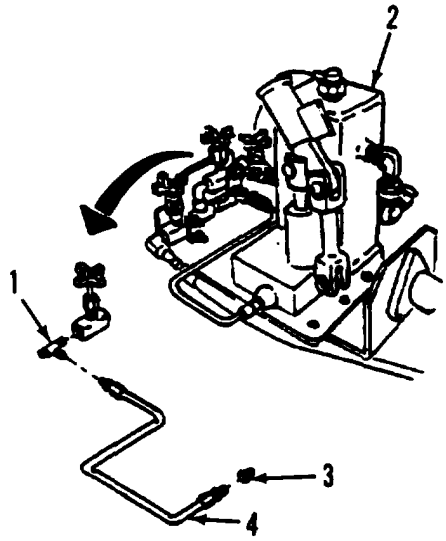

4-78. HYDRAULIC PUMP REPLACEMENT (M832 SN J089-001 THRU 159 AND J017-160 THRU 350 ONLY) (Con't).

9. Close control valve (18).

10. Fill hydraulic pump (para 3-2).

c. BLEEDING HYDRAULIC SYSTEM

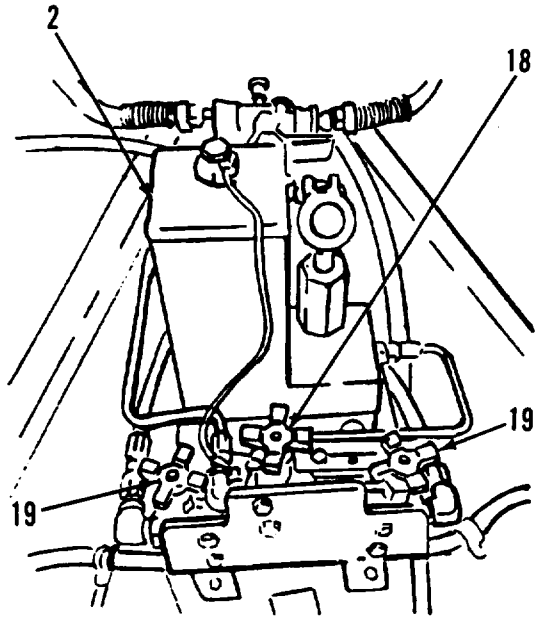

1. Fill hydraulic pump (2) reservoir with hydraulic fluid (para 3-2).

2. Rotate control valve (18) handle counterclockwise to open position.

3. Make sure leveling valve (19) for each of four hydraulic cylinders (20) is closed.

4. Open leveling valve (19) for one hydraulic cylinder (20).

NOTE

- Bleeder valve should be opened just enough to allow air and some hydraulic fluid to be expelled.
- Do not completely remove plug from cylinder.

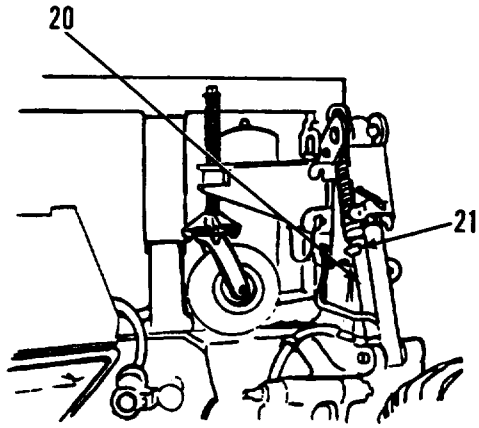

5. Loosen bleeder plug (21) on same hydraulic cylinder (20).

6. Pump hydraulic pump (2) slowly until air bubbles are no longer expelled and hydraulic fluid is clear.

7. Close bleeder valve (21) and leveling valve (19).

NOTE

Add hydraulic fluid to hydraulic pump as necessary (para 3-2).

8. Repeat steps 4 through 7 to bleed other hydraulic cylinder (20).

NOTE

Add hydraulic fluid to hydraulic pump as necessary (para 3-2).

4-79. HYDRAULIC PUMP REPAIR (M832 SN J089-001 THRU 159 AND J017-160 THRU 350 ONLY).

This Task Covers:

a. Disassembly
b. Cleaning and Inspection
c. Assembly

Initial Setup:

Equipment Conditions:

- Hydraulic pump removed and placed on workbench (para 4-78).

Tools/Test **Equipment:**

- General mechanic's tool kit

Materials/Parts:

- Dry cleaning solvent (Item 14, Appendix E)
- Hydraulic fluid (Item 6, Appendix E)
- Hydraulic parts kit

NOTE

This task is for the M832 SN J089-001 thru 159 and SN J017-150 thru 350 only.

a. DISASSEMBLY

1. Remove four snap rings (11) from two link pins (12). Remove link pins (12) and pump link (10) from hydraulic pump (13).

2. Remove two snap rings (2) from link pin (3) at manual control lever (1). Remove link pin (3) and manual control lever (1) from pump piston (4).

3. Remove pump piston (4), pump barrel (5), pump packing (6), spring (7), sleeve (8), and preformed packing (9) from hydraulic pump(13). Discard pump packing and preformed packing.

NOTE

Note position of components in steps 4 and 5 for assembly purposes.

4. Remove six components of overload valve (27) from pump (13) body by removing plug screw (26) and plug seal (25). Remove valve screw (24) from pump (13). Tip pump (13) forward to remove valve spring (23), valve plunger (22), and steel ball (21). Discard all six components.

5. Remove six components of pump valve (20) from pump (13) body by removing pump valve plug (19) and pump valve seal (18). Tilt pump (13) to remove small valve spring (15), large valve spring (17), small steel ball (14), and large steel ball (16). Discard all six components.

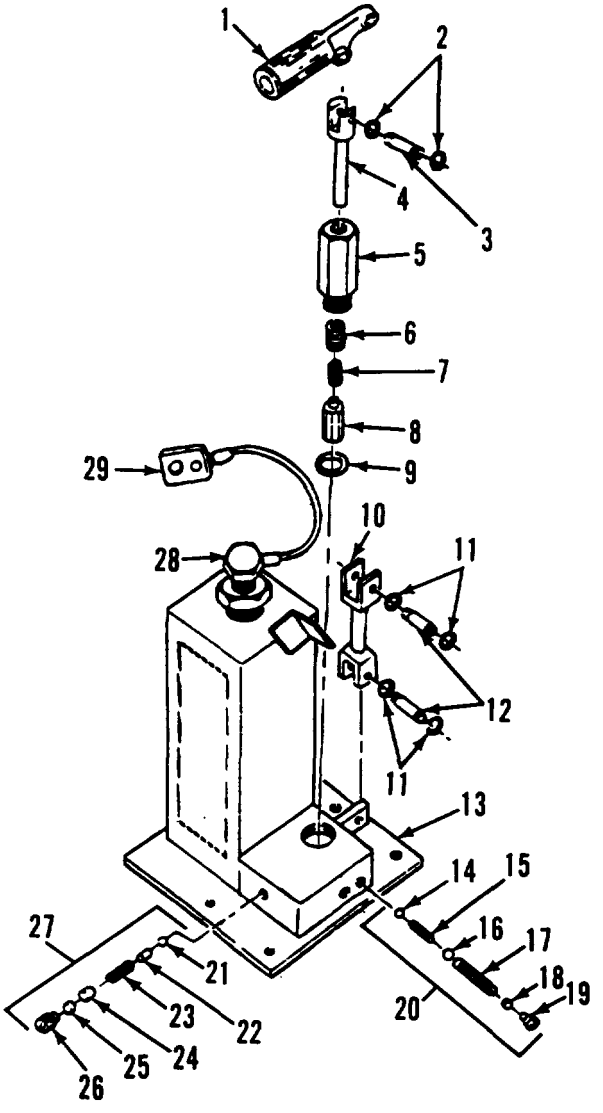

4-79. HYDRAULIC PUMP REPAIR (M832 SN J089-001 THRU 159 AND J017-160 THRU 350 ONLY) (Con't).

6. Remove cap assembly (29) and pipe bushing (28) from pump (13) and body.

b. CLEANING AND INSPECTION

WARNING

Dry cleaning solvent, P-D-680, is toxic and flammable. Always wear protective goggles and gloves, and use only in a well-ventilated area. Avoid contact with skin, ● yes, and clothes and DO NOT breath vapors. 00 NOT use near open flame or excessive heat. The solvent's flashpoint is 100°F-138°F (38°C-59°C). If you become dizzy while using dry cleaning solvent, Immediately get fresh air and medical help. If solvent contacts your eyes, Immediately flush them with water and get medical ski.

CAUTION

Make sure all rubber places have been removed from hydraulic jack assembly parts prior to cleaning with P-D-680. Rubber will absorb the solvent, causing swelling and deterioration of rubber components.

1. Clean all metal parts in dry cleaning solvent, wipe parts clean with clean, dry, lint-free cloth, and dry thoroughly.

WARNING

Compressed air used for cleaning or drying purposes, or for clearing restrictions, should never exceed 30 psi (207 kPa). Wear protective clothing (goggles/shield, gloves, etc.) and use caution to avoid injury to personnel.

2. Flush inside of hydraulic pump reservoir with dry cleaning solvent. Dry with compressed air.

3. Inspect all components for damage and wear. Replace worn or damaged parts.

4. Apply clean hydraulic fluid to surface of all components and to inside of hydraulic reservoir.

c. ASSEMBLY

CAUTION

Take cars not to stretch valve springs. Install all seals and packings with seal lips facing down toward the pressure. Dip each part in clean hydraulic oil before assembly.

NOTE

The hydraulic pump on the M832 (SN J089-001 thru 159 and J017-160 thru 350) does not have the release screw, release seal, and 5/16-inch diameter ball Included in the hydraulic pump repair kit. These items are to be returned to supply system.

4-79. HYDRAULIC PUMP REPAIR (M332 SN J039-001 THRU 159 AND J017-160 THRU 350 ONLY) (Con't).

1. Install components of pump valve (20) by replacing small steel ball (14), small valve spring (15), large steel ball (16), and large valve spring (17).

2. Install new valve seal (18) using inserting tool. Insert valve seal (18) into female portion of tool lip first. Use male end of tool to push valve seal (18) into pump (13). Install new pump valve plug (19) in pump (13).

3. Install components of overload valve (27) by replacing steel ball (21), valve plunger (22), valve spring (23), valve screw (24), plug seal (25), and valve plug (26).

4. Install components of pump assembly by replacing preformed packing (9), sleeve (8), pump spring (7), pump packing (6), and pump barrel (5). Open release valve to allow air to bleed from pump barrel (5) back into reservoir. Install pump piston (4) by inserting it into pump barrel (5).

5. Install manual control lever (1) by placing link pin (3) through pump piston (4) and lever (1) and attaching two snap rings (2) to link pin (3).

6. Install pump link (10) by placinglinkpin(12) through pump body to base of pump link (10) and attaching two snap rings (11)tolink pin(12). Install remaining link pin (12) through upper holes in pump link (10), through remaining hole in manual control lever (1), and attach two snap rings (11) to link pin (12).

7. Install pipe bushing (28) and cap assembly (29) on pump (13).

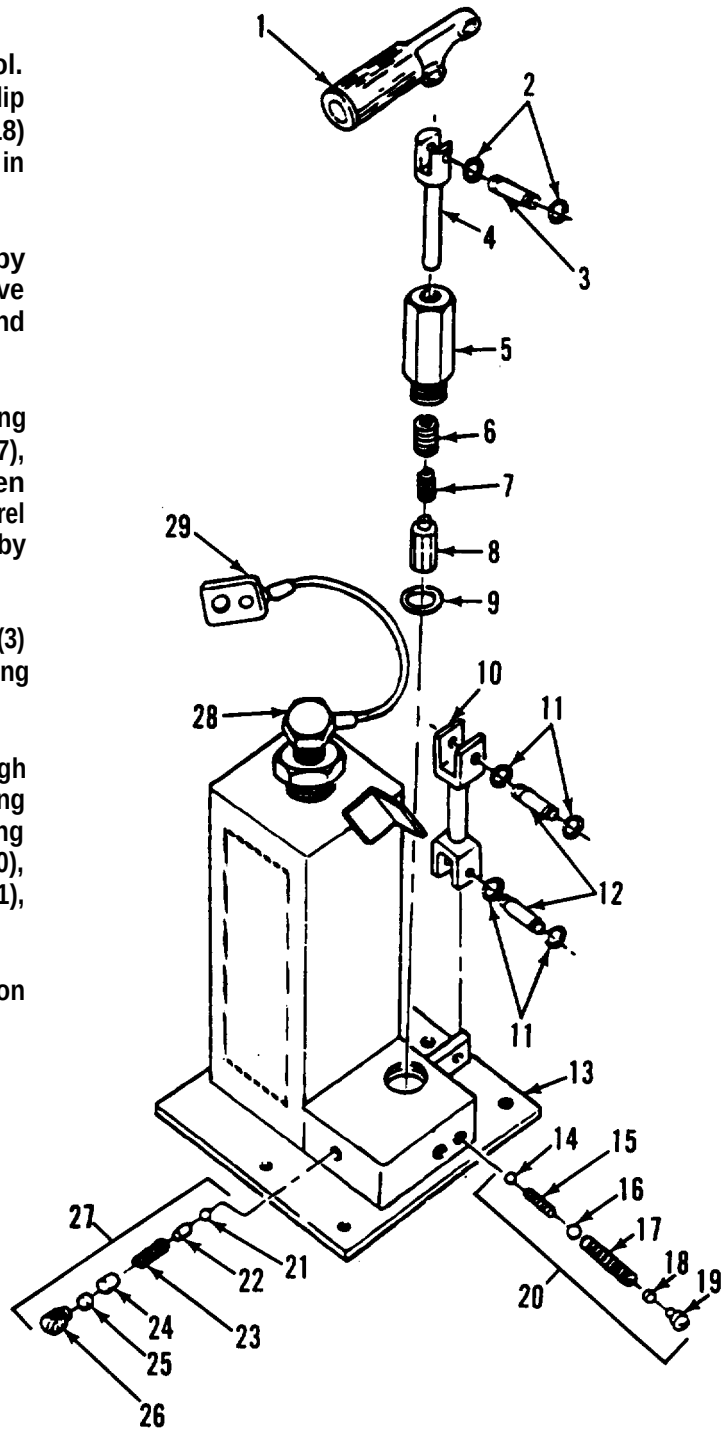

CAUTION

The pump must be filled and have overload release valve set before it can be reinstalled. Failure to follow this caution can result in damage to dolly sat hydraulic system.

FOLLOW-ON TASKS:

. Install hydraulic pump (para 4-78).
. Adjust hydraulic pump overload valve (para 4-80).

4-80. HYDRAULIC PUMP OVERLOAD VALVE ADJUSTMENT (M832 SN J089-001 THRU 159 AND J017-160 THRU 350 ONLY).

This Task Covers: Adjustment

Initial Setup:

Equipment Conditions:

- Dolly set parked on level ground with hand-brakes applied (para 2-2).
- Dolly set uncoupled from towing vehicle (para 2-16).

Tools/Test Equipment:

- Common no. 1 shop set
- Dial pressure gage
- Pipe bushing

Materials/Parts:

- Sealing compound (Item 12, Appendix E)

ADJUSTMENT

NOTE

- Only the M832 (SN J089-001 thru 159 and J017-160 thru 350) has adjustable hydraulic pumps.
- When serving hydraulic units, cleanliness is of the utmost importance. A clean environment and proper tools are necessary to ensure efficient and effective repair.

WARNING

Hydraulic fluid pressure is extremely high when adjusting hydraulic pump. All safety precautions must be taken when performing this operation. Wear protective clothing and use hand and eye protection. Failure to follow this warning may result in injury or death to personnel.

NOTE

Use a suitable container to catch any fluid that may spill when disconnecting hydraulic lines.

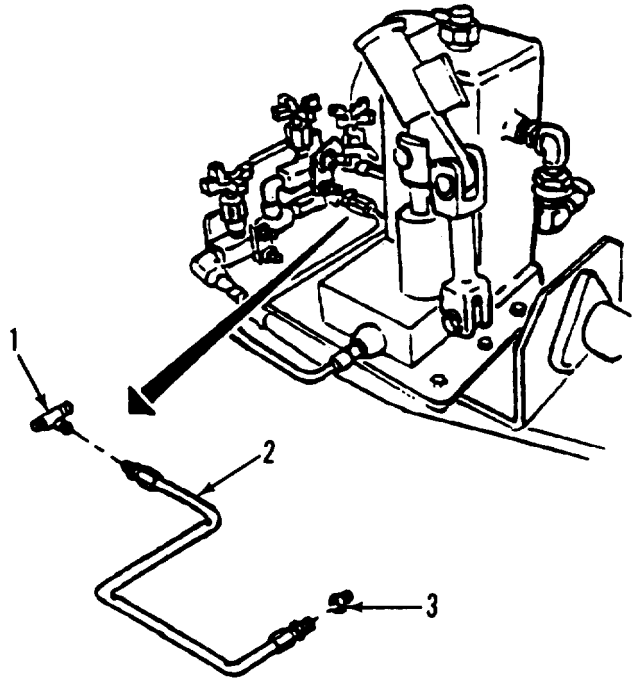

1. Remove output tube (2) from pipe bushing (3) in pump pressure outlet and tee (1).
2. Remove pipe bushing (3) from pump pressure outlet.

4-80. HYDRAULIC PUMP OVERLOAD VALVE ADJUSTMENT (M832 SN J089-001 THRU 159 AND J017-160 THRU 350 ONLY) (Con't)

3. Install pipe bushing (5) in hydraulic pump pressure outlet.

4. Install hydraulic test gage (6) in pipe bushing (5).

NOTE

Make sure pips bushing and test gage connations do not leak.

5. Check hydraulic fluid level in hydraulic pump reservoir (para 3-2).

6. Operate pump piston lever (4) while reading pressure on test gage (6). Pressure should read 5000 psi±100 psi (34,475 kPa ±689 kPa) prior to opening of overload valve.

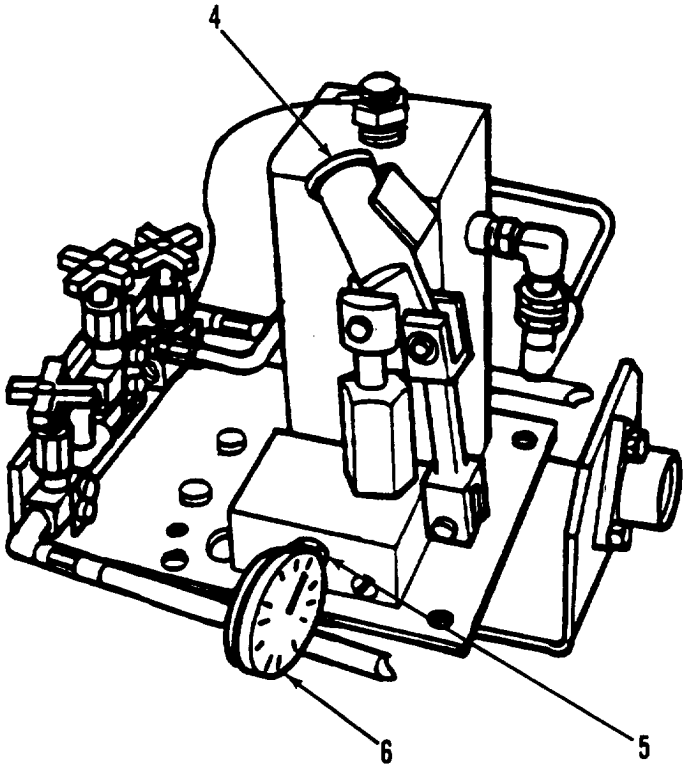

4-80. HYDRAULIC PUMP OVERLOAD VALVE ADJUSTMENT (M832 SN J089-001 THRU 159 AND J017-160 THRU 350 ONLY) (Con't).

NOTE

- When overload valve release pressure, gage pressure reading will drop off immediately.
- If overload valve doss not release pressure at 5000 psi±100 pal (34,475 kPa ±689 kpa), adjust overload valve.

7. Remove overload valve plug (8) and overload valve seal (7) from pump (10).

8. Turn overload valve screw (9) clockwise increase pressure and counterclockwise to decrease pressure until 5000 psi +100 psi (34,475 kPa ±689 kPa) breaking pressure is obtained.

NOTE

If overload valve will not adjust properly, notify Direct Support maintenance.

9. Install overload valve seal (7) and overload valve plug (8) in pump (10).

10. Slowly remove test gage (6) and pipe bushing (5) from pump (10), allowing fluid pressure to release gradually.

11. Install pipe bushing (3) in pump (10).

12. Install output tube (2) on pipe bushing (3) and tee (1).

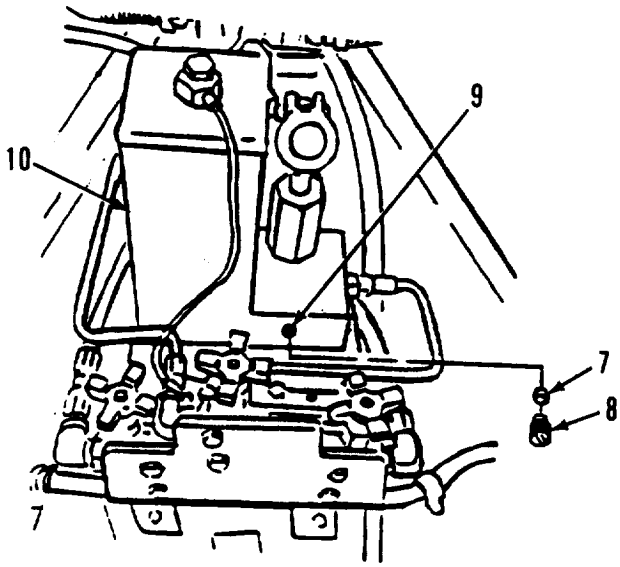

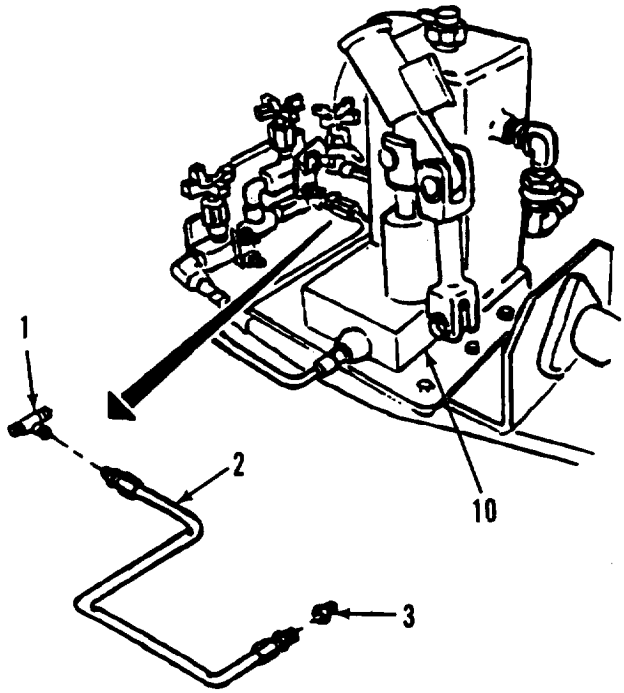

FOLLOW-ON TASKS:

- Check hydraulic fluid level (para 3-2).

4-81. HYDRAULIC PUMP REPLACEMENT (M840).

This Task Covers:

a. Removal

b. Installation

Initial Setup:

Tool/test Equipment:

- General mechanic's tool kit
- Common no. 1 shop set

Materials/Parts:

- Hydraulic fluid (Item 6, Appendix E)
- Rags (Item 11, Appendix E)
- Four lockwasher

a. REMOVAL

1. Rotate release valve handle (10) clockwise to PUMP position.
2. Disconnect two hydraulic hoses (1 and 3) from tee (2).
3. Remove tee (2), bushing (4), and adapter (5).
4. Remove four nuts (9), lockwashers (8), and screws (7) from hydraulic pump (6) and remove hydralic pump from dolly. Discard lockwashers.
5. Remove dipstick (11) and pour hydraulic fluid out of hydraulic pump (6). Install dipstick.

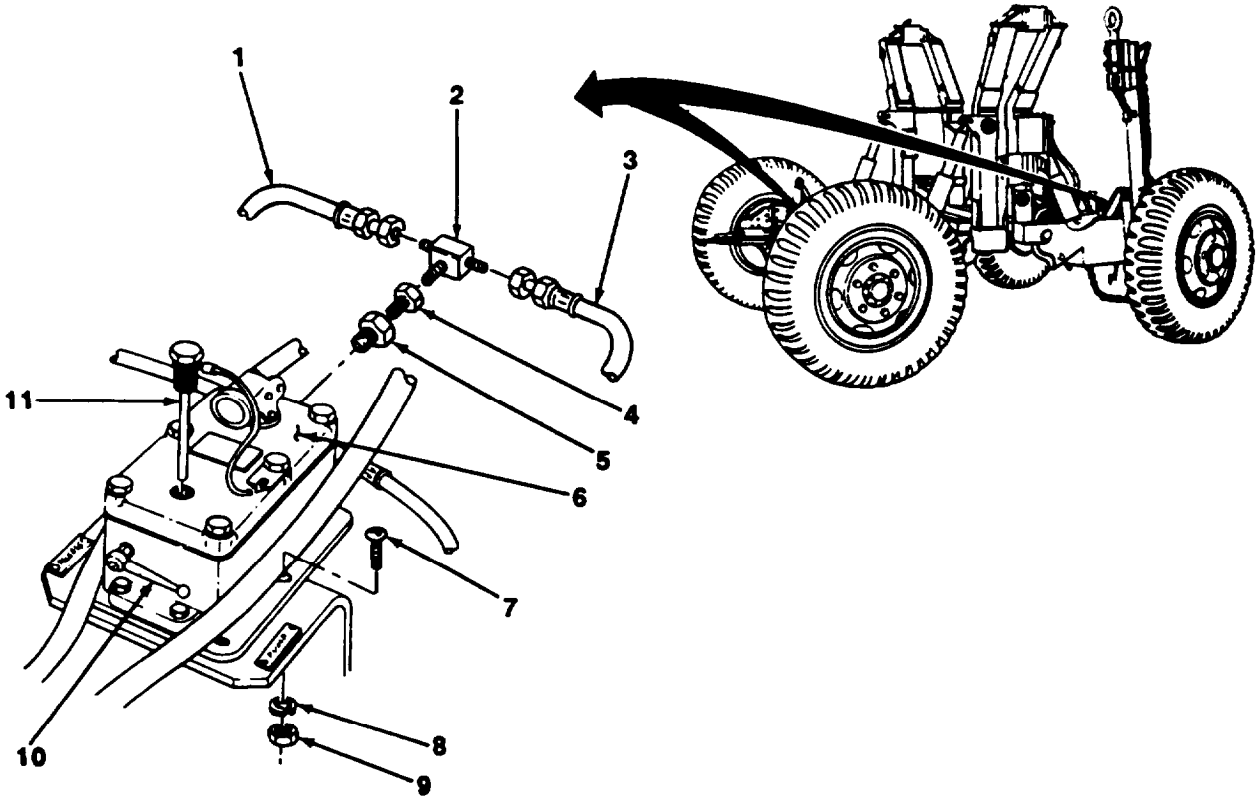

4-81. HYDRAULIC PUMP REPLACEMENT (M840) (Con't).

b. INSTALLATION

1. install hydraulic pump (6) to dolly with four straws (7), new lockwashers (8), and nuts (9).
2. Install adapter (5), bushing (4), and tee (2).
3. Connect two hydraulic hoses (1 and 3) to tea (2).
4. Bleed hydraulic system (para 4-75).

4-82. HYDRAULIC PUMP REPAIR (M840).

This Task Covers:

a. Disassembly
b. Cleaning and Inspection
c. Assembly
d. Adjustment

Initial Setup:

Equipment Conditions:

- Hydraulic pump removed (para 4-81).

Tools/Test Equipment:

- General mechanic's tool kit
- Common no. 1 shop set
- Hydraulic pressure gage

Materials/Parts:

- Hydraulic fluid (Item 6, Appendix E)
- Rags (item 11, Appendix E)
- Dry cleaning fluid (Item 14, Appendix E)
- One lockwasher
- One repair kit
- One spring pin
- Three packings

a. DISASSEMBLY

1. Remove two retaining rings (5), grooved pin (6), and beam (4) from top of hydraulic pump.
2. Remove spring pin (7) from beam (4). Discard spring pin.
3. If damaged or worn, remove pin (8) from beam (4). Discard pin.
4. Remove piston (1) and gasket (9). Discard piston and gasket.
5. if damaged, remove two screws (14) and plate (13) from cover (15).
6. Remove six bolts (2), cover (15), and gasket (16) from pump housing (27). Remove dipstick (3). Discard gasket.
7. Remove piston retaining nut (10), packing (11), and packing retainer (12) from cover (15). Discard packing and packing retainer.
8. Remove Cylinder (38) from pump housing (27).

NOTE

Not. position of steel balls for assembly.

9. Remove valve adjusting screw (22), packing (23), spring (24), ball bearing (25), and ball (26). Discard packing, spring, ball bearing, and ball.
10. Remove screw (29), lockwasher (30), and lever (31) from release valve (32). Discard lockwasher.
11. Remove valve spindle assembly (33), insert (34), and time packings (35) from pump housing (27). Discard packings.
12. Remove pin (28) and release valve (32) from valve spindle assembly (33).
13. Remove relief valve (20) and packing (21) from pump housing (27). Discard packing.
14. Remove valve adjusting plug (17), spring (18), and ball bearing (19) from relief valve (20).
15. Remove pipe plug (37) and screen (36) from pump housing (27).

4-82. HYDRAULIC PUMP REPAIR (M840) (Con't).

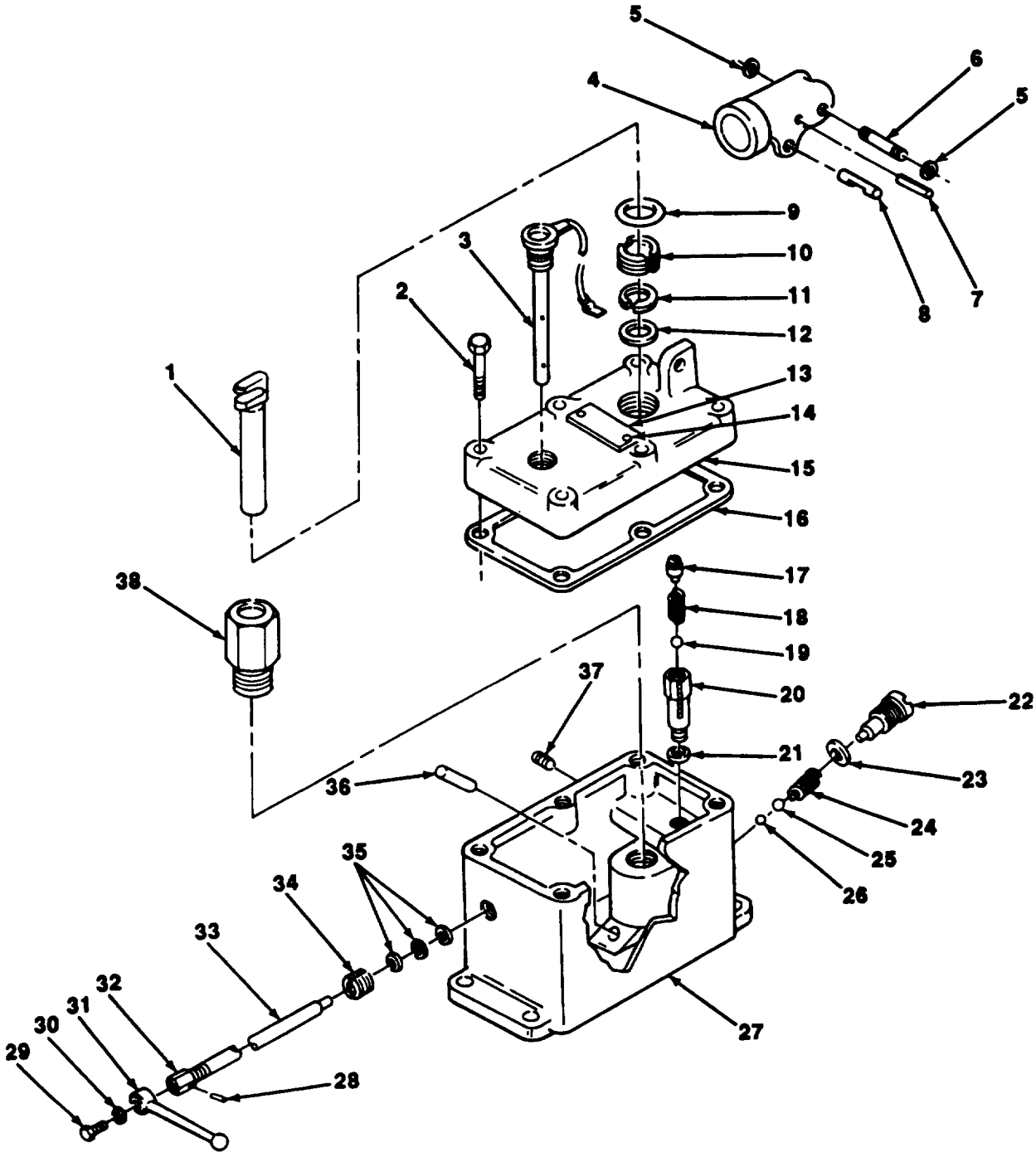

4-82. HYDRAULIC PUMP REPAIR (M840) (Con't).

b. CLEANING AND INSPECTION

WARNING

Dry cleaning solvent, P-D-680, is toxic and flammable. Always wear protective goggles and gloves, and use only in a well-ventilated area. Avoid contact with skin, eyes, and clothes, and DO NOT breathe vapors. DO NOT use near open flame or excessive heat. The solvent's flash point is 100°F-138°F (38°C-59°C). If you become dizzy while using cleaning solvent, immediately get fresh air and medical help. If solvent contacts eyes, immediately wash your eyes and get medical aid.

1. clean all metal components with dry cleaning solvent and wipe with clean, dry, lint-free rags.
2. clean inside of hydraulic pump and reservoir by flushing with dry Cleaning Solvent.
3. Inspect components for damage and wear. Replace damaged or wom parts.

   Apply clean hydraulic fluid to surface of all components and interior of pump housing.

c. ASSEMBLY

1. Install screen (36) and pipe plug (37) to pump housing (27).
2. Install ball bearing (19), spring (18), and valve adjusting plug (17) to relief valve (20).
3. Install new packing (21) and relief valve (20) to pump housing (27).
4. Install release valve (32) to valve spindle assemby (33) with pin (28).
5. Install three new packings (35), insert (34), and valve spindle assembly (33) to pump housing (27). Do not fully tighten insert.
6. Install lever (31) with end of lever facing PUMP position and Install new lockwasher(30) and screw (29). Tighten Insert (34).
7. Install new ball (26), new ball bearing (25), new spring (24), new packing (23), and valve adjusting screw (22).
8. Install cylinder (38) to pump housing (27').
9. Install new packing retainer (12), new packing(11) and piston retaining nut (10) to cover (15).
10. Loosely install new gasket (16) and cover (15) to pump housing (27) with six bolts (2). Install dipstick (3).
11. Install new gasket (9) and new piston (1).
12. install new spring pin (7) to beam (4).
13. If removed, Install new pin (8) to balm (4).
14. If removed, install plate (13) to cover (15) with two screws (14).
15. Install beam (4) to top of hydraulic pump with grooved pin (6) and two retaining rings (5).

4-82. HYDRAULIC PUMP REPAIR (M840) (Con't).

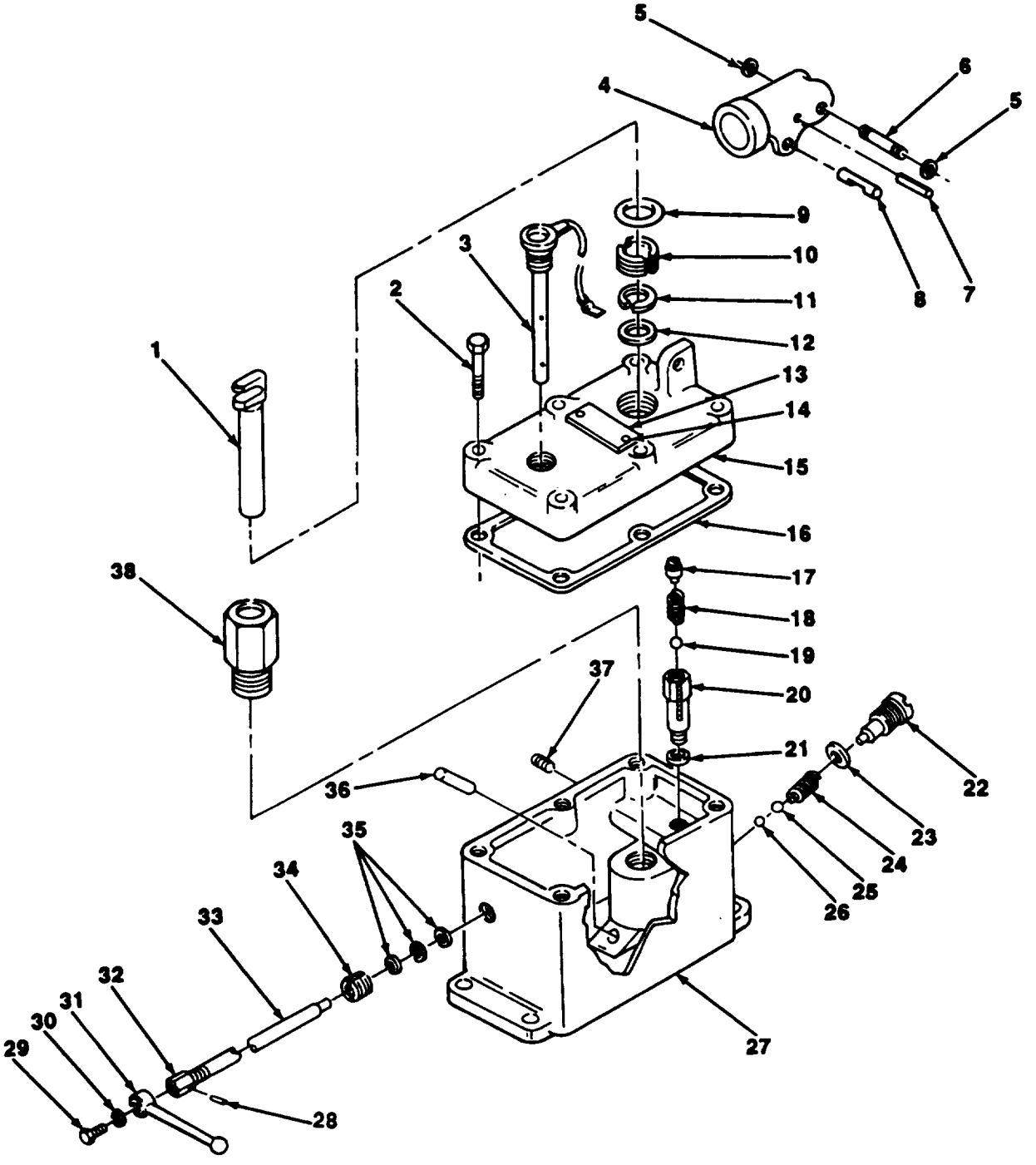

4-82. HYDRAULIC PUMP REPAIR (M840) (Con?).

d. ADJUSTMENT

WARNING

Hydraulic fluid pressure is extremely high when adjusting hydraulic pump. All safety precautions should be taken when performing operation. Wear protective clothing, hand, and eye protection. Failure to follow this warning may result in injury or death.

NOTE

Adjustment procedures may be performed with hydraulic pump and pressure gage on a workbench.

1. Connect hydraulic pump to hydraulic pressure gage capable of pressure to 6500 psi (44,818kPa).
2. Fill hydraulic pump with hydraulic fluid and bleed air from system (para 4-75).
3. Ensure that lever (31) Is facing PUMP position.
4. Remove Six bolts (2), cover (15), and gasket (18).
5. lighten valve adjusting plug (17) to fully close relief valve (20).
6. Install gasket (16) and cover (15) with six bolts (2).
7. Operate hydraulic pump until pressure gage reads 6000 psi (41,370 kPa).
8. Remove six bolts (2), cover (15), and gasket (16).
9. Slowly rotate valve adjusting plug (17) counter-Clockwise until gage pressure starts to drop, then rotate plug ¼ turn clockwise.
10. Again install gasket (16) and cover (15) with six bolts (2).
11. With lever (31) still facing PUMP position, operate hydraulic pump. Pressure should remain between 5800-6200 psi (39,99142,749 kPa).
12. 12. If necessary, repeat steps 8 through 11. Rotate valve adjusting plug (17) clockwise or counter-clockwise until proper pressure is maintained.
13. Rotate lever (31) to RELEASE position to release hydraulic pressure.
14. Remove hydraulic pressure gage.

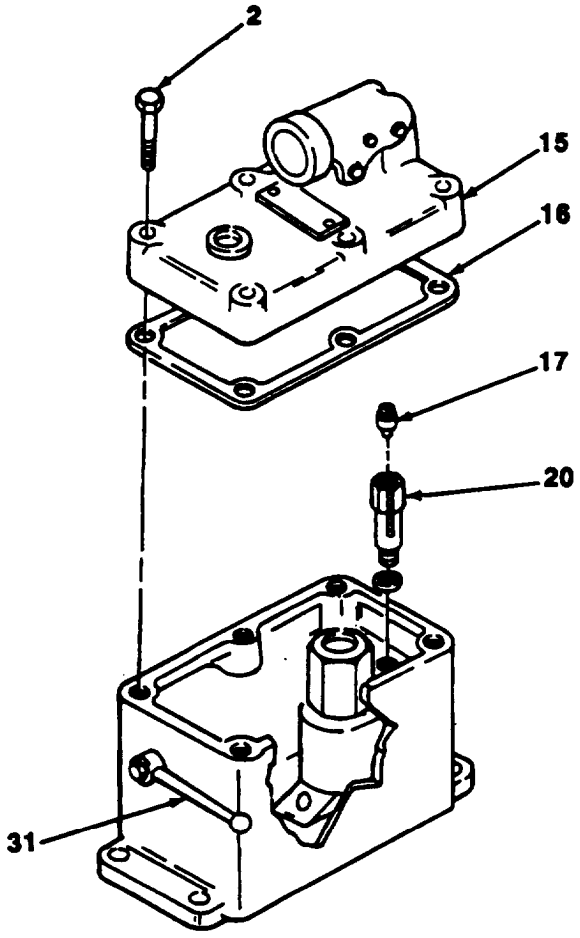

FOLLOW-ON TASKS:

l Install hydraulic pump (pare 4-81).

4-83. HYDRAULIC HOSES AND FITTINGS REPLACEMENT (M832 EXCEPT SN J089-001 THRU 159 AND J017-160 THRU 350).

7his Task Covers:

a. Removal

b. Installation

Initial Setup:

Tool/Test Equipment:

- General mechanic's tool kit
- Common no. 1 shop set

Materials/Parts:

- Rags (Item 11, Appendix E)
- Twelve lockwashers

a. REMOVAL

NOTE

- Perform steps 1 through 11 to remove hydraulic hoses and fittings from front dolly
- Perform steps 12 through 21 to remove hydraulic hoses and fittings from rear dolly.

1. Disconnect coupling (9) from elbow (10).
2. Remove coupling (9) from end of hydraulic hose (8).
3. Remove hydraulic hose (8) from elbow (6).
4. Remove elbow (10) end reducer (11) from hydraulic cylinder (12).
5. Remove elbow (6) from lifting-leveling jack valve (22).

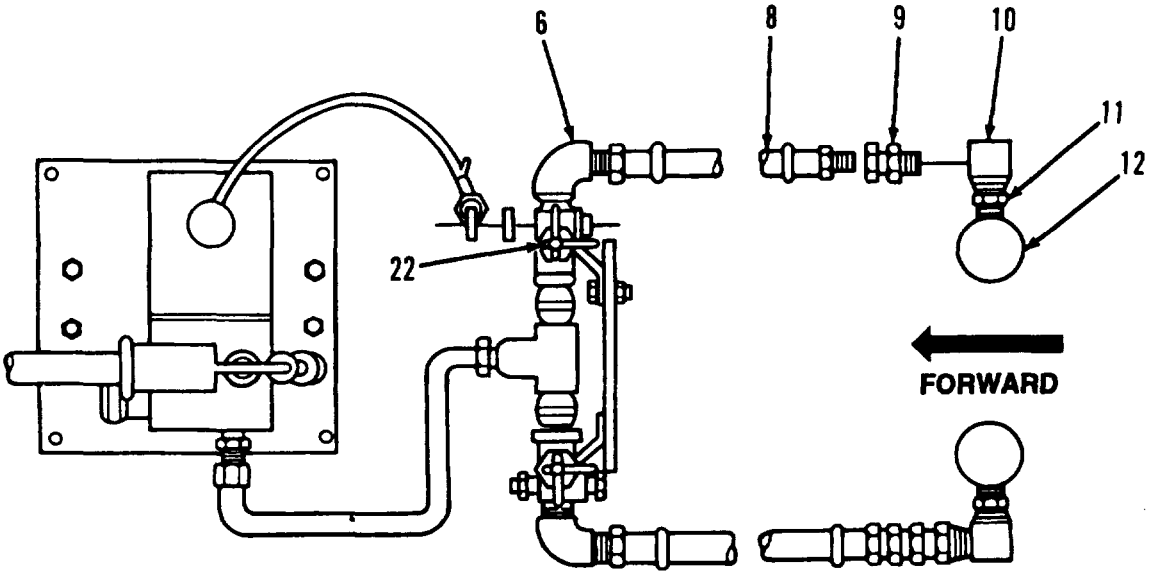

FRONT DOLLY

4-83. HYDRAULIC HOSES AND FITTINGS REPLACEMENT (M832 EXCEPT SN J089-001 THRU 159 AND J017-160 THRU 350) (Con't).

6. Repeat steps 1 through 5 for other side.
7. Remove tube (18) from bushing (19) and tee (20).
8. Remove bushing (19) from hydraulic pump (1).
9. Remove four nuts (2), lockwashers (3), lanyard (4), four spacer plates (5), and bolts (7), and remove tea (20), nipple (21), and lifting-leveling jack valve (22) assembly from mounting brackets (13). Discard lockwashers.
10. Remove two lifting-leveling jade valves (22) and nipples (21) from tee (20).
11. Remove four nuts (16), lockwashers (15), bolts (17), and mounting brackets (13) from bracket (14). Discard lockwashers.

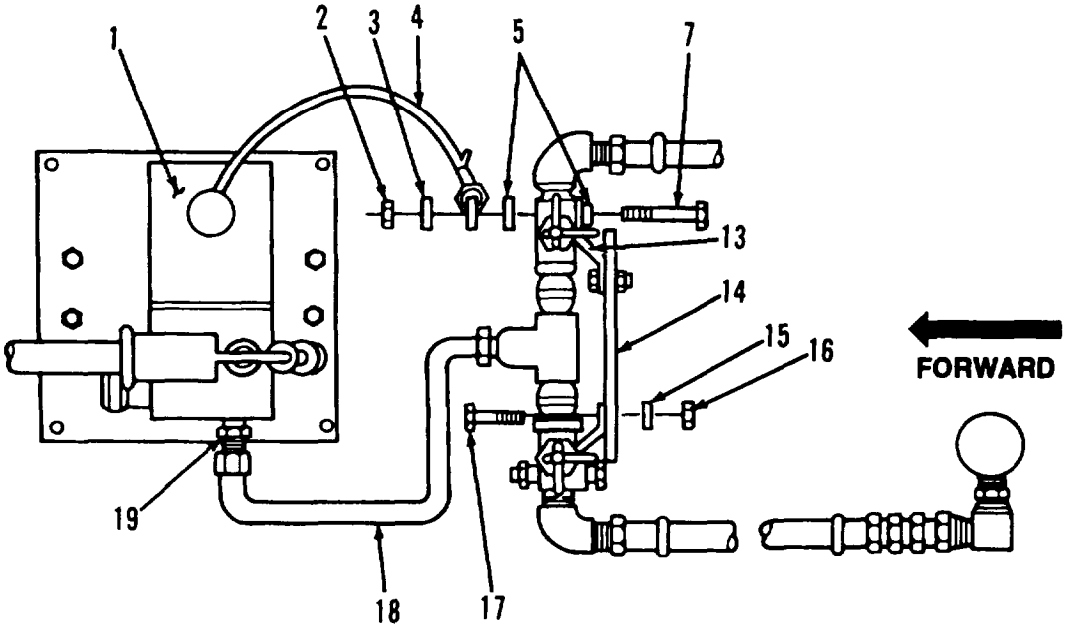

FRONT DOLLY

12. Disconnect coupling (37) from elbow (38).
13. Remove coupling (37) from end of hydraulic hose (36).
14. Remove hydraulic hose (36) from elbow (31).
15. Remove elbow (36) and reducer (39) from hydraulic cylinder (40).
16. Remove elbow (31) from lifting-leveling jack valve (30).
17. Repeat steps 12 through 16 for other side.
18. Remove tube (25) from bushing (24) and tee (26).

4-83. HYDRAULIC HOSES AND FITTINGS REPLACEMENT (M832 EXCEPT SN J089-001 THRU 159 AND J017-160 THRU 350) (Con't).

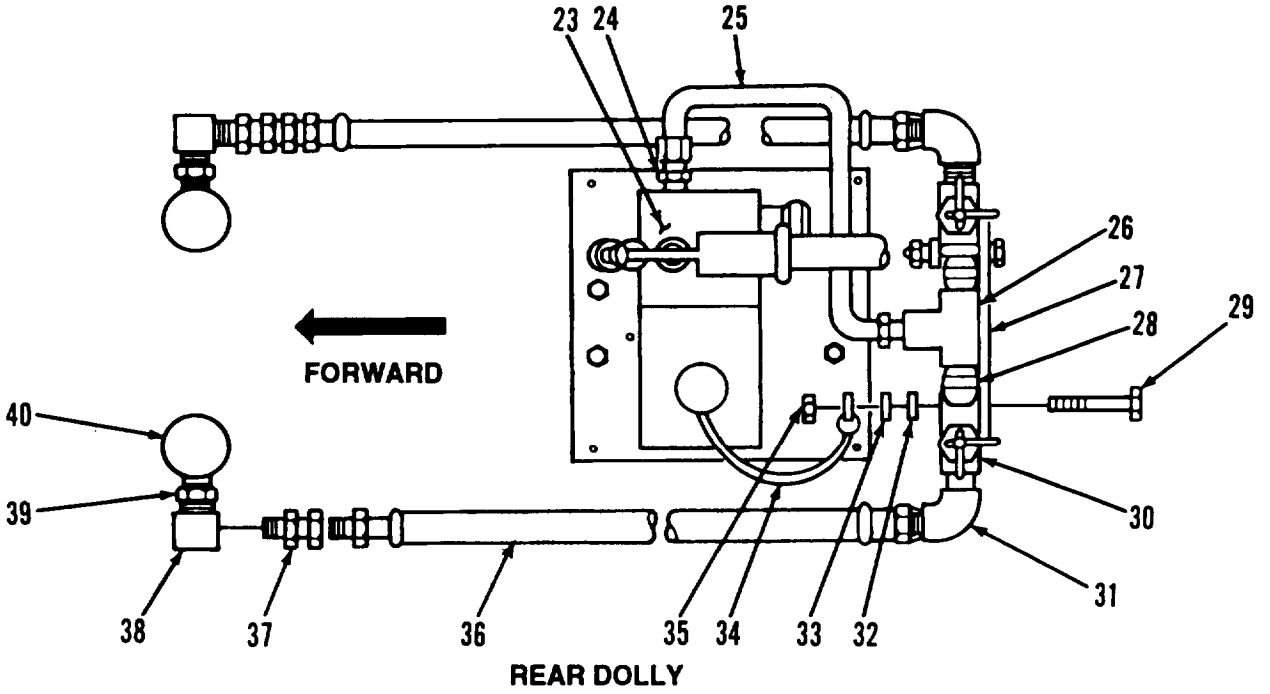

19. Remove bushing (24) from hydraulic pump (23).

20. Remove four nuts (35), lanyard (34), four lockwashers (33), two spacer plates (32), and four bolts (29), and remove tee (28), nipple (28), and lifting-leveling jack valve (30) assembly from bracket (27). Discard lockwashers.

21. Remove two lifting-leveling jack valves (30) and nipples (28) from tee (28).

b. INSTALLATION

NOTE

Perform steps 1 through 10 to install hydraulic hoses and fittings to rear dolly.

Perform steps 11 through 21 to install hydraulic hoses and fittings to front dolly.

1. Install two nipples (28) and lifting-leveling jack valves (30) to tee (28).

2. Install tee (28), nipple (28), and lifting-leveling jack valve (30) assembly to bracket (27) with four bolts (28), two spacer plates (32), four new lockwashers (33), lanyard (34), and four nuts (35).

3. Install bushing (24) to hydraulic pump (23).

4. Install tube (25) to tee (26) and bushing (24).

5. Install elbow (31) to lifting-leveling jack valve (30).

4-83. HYDRAULIC HOSES AND FITTINGS REPLACEMENT (M832 EXCEPT SN J089-001 THRU 159 AND J017-160 THRU 350) (Con't).

6. Install reducer (39) and elbow (38) to hydraulic cylinder (40).
7. Connect hydraulic hose (36) to elbow (31)
8. Install coupling (37) to end of hydraulic hose (36).
9. Connect coupling (37) to elbow (38).
10. Repeat steps 5 through 9 for other side.

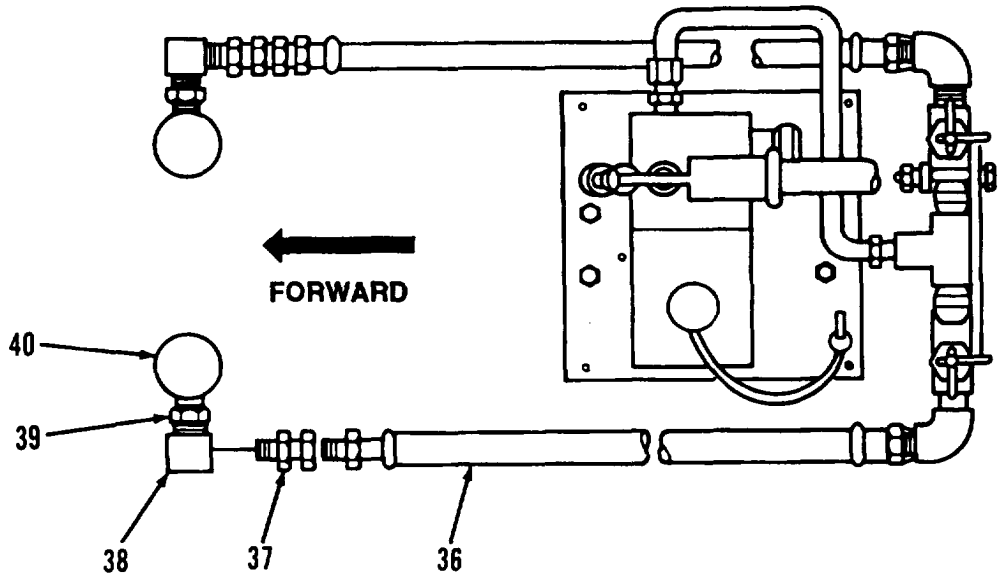

REAR DOLLY

11. Install four mounting brackets (13) to bracket (14) with four bolts (17'), new lockwashers (15), and nuts (18).
12. Install two nipples (21) and lifting-leveling jack valves (22) to tee (20).
13. Install tee (20), nipple (21), and lifting-leveling jack valve (22) assembly to mounting brackets (13) with four bolts (7), spacer plates (5), lanyard (4), four new lockwashers (3), and nuts(2).
14. Install bushing (19) to hydraulic pump (1).
15. Install tube (18) to tee (20) and bushing (19).
16. Install elbow (6) to lifting-leveling jack valve (22).
17. Install reducer (11) and elbow (10) to hydraulic cylinder (12).
18. Connect hydraulic hose (8) to elbow (6).
19. Install coupling (9) to end of hydraulic hose (8).

4-83. HYDRAULIC HOSES AND FITTINGS REPLACEMENT (M832 EXCEPT SN J089-001 THRU 159 AND J017-160 THRU 350) (Con't).

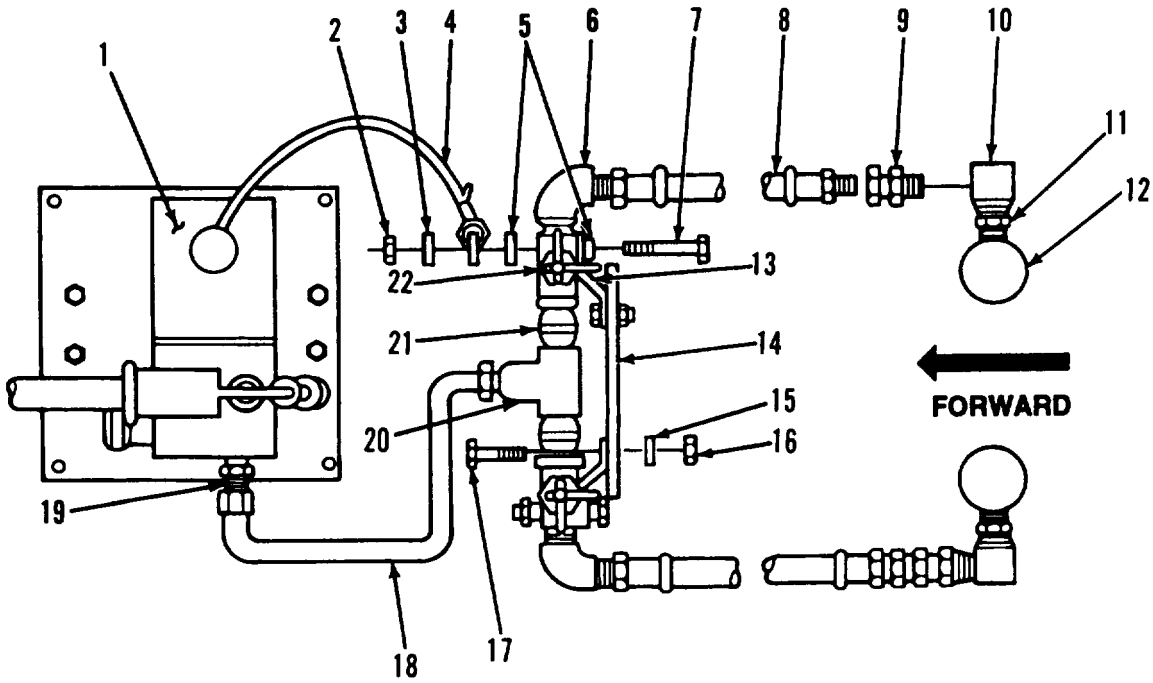

FRONT DOLLY

20. Connect coupling (9) to elbow (10).

21. Repeat steps 16 through 20 for other side.

FOLLOW-ON TASKS:

- Bleed hydraulic system (para 4-75).

4-84. HYDRAULIC HOSES AND FITTINGS REPLACEMENT (M832 SN J089-001 THRU 159 AND J017-160 THRU 350 ONLY).

This *Task Covers:*

a. Removal

b. Installation

Initial Setup:

Equipment Conditions:

- Dolly set parked on level surface with handbrakes applied (para 2-2).
- Dolly set uncoupled from towing vehicle (para 2-16).
- Dolly caster assemblies installed in operational position (para 2-10).

Tools/Test Equipment
- General mechanic's tool kit

Materials/Parts:

- Hydraulic fluid (Item 6, Appendix E)
- Six lockwashers
- Three self-looking nuts

NOTE

Only the MS32 (SN J089-001 thru 159 and J017-160 thru 350) has the hydraulic control valve on the valve bank.

a. REMOVAL

1. Open two leveling valves (1 and 3) on valve bank.

2. Loosen locking bars (5) on two struts (4). Open control valve (2) and allow dolly to lower onto casters.

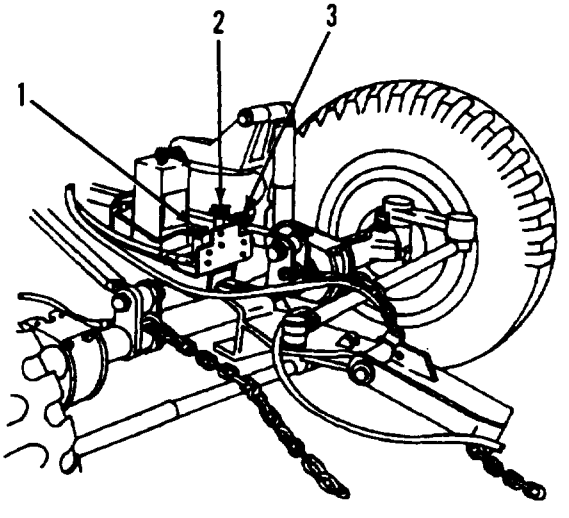

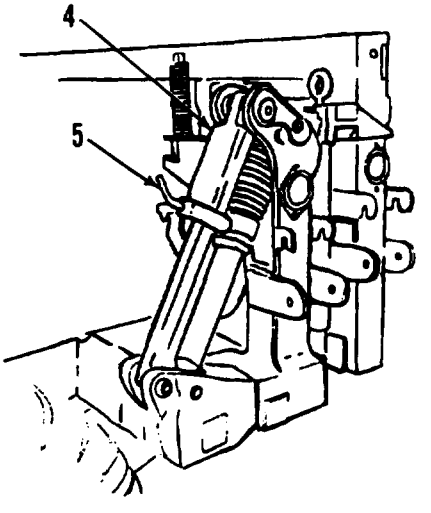

4-84. HYDRAULIC HOSES AND FITTINGS REPLACEMENT (M832 SN J089-001 THRU 159 AND J017-160 THRU 350 ONLY) (Con't).

NOTE

Use a suitable container to catch any fluid that may spill when disconnecting hydraulic lines.

3. Remove hose assembly (10) from two elbows (6 and 9).

4. Remove elbow (9) and bushing (8) from hydraulic cylinder (7).

5. Remove elbow (6) from leveling valve (3).

6. Repeat steps 3 through 5 for other side.

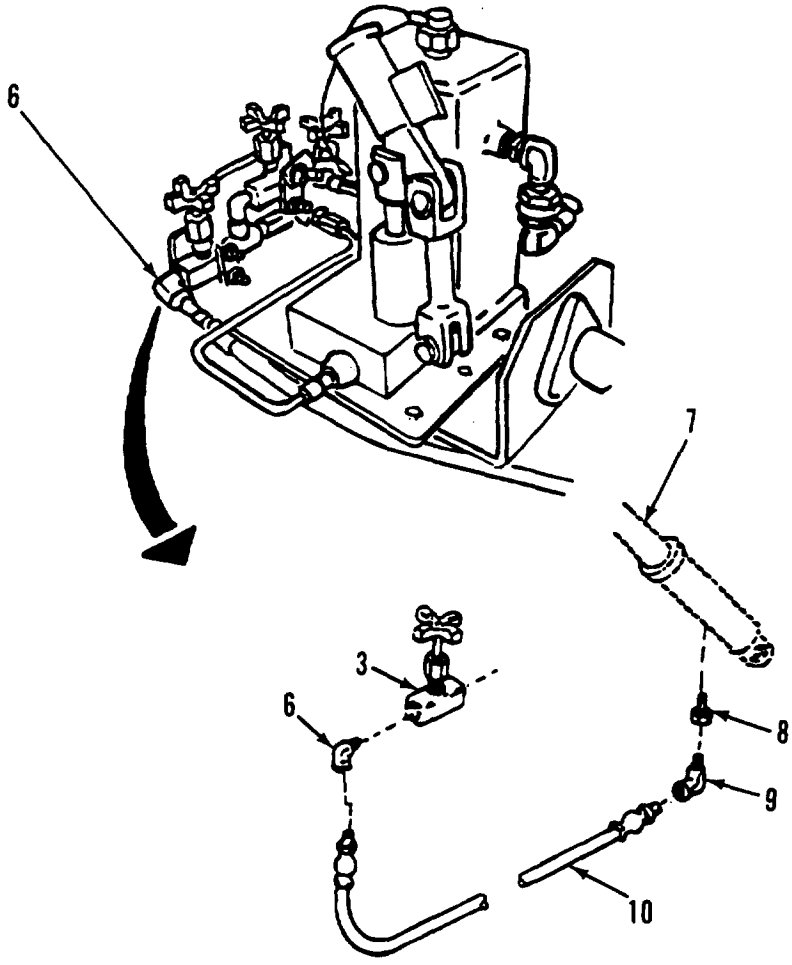

4-84. HYDRAULIC HOSES AND FITTINGS REPLACEMENT (M832 SN J089-001 THRU 159 AND J017-160 THRU 350 ONLY) (Con't).

7. Remove return tube assembly (13) from two elbows (14 and 12).

8. Remove filter (15) from two elbows (14 and 16). Remove elbow (16) from bushing (17).

9. Remove bushing (17) from hydraulic pump (11).

10. Remove output tube assembly (20) from bushing (19) and tee (18).

11. Remove bushing (19) from hydraulic pump (11). Remove tee (18) from leveling valve (1).

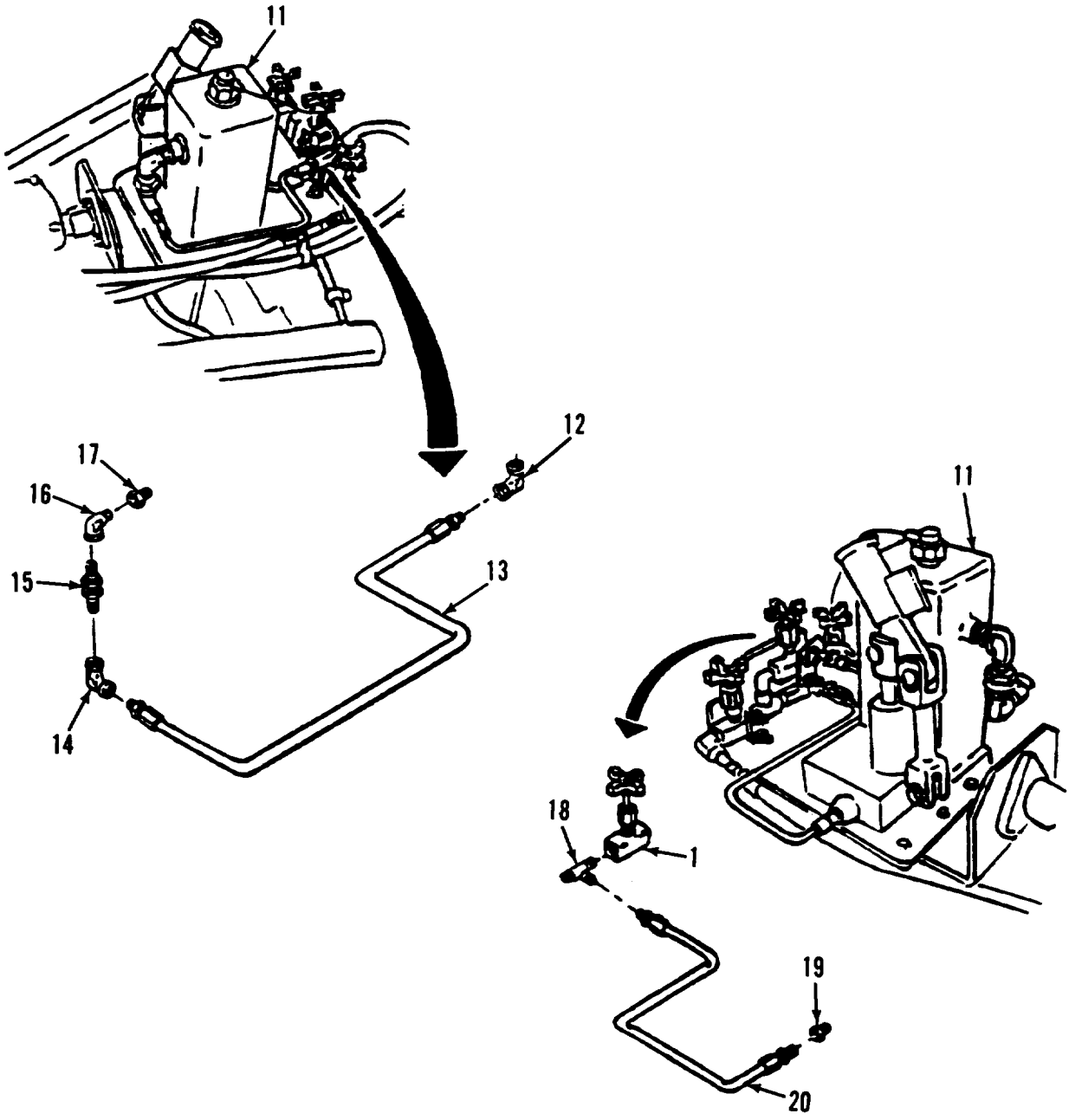

4-84. HYDRAULIC HOSES AND FITTINGS REPLACEMENT (M832 SN J089-001 THRU 159 AND J017-160 THRU 350 ONLY) (Con't).

12. Remove six nuts (27) and lockwashers (26), lanyard (25), three spacers (24), and six bolts (21) from bracket (22). Remove valve assembly from bracket (22) and place on clean surface. Discard lockwashers.

13. Remove control valve (2) and two needle valves (1 and 3) from two tees (18 and 29) and elbows (23 and 32). Remove two tees (18 and 29) from connector (28). Remove three self-locking nuts (31) from three valves (1, 2, and 3). Remove three handles (30) from valves (1, 2, and 3). Discard self-locking nuts.

b. INSTALLATION

1. Install two tees(18 and 29) on connector (28). Install elbow (32) on tee (29). Install elbow (23) on control valve (2). Install three valves (1, 2, and 3) on bracket (22). Install three handles (30) on valves (1, 2, and 3). Secure handles (30) with three new self-locking nuts (31).

2. Position valve assembly on bracket (22) and install six bolts (21), three spacers (24), lanyard (25), and six new lockwashers (26). Loosely install six nuts (27) on bolts (21). Adjust position of valve assembly as required and tighten nuts (27).

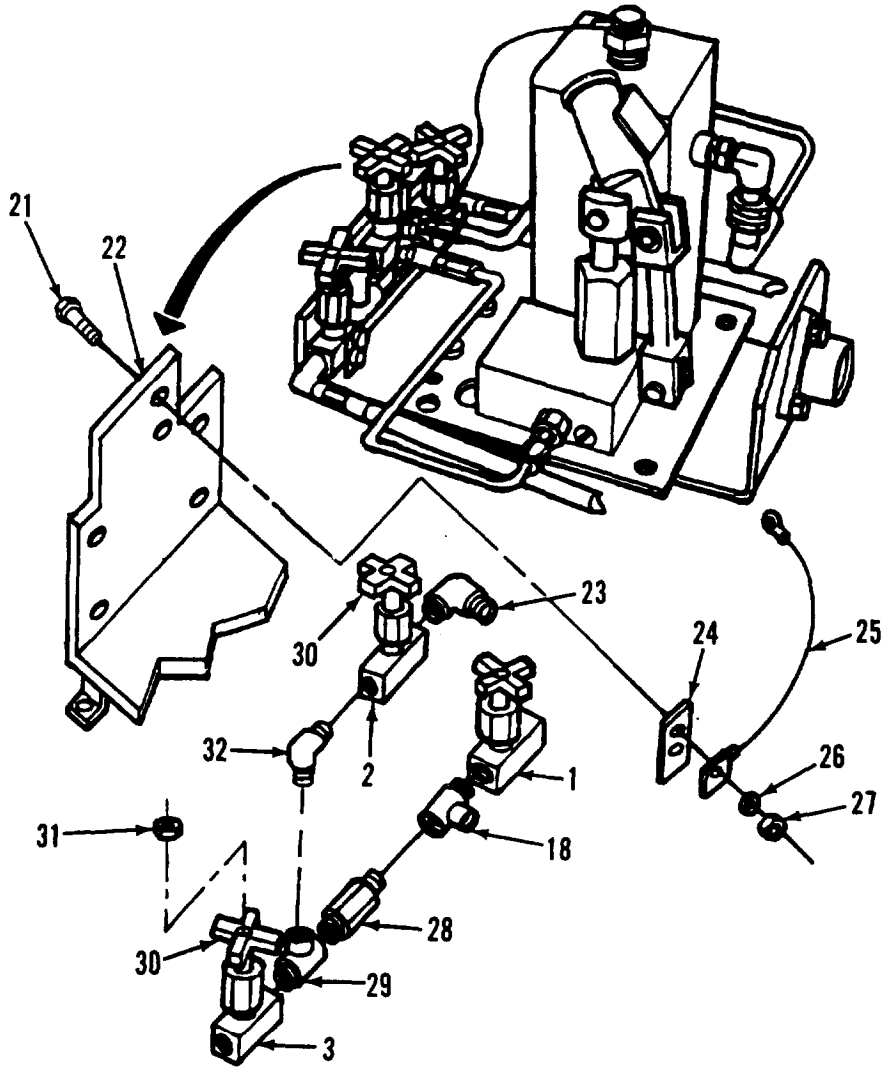

4-84. HYDRAULIC HOSES AND FITTINGS REPLACEMENT (M832 SN J089-001 THRU 159 AND J017-160 THRU 350 ONLY) (Con't).

3. Install bushing (19) on hydraulic pump (11), and install tee (18) on leveling valve(1).

4. Install output tube assembly (20) on bushing(19) and tee (18).

5. Install bushing (17) and elbow (16) on hydraulic pump (11).

6. Install filter (15) on elbow (16) on hydraulic pump (11). Install elbow (14) on filter (15).

7. Install return tube assembly (13) on elbow (14) and elbow (12).

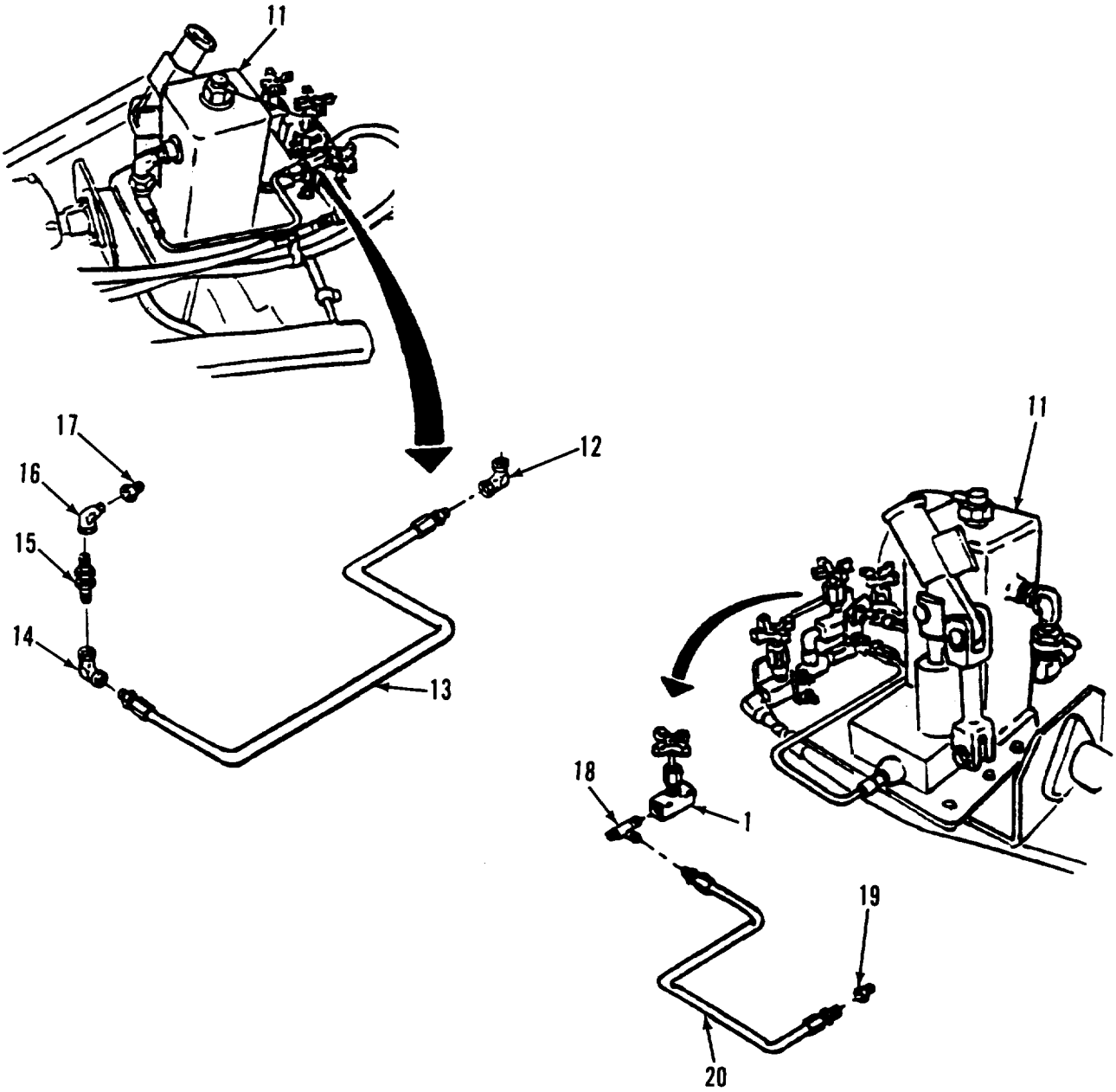

4-84. HYDRAULIC HOSES AND FITTINGS REPLACEMENT (M832 SN J089-001 THRU 159 AND J017-160 THRU 350 ONLY) (Con't).

8. Install elbow (6) on leveling valve (3).

9. Install bushing (8) and elbow (9) on hydraulic cylinder (7).

10. Install hose assembly (10) on two elbows (6 and 9).

11. Repeat steps 8 through 10 for other side.

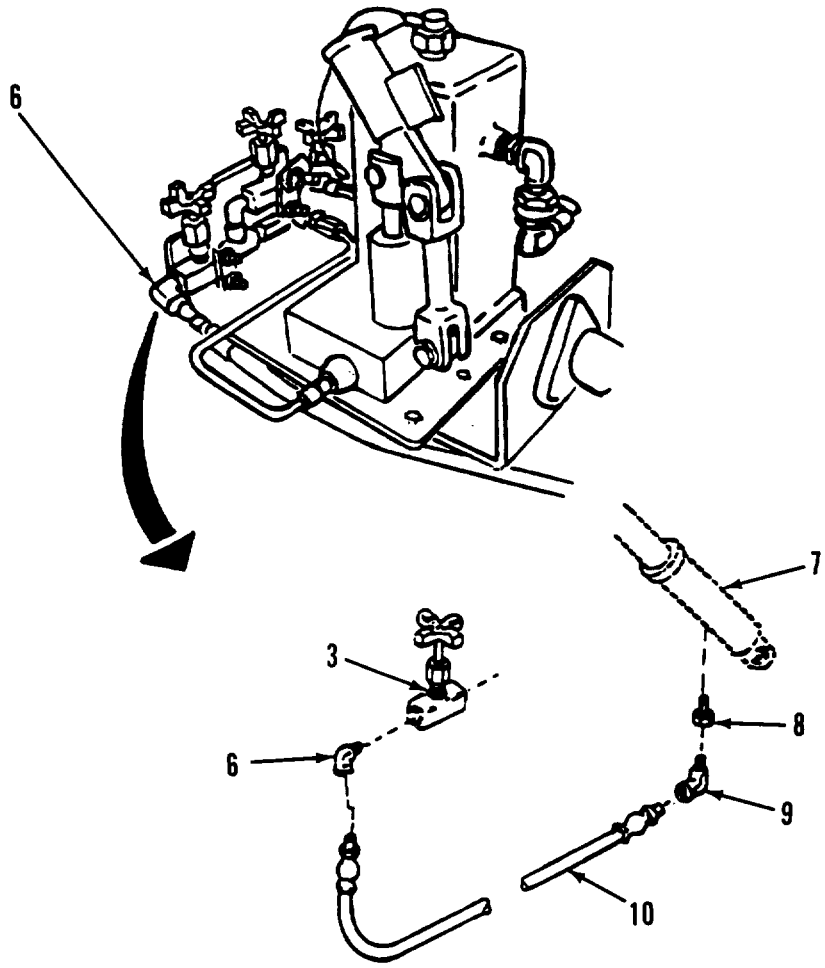

FOLLOW-ON TASKS:

- Bleed hydraulic system (pars 4-78).
- install dolly set coaster assemblies in stowed position (para 2-10).

4-85. HYDRAULIC HOSES AND FITTINGS REPLACEMENT (M840).

This Task Covers:

a. Removal

b. Installation

Initial Setup:

Tools/Test Equipment

- General mechanic's tool kit
- Common no. 1 shop set

Materials/Parts:

- Rags (Item 11, Appendix E)
- One lockwasher

a. REMOVAL

NOTE

M840 has four hydraulic hoses Perform following steps to remove each hydraulic hose.

1. Disconnect hydraulic hose (1) from adapter (12).
2. Remove hydraulic cylinder(16) from dolly (para 4-86).

NOTE

Not. position of fittings for Installation.

3. Remove adapter (12), lifting-leveling jack valva (13), elbow (14), and adapter (15) from hydraulic cylinder (16).

NOTE

Only one hydraulic hose of M840 has clamp. Perform steps 4 and 5 to remove clamp.

4. Remove screw (2) and lockwasher (3) to free two clamps (4 and 5) from rear axle (6). Discard lockwasher,
5. Remove clamp (4) from hydraulic hose (1).
6. Remove hydraulic hose (1) from tee (7).
7. Disconnect hydraulic hose (8) from tee (7).
8. Remove tee (7), bushing (9), and adapter (10) from hydraulic pump (11).

b. INSTALLATION

1. Install adapter (10), bushing (9), and tee (7) to hydraulic pump (11).
2. Connect hydraulic hose (8) to tee (7).
3. Connect hydraulic hose (1) to tee (7).

NOTE

Only one hydraulic hose of M840 *has* clamp. Perform steps 4 and 5 to Install clamp.

4. Install clamp (4) to hydraulic hose (1).

4-85. HYDRAULIC HOSES AND FITTINGS REPLACEMENT (M840).

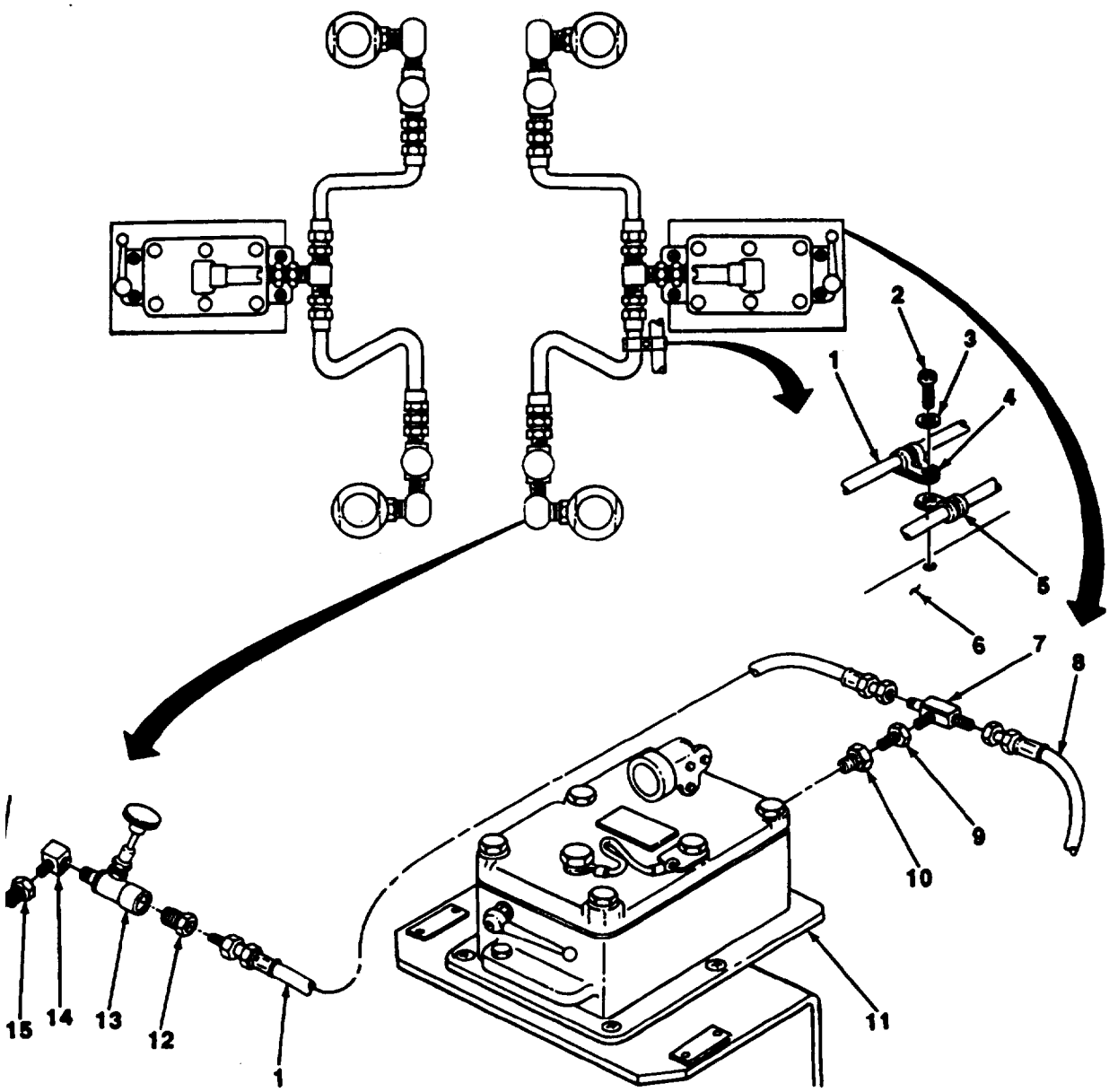

5. Install two clamps (4 and 5) to rear axle (6) with new lockwasher (3) and screw (2).

6. Install adapter (15), elbow (14), lifting-leveling jack valve (13), and adapter (12) to hydraulic cylinder (16).

7. Install hydraulic cylinder (16) to dolly (para 4-86).

8. Connect hydraulic hose (1) to adapter (12).

FOLLOW-ON TASKS:

- Bleed hydraulic system (para 4-75).

4-86. HYDRAULIC CYLINDER REPLACEMENT (M832 AND M840).

This Task Covers:

a. Removal

b. Installation

Initial Setup:

Equipment Conditions:

Dolly set parked on level surface with handbrakes applied (para 2-2).
- Dolly set caster assemblies removed from vehicle (M832 SN J089-001 thru 159 and J017-160 thru 350), rear hydraulic cylinder replacement only (pars 2-10).

Materials/Parts:

Rags (Item 11, Appendix E)
Two cotter pins (M840)
Three rotter pins (M832)
LockWasher (M832)

Tools/Test Equipment

- General mechanic's tool kit
- Common no. 1 shop set

a. REMOVAL

NOTE

- Perform steps 1 through 9 for the M832.
- Perform steps 10 through 15 for the M840.

1. Tighten clamp assembly (1).

2. For the M832 (SN J089-001 thru 159 and J017-160 thru 350 only), open hydraulic pump (3) control valve (4) and two leveling valves (2).

3. For the M832 (except SN J089-001 thru 159 and J017-160 thru 350), rotate hydraulic pump (5) release valve handle (6) counterclockwise to RELEASE position.

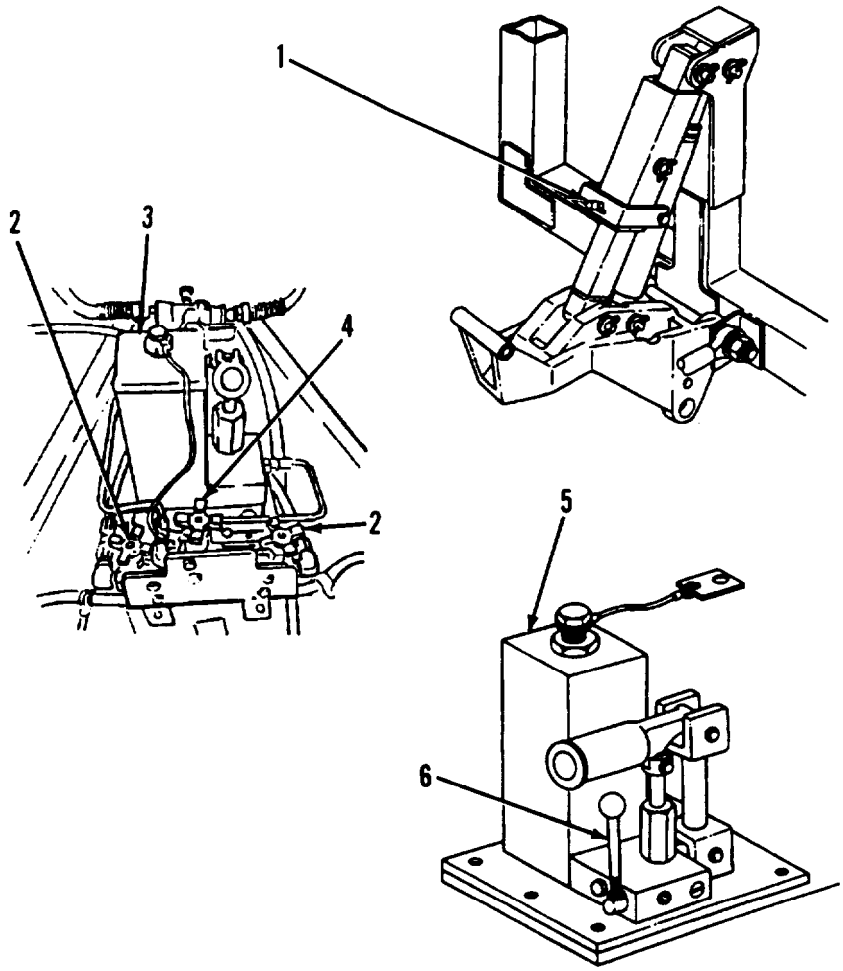

4-86. HYDRAULIC CYLINDER REPLACEMENT (M832 AND M840) (Con't).

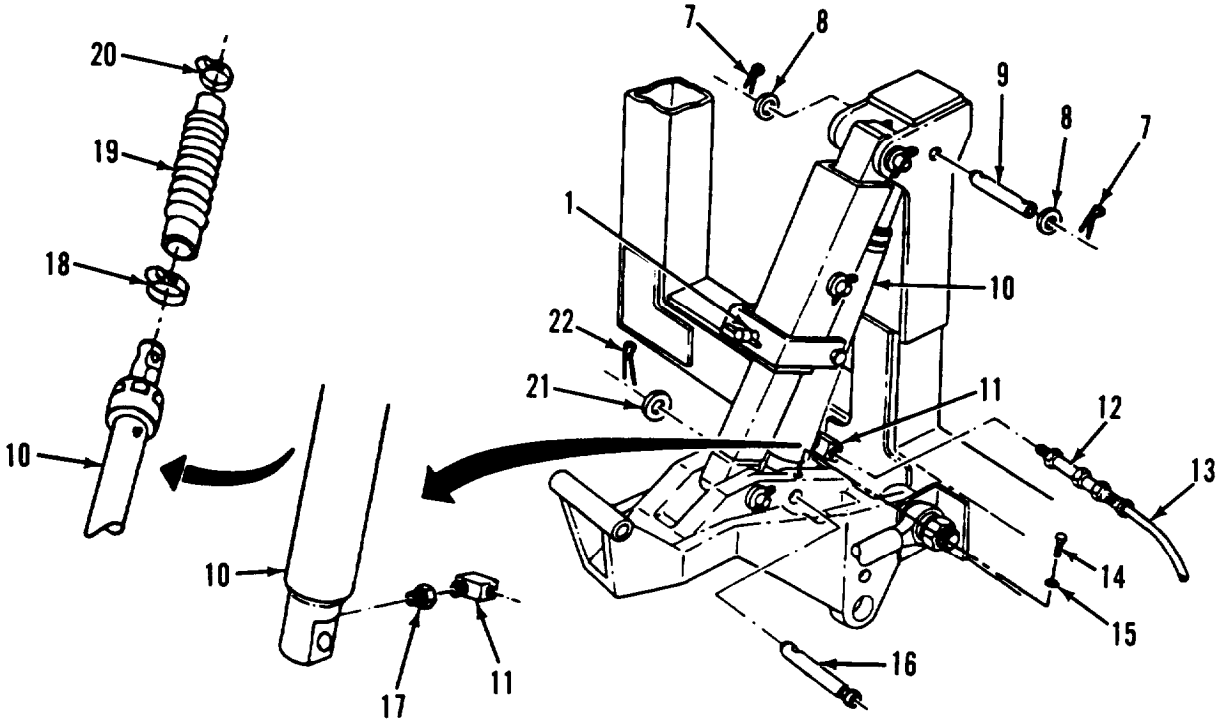

M832

4. Remove two cotter pins (7) and washers (8) and pin (9) from hydraulic cylinder (10), Discard cotter pins.

NOTE

Use a suitable container to catch any fluid that may spill when disconnecting hydraulic lines.

5. Disconnect coupling (12) of hydraulic hose (13) from elbow (11).

6. Remove elbow (11) and reducer (17) from hydraulic cylinder (10).

7. Remove screw (14), lockwasher (15), cotter pin (22), washer (21), and pin (16) from lower end of hydraulic cylinder (10). Discard cotter pin and lockwasher.

8. Compress hydraulic cylinder (10) and remove from vehicle.

9. For the M832 (SN J089-001 thru 159 and J017-160 thru 350 only), if hydraulic cylinder boot (19) is undamaged, remove two clamps (18 and 20) from boot (19) and remove boot (19) from hydraulic cylinder (10). Retain boot for installation on new hydraulic cylinder.

4-86. HYDRAULIC CYLINDER REPLACEMENT (M832 AND M840) (Con't).

10. Tighten clamp assembly (1).

11. Rotate hydraulic pump (24) release valve handle (23) counterclockwise to RELEASE position.

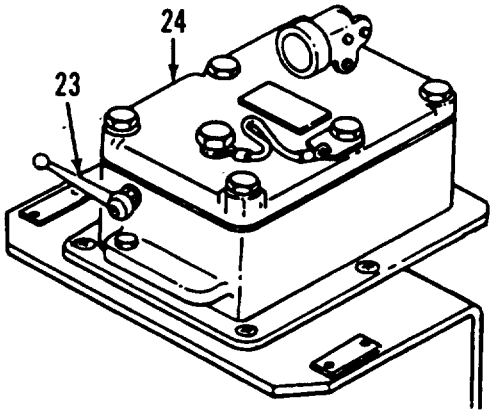

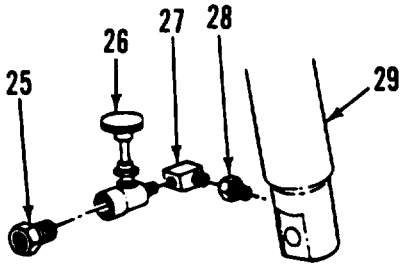

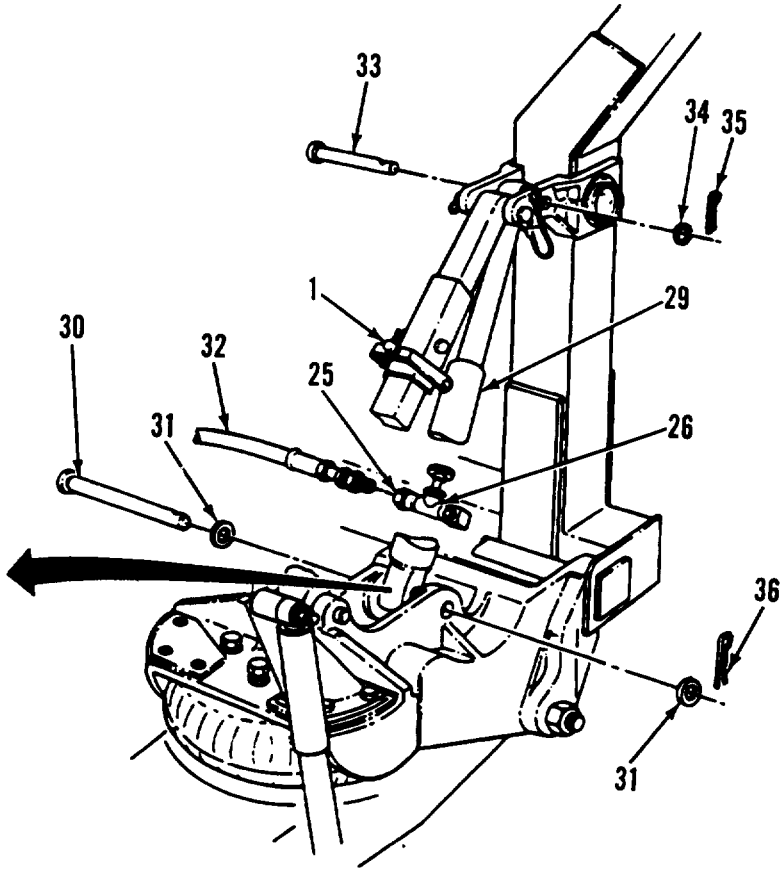

M840

12. Disconnect hydraulic hose (32) from adapter (25).

13. Remove cotter pin (36), two washers (31), and pin (30) from lower end of hydraulic cylinder (29). Discard cotter pin.

14. Remove cotter pin (35), washer (34), pin (33), and hydraulic cylinder (29) from dolly. Discard cotter pin.

4-86. HYDRAULIC CYLINDER REPLACEMENT (M832 AND M840) (Con't).

NOTE

Note position of fittings for installation purposes.

15. Remove adapter (25), lifting-leveling jack valve (26), elbow (27), and adapter (28) from hydraulic cylinder (29).

b. INSTALLATION

NOTE

- Perform steps 1 through 5 for the M840.
- Perform steps 6 through 12 for the M832.

1. Install adapter (28), elbow (27), lifting-leveling jack valve (26), and adapter (25) on hydraulic cylinder (29).
2. Install hydraulic cylinder (29) on dolly with pin (33), washer (34), and new cotter pin (35).
3. Install lower end of hydraulic cylinder (29) on dolly with pin (30), two washers (31), and new cotter pin (36).
4. Connect hydraulic hose (32) to adapter (25).
5. Rotate hydraulic pump (24) release valve handle (23) clockwise to PUMP position.

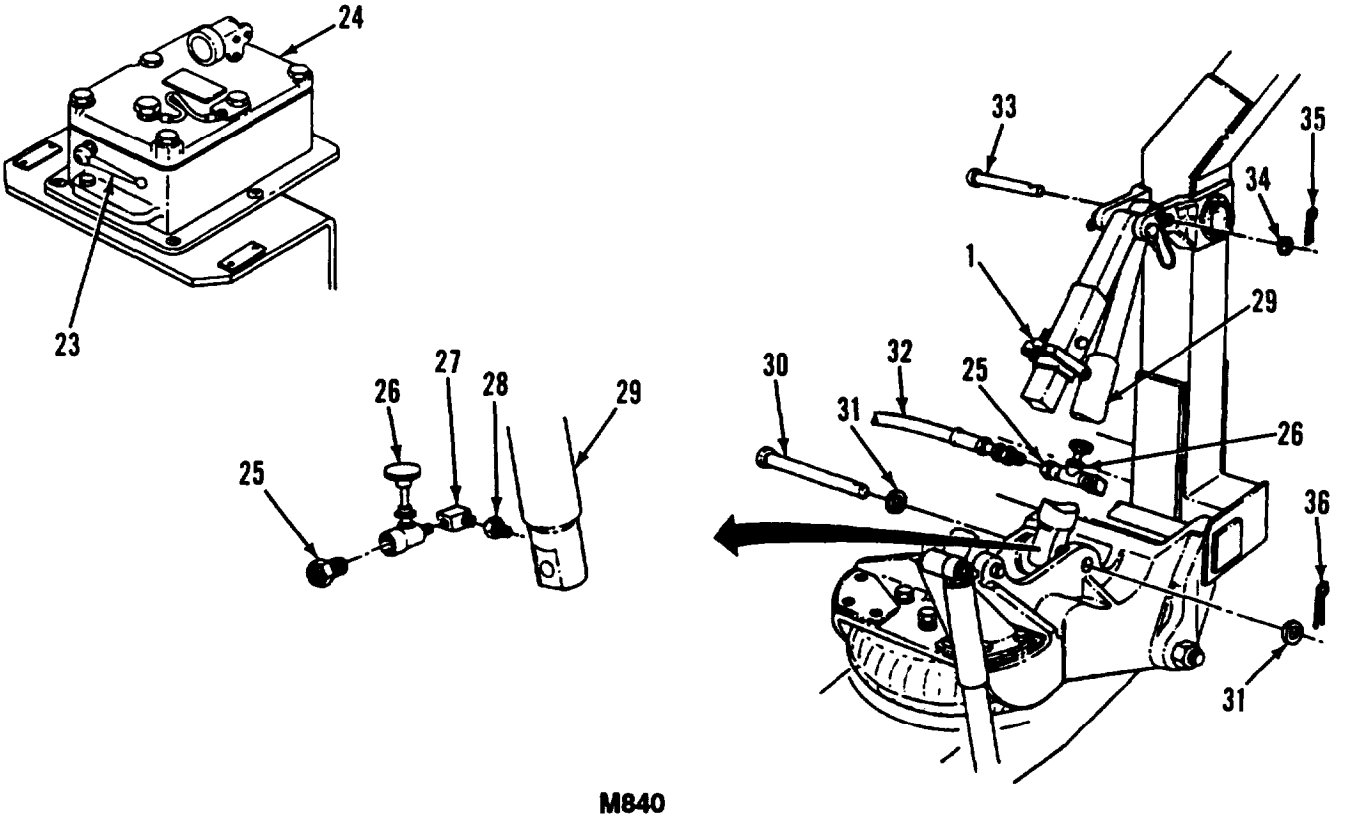

M840

4-86. HYDRAULIC CYLINDER REPLACEMENT (M832 AND M840) (Con't).

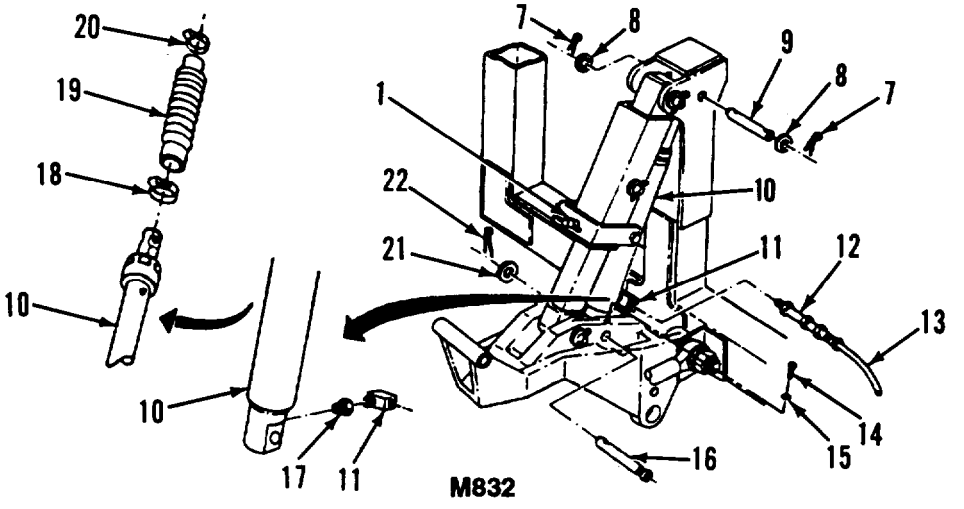

6. For the M832 (SN J089-001 thru 159 and J017-160 thru 350 only), install boot (19) on hydraulic cylinder (1 O) and secure with two clamps (18 and 20). Position clamps so screws face lock struts.

7. Install hydraulic cylinder (10) on dolly with pin (9) and two washers (8) and new rotter pins (7).

8. Install lower end of hydraulic cylinder (10) on dolly with pin (16), washer (21), new cotter pin (22), new lockwasher (15), and screw (14).

9." Install reducer (17) and elbow (11) on hydraulic cylinder (10).

10. Connect coupling (12) of hydraulic hose (13) to elbow (11).

11. For the M832 (SN J089-001 thru 159 and J017-160 thru 350 only), open hydraulic pump (3) control valve (4) and two leveling valves (2).

12. For the M832 (except SN J089-001 thru 159 and J017-160 thru 350), rotate hydraulic pump (5) release valve handle (6) clockwise to PUMP position,

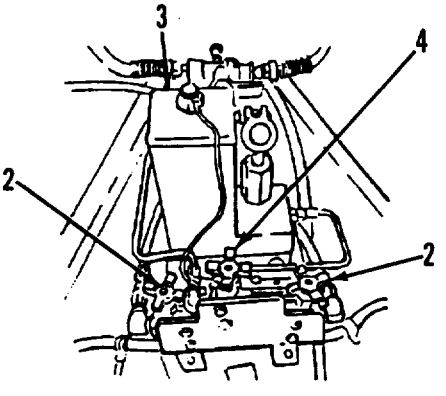

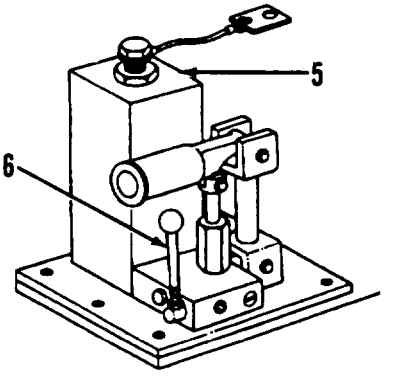

FOLLOW-ON TASKS:

- Bleed hydraulic system (para 4-75 or 4-78).
- Install dolly set caster assemblies on rear dolly, if removed (para 2-10).

4-87. HYDRAULIC CYLINDER BOOT REPLACEMENT (M832 SN J089-001 THRU 159 AND J017-180 THRU 350 ONLY).

This Task Covers:

a. Removal **b. Installation**

Initial Setup:

Equipment Condtions:

- Deity set parked on level surface with hand-brakes applied (para 2-2).
- Deity set uncoupled from towing vehicle (para 2-16).

Materials/Parts:

- Two cotter pins
- One hydraulic cylinder boot

NOTE

Only the M332 (SN J089-001 thru 159 and J017-160 thru 350) has hydraulic cylinder boots.

a. REMOVAL

1. Open hydraulic pump control valve (1).

2. Remove two cotter pins (4) and washers (5) and straight pin (3) securing hydraulic cylinder (6) to top of suspension bar (2). Discard cotter pins.

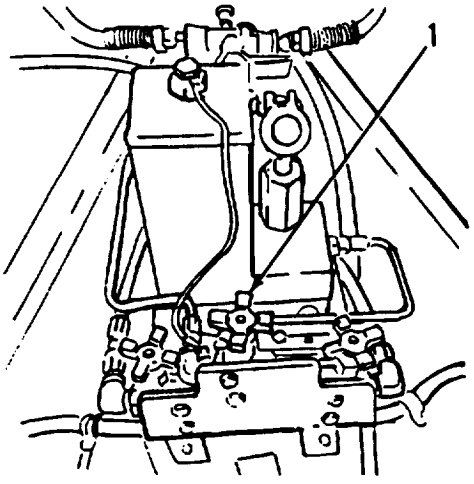

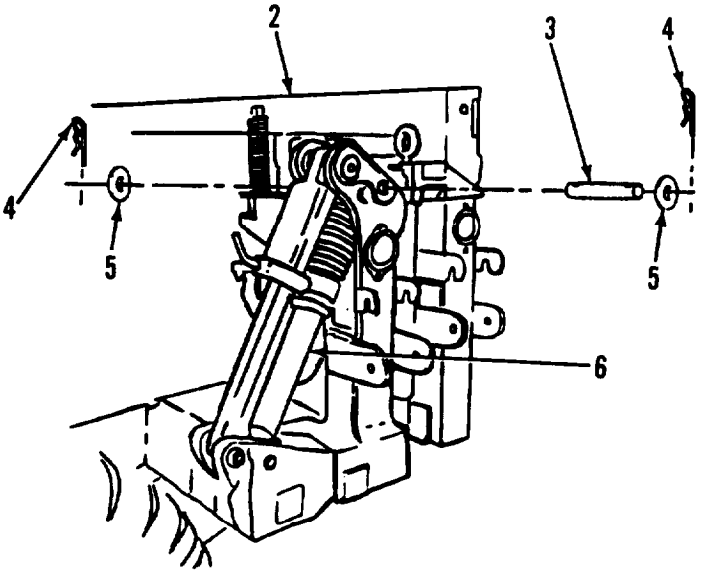

4-87. HYDRAULIC CYLINDER BOOT REPLACEMENT (M832 SN J089-001 THRU 159 AND J017-160 THRU 350 ONLY) (Con't).

3. Compress hydraulic cylinder (6) until top clamp (9) on boot (8) is accessible.

4. Remove two clamps (7 and 9) securing boot (8) to hydraulic cylinder (6).

5. Remove boot (8) from hydraulic cylinder (6). Discard boot (8).

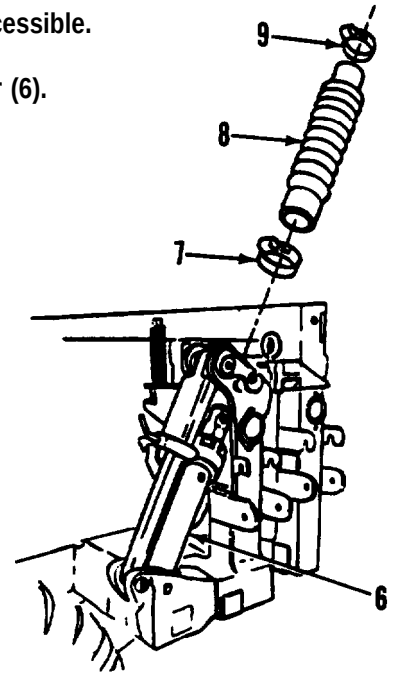

b. INSTALLATION

NOTE

Make sure boot is pulled down until it completely covers outer cylinder.

1. Install new boot (8) on hydraulic cylinder (6).

CAUTION

Make sure hydraulic cylinder boot clamps are positioned so clamp screws face the lock struts. If clamps are not properly positioned, clamp screws could be damaged.

2. Secure new boot (8) to hydraulic cylinder (6) with two clamps (7 and 9).

3. Install straight pin (3) and two washers (5) and new cotter pins (4) in hydraulic cylinder (6) and suspension bar (2).

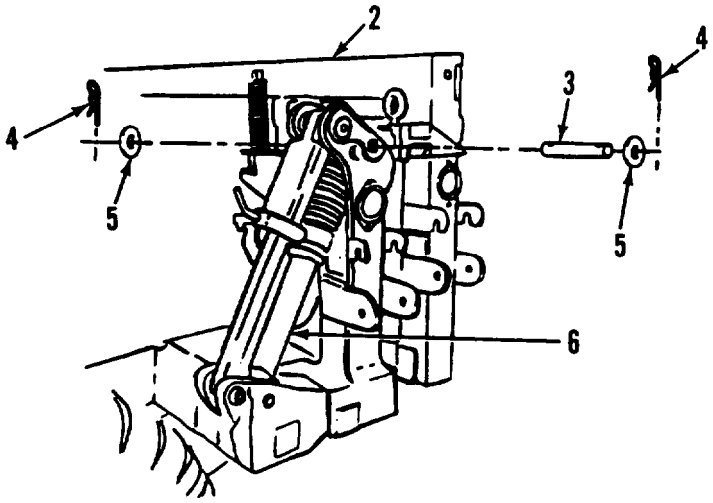

Section XV. PREPARATION FOR STORAGE OR SHIPMENT

Paragraph Title	Pago Number
Care of Equipment in Administrative Storage	4-245
Definition of Administrative Storage	4-243
Exercise Schedule, Table 4.3	4-245
General	4-243
Preparation of Equipment for Administrative Storage	4-243
Preparation of Equipment for Shipment	2-246
Procedures for Common Components and Miscellaneous items	4-245
Removal of Equipment from Administrative Storage	4-246

4-88. GENERAL

a. This section contains requirements and procedures for administrative storage of equipment that is issued to and in use by Army activities worldwide.

b. The requirements specified herein are necessary maintain equipment in administrative storage in such a way as to achieve the maximum readiness condition.

c. Equipment that is placed in administrative storage should be capable of being readied to perform its mission within a 24-hour period, or as otherwise maybe prescribed by the approving authority. Before equipment is placed in administrative storage, a current preventive maintenance checks and services (PMCS) should be completed and deficiencies corrected.

d. Report equipment in administrative storage as prescribed for all reportable equipment.

e. Perform inspections, maintenance services, and lubrication as specified herein.

f. Records and reports to be maintained for equipment in administrative storage are those prescribed by DA Pam 738-750 for equipment in use.

g. A 10% variance is acceptable on time, running hours, or mileage used to determine the required maintenance actions.

h. Accomplishment of applicable PMCS, as mentioned throughout this section, will be on a quarterly basis.

4-89. DEFINITION OF ADMINISTRATIVE STORAGE.

The placement of equipment in administrative storage can be for short periods of time when a shortage of maintenance effort exists. items should be ready for use within the time factors as determined by the directing authority. During the storage period, appropriate maintenance records will be kept.

4-90. PREPARATION OF EQUIPMENT FOR ADMINISTRATIVE STORAGE.

a. Storage Site.

(1) Select the best available site for administrative storage. Separate stored equipment from equipment in use. Conspicuously mark the area “Administrative Storage”.

(2) Covered space is preferred.

(3) Open sites should be improved hardstand, if available. Unimproved sites should be kept firm, well drained, and free of excessive vegetation.

4-90. PREPARATION OF EQUIPMENT FOR ADMINISTRATIVE STORAGE (Con't).

b. Storage Plan.

(1) Store equipment so as to provide maximum protection from the elements and to provide access for Inspection, maintenance, and exercising. Anticipate removal or deployment problems and take suitable precautions.

(2) Take Into Consideration environmental conditions such as extreme heat or cold high humidity; blowing sand, dust, or loose debris: soft ground; rind: heavy snows: or any combination thereof, and take adequate precautions.

(3) Establish a fire plan and provide for adequate firefighting equipment and personnel.

c. Maintenance Services and Inspection.

(1) Maintenance Services Prior to storage, perform the next scheduled organizational PMCS.

(2) Inspection. Inspect and equipment prior to storage. Do not place equipment in storage in a nonmission-capable condition.

d. Auxill ary Equipment end Basic Issue items.

(1) Process auxiliary equipment and basic Issue Items simultaneously with the major item to which they are assigned.

(2) If possible, store auxiliary equipment and basic Issue Items with the major Item.

(3) If stored apart from the major Item, mark auxiliary equipment and basic issue items with tags indicating the major Item, its registration or serial number and location, and store in protective type closures. In addition, place a tag or list Indicating the location of the removed Items in a conspicuous place on the major Item.

e. Correction of Shortcomings end Deficiencies. Connect all shortcomings and deficiencies prior to storage, or obtain a deferment from the approving authority.

t. Lubrication. Lubricate equipment In accordance with Instructions in chapter 3, section 1.

g. General Cleaning, Painting, end Preservation.

CAUTION

Do not direct water or steam, under pressure, against unsealed electrical systems or any exterior opening. Failure to follow this caution may result in damage to equipment

(1) Cleaning. Clean the equipment of dirt, grease, and other contaminants but do not use vapor decreasing.

(2) Painting. Remove rust and damaged paint by scraping, sanding, or buffing. Sand to a smooth finish and spot paint as necessary (TB 43-0209).

(3) Preservation. After cleaning and drying, Immediately coat unpainted metal surfaces with oil or grease, as appropriate (Chapter 3, Section I).

CAUTION

Place a piece of barrier materiel (Item 3 Appendix E) between desiccant bags and metal surfaces to prevent corrosion.

NOTE

Air circulation under draped covers reduces deterioration from moisture and heat

(4) Weatherproofing. Sunlight, heat, moisture (humidity), and dirt tend to accelerate deterioration. Install all covers (including vehicle protective closures) authorized for the equipment. Close and secure all openings except those required for venting and draining. Seal openings to prevent the entry of rain, snow, or dust. Insert desiccant when complete seal Is required. Place equipment and provide blocking or framing to allow for ventilation and water drainage. Support cover away from Item surfaces that may rust, rot, or mildew.

4-91. CARE OF EQUIPMENT IN ADMINISTRATE STORAGE.

a. Maintenance Services. After equipment has been placed in administrative storage, inspect, service, and exercise as specified heroin

b. Inspection. inspection will usually be visual and must consist of at least a walkaround examination of all any deficiencies. inspect equipment in open storage weekly and equipment in covered storage monthly. inspect all equipment immediately after any severe storm or environmental change. The following are examples of things to look for during a visual inspection:

(1) Low or flat tires.

(2) Condition of preservatives, seals, and wraps.

(3) Corrosion or other deterioration.

(4) Missing or damaged parts.

(5) Water in compartments.

(6) Any other readily recognizable shortcomings or deficiencies.

c. Ropair During Administrative Storage. Keep equipment in an optimum state of readiness. Accomplish the required Services and repairs as expeditiously as possible. Whenever possible, perform all maintenance on-site.

d. Exercising. Excercise equipment in accordance with Table 4-3, Exercise Schedule, and the following instructions:

(1) Vehicle Major Exercise. Depressive equipment by removing only that material restricting exercise. Close all drains, remove blocks, and perform ail before operation checks. Couple dolly set to towing vehicle and drive for at least 25 mi (40 km). Make several right and left 90° turns. Make several hard braking stops without skidding. Do the following during exercising when it is convenient operate all other functional components and perform all during-end after-operation checks.

(2) Scheduled Services. Scheduled services will include inspection per subparagraph b above, and will be conducted in accordance with Table 4-3. Lubricate in accordance with instructions in Chapter 3, Section I.

(3) Correcttive Action. Immediately take action to correct shortcomings and deficincies noted. Record inspection and exercise results on DA Form 2404. Record and report all maintenance actions on DA Form 2407. After exercising, restore the preservation to the original condition. Replenish lubricants used during exercising and note the amount on DA Form 2408.

Table 4-3. Exercise Schedule.

Weeks	2	4	6	8	10	12	14	16	18	20	22	24
PMCS						X						X
Scheduled Services		X		X		X		X		X		
Major Exercise												X

e. Rotation. Rotate items in accordance with any rotational plan that will keep the equipment in an operational and reduce the maintenance effort.

4-92. PROCEDURES FOR COMMON COMPONENTS AND MISCELLANEOUS ITEMS.

a. Tires. Visually inspect tires during each walkaround inspection. This inspection Includes checking tires with a tire gage. Inflate, repair, or replace as necessary those found to be low, damaged, or excessively worn. Mark inflated and repaired tires with chalk for checking at the next inspection.

b. Relay Valve. Drain condensation from relay valve by removing drain plug at bottom of relay valve. Replace drain plug.

c. Seals. Seals may develop leaks during storage, or shortly thereafter. if leeking persists, refer to the applicable maintenance section in this manual for corrective maintenance procedures.

4-93. REMOVAL OF EQUIPMENT FROM ADMINISTRATIVE STORAGE.

a. Activation. Restore the equipment to normal operating condition in accordance with the Instructions contained in Chapter 4, section II.

b. Servicing. Resume the maintenance service schedule in effect at the commencement of storage, or service the equipment before the scheduled dates In order to produce a staggered maintanance workload

4-94. PREPARATION OF EQUIPMENT FOR SHIPMENT.

a. Refer to TM 55-21, TM 55-601, and TM 743-200-1 for additional instructions on processing, storage, and shipment of materiel.

b. Dolly sets that have been removed from storage for shipment do not have to be reprocessed if they will reach their destination within the adminstrative storage period. Reprocess only if inspection reveals any corrosion, or if anticipated in-transit weather conditions make it necessary

c. When a dolly set received and has already been processed for domestic shipment, as indicated on DD Form 1397, the dolly set does not have to be reprocessed for storage unless corrosion and deterioration are found during the inspection upon receipt. List on SF Form 364 all discrepancies found because of poor preservation, packaging, packing, marking, handling, loading, storage, or excessive preservation. Rapairs that cannot be handled by the receiving unit must have tags attached listing the needed rapairs. A report of these conditions will be submitted by the unit commander for action by an ordnance maintenance unit.

CHAPTER 5
DIRECT SUPPORT AND GENERAL SUPPORT MAINTENANCE

Paragraph Title	Page Number
Brakedrum Repair	5-1
Tire Repair	5-2

5-1. BRAKEDRUM REPAIR.

This Task Covers:

a. Inspection

b. Repair

Initial Setup:

Equipment Conditions:

- Hub and brakedrum removed (para 4-47).

Tools/Test Equipment:

- General mechanic's tool kit
- Field automotive shop set

a. INSPECTION

WARNING

DO NOT handle brakeshoes, brakedrums, or other brake components unless ares has been properly cleaned. There may be asbestos dust on these components, which can be dangerous if you touch or breath it. Wear an approved filter mask and gloves. Never use compressed air or a dry brush to clean brake components. Dust maybe removed using an industrial-type vacuum cleaner. Clean dust or mud away from broke components with water and a wet, soft brush or cloth. Failure to follow this warning may result in serious illness or death to personnel.

1. Inspect stud holes (2) for cracks (3). Discard brakedrum (1) if cracks are present.

2. inspect braking surface (6) for cracks (3), heat checking (4), and scoring (5). Reface braking surface if damaged (subpara b).

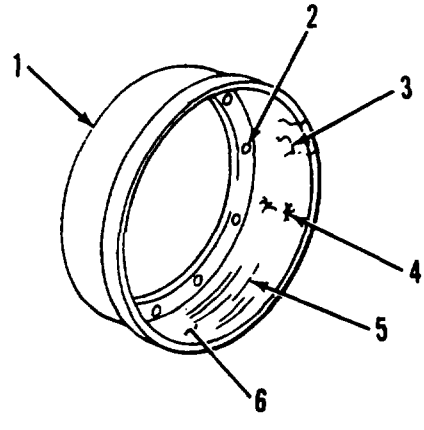

5-1. BRAKEDRUM REPAIR (Con't).

3. Inspect braking Surface (6) for out-of-round at 45° intervals. Out-of-round should not exceed 0.006 in. (0.15mm). If runout exceeds 0.006 in. (0.15 mm), reface braking surface (subpara b).

WARNING

DO NOT use a brakedrum that exceeds maximum wear specifications. Failure to follow this warning may result in brake failure and serious injury or death to personnal.

4. Measure inside diameter of brakedrum (1). Discard brakedrum if inside diameter exceeds 15.085 in. (38.32 cm).

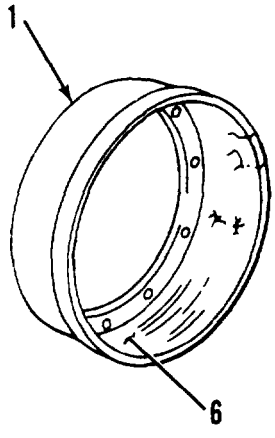

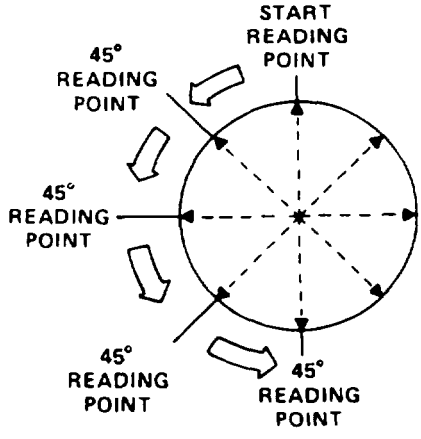

b. REPAIR

WARNING

DO NOT use a brakedrum that exceeds maximum wear specifications. Failure to follow this warning may result in brake failure and serious injury or death to personnal.

1. Reface braking surface (6) with brakedrum lathe, removing a maximum of 0.01 in. (0.25 mm) per cut.

2. Discard brakedrum (1) if inside diameter exceeds 15.085 in. (38.32 cm) after repair.

FOLLOW-ON TASKS:

. Install hub and brakedrum (pars 4-47).

5-2. TIRE REPAIR.

Refer to TM 9-2610-200-14 for instructions on tire repair.

APPENDIX A
REFERENCES

A-1 . SCOPE.

This appendix lists all forms, field manuals, technical manuals, and other publications that are referenced in this manual and/or apply to the operation and to the Unit, Direct Support, and General Support maintenance of the M689, M832, and M840 Dolly Sets.

A-2. PUBLICATION INDEX.

DA Pam 25-30, Consolidated Index of Army Publications and Blank Forms, should be consulted frequently for the latest changes or revisions and for new publications relating to materiel covered in this technical manual.

A-3. FORMS.

Refer to DA Pam 738-750, The Army Maintenance Management System (TAMMS), for instruction on the use of maintenance forms.

Equipment Inspection and Maintenance Worksheet ..... DA Form 2404
Equipment Log Assembly (Records) ..... DA Form 2408
Maintenance Request ..... DA Form 2407
Preventive Maintenance Schedule and Record ..... DD Form 314
Processing and Reprocessing Record for Shipment, Storage and Issue of Vehicles and Spare Engines ..... DD Form 1397
product Quality Deficiency Report ..... SF Form 368
Recommended Changes to Equipment Technical Publications ..... DA Form 2028-2
Recommended Changes to Publications and Blank Forms ..... DA From 2028
Report of Discrepancy (ROD) ..... SF Form 364

A-4. FIELD MANUALS.

Army Motor Transport Units and Operations ..... FM 55-30
Basic Cold Weather Manual ..... FM 31-70
Desert Operations (How To Fight) ..... FM 90-3(HTF)
First Aid for Soldiers .....
Manual for the Wheeled Vehicle Driver ..... FM 21-305
NBC Decontamination ..... FM 3-5
Northern Operations ..... FM 31-71
Operation and Maintenance of Ordnance Materiel in Cold Weather (0 Degrees F to Minus 65 Degrees F) ..... FM 9-207

A-5. TECHNICAL BULLETINS.

Broke Fluid, Silicone (BFS) Conversion Procedures for Tank-Automotive Equipment ..... TB 43-0002-87
Color, Marking, and Camouflage Painting of Military Vehicles, Construction Equipment and Materials Handling Equipment ..... TB 43-0209
Tactical Wheeled Vehicles: Repair of Frames 9-2300-247-40

A-6. TECHNICAL MANUALS.

Inspection, Care and Maintenance of Antifriction Bearings ..... TM 9-214
Materials Used for Cleaning, Preserving, Abrading and Cementing Ordnance Materiel and Related Materials Including Chemicals ..... TM 9-247
Operator's Manual for Welding Theory and Application ..... TM 9-237
Operator's, Organizational, Direct Support and General Support Maintenance Manual Including Repair Parts List for Filler and Bleeder (EIS DIV Parker-Hannifin Corp., Model T3401GVT-01 (NSN 4910-00-273-3658) ..... TM 9-4910-709-14&P
Operator's, Unit, Direct Support and General Support Maintenance Manual for Care, Maintenance Repair and Inspection of Pneumatic Tires and Inner Tubes 9-2610-200-14
Painting Instructions for Army Materiel ..... TM 43-0139
Procedures for Destruction of Tank-Automotive Equipment to Prevent Enemy Use . . . . . TM 750-244-8
Railcar Loading Procedures ..... TM 55-801
Railway Operating and Safety Rules ..... TM 55-21
Storage and Materials Handling ..... TM 743-200-1

A-7. OTHER PUBLICATIONS.

Army Logistics Readiness and Sustainability ..... AR 700-138
Army Medical Department Expendable/Durable Items ..... CTA 8-100
Expendable/Durable Items (Except Medical, Class V, Repair Parts and Heraldic Items) CTA-50-970

APPENDIX B
MAINTENANCE ALLOCATION CHART

Section I. INTRODUCTION

B-1. GENERAL

a. This section provides a general explanation of all maintenance and repair functions authorized at the various maintenance levels.

b. The Maintenance Allocation Chart (MAC) in Section II designates overall authority and responsibility for the performance of maintenance functions on the identified end item or component. The application of the maintenance functions to the end item or component will be consistent with the capacities and capabilities of the designated maintenance levels.

c. Section Ill lists the tools and test equipment (both special tools and common tool sets) required for each maintenance function as referenced from Section Il.

d. Section IV contains supplemental instructions and explanatory notes for a particular maintenance function.

B-2. MAINTENANCE FUNCTIONS.

Maintenance functions will be limited to and defined as follows:

a. Inspect. To determine the serviceability of an item by comparing its physical, mechanical, and/or electrical characteristics with established standards through examination (e.g., by sight, sound, or feel).

b. Test. To verify serviceablity by measuring the mechanical, pneumatic, hydraulic, or electrical characteristii of an item and comparing those characteristics with prescribed standards.

c. Service. Operations required periodically to keep an item in proper operating condition, that is, to clean (includes decontaminate, when required), to preserve, to drain, to paint, or to replenish fuel, lubricants, chemical fluids, or gases.

d. Adjust. To maintain or regulate, within prescribed limits, by bringing into proper or exact position, or by setting the operating characteristics to specified parameters.

e. Aline. To adjust specified variable elements of an item to bring about optimum or desired performance.

f. Calibrate. To determine and cause corrections to be made or to be adjusted on instruments or test, measuring, and diagnostic equipment used in precision measurement. Consists of comparisons of two instruments, one of which is a certified standard of known accuracy, to detect and adjust any discrepancy in the accuracy of the instrument being compared.

g. Removed/Install To remove and install the same item when required to perform service or other maintenance functions. Install may be the act of emplacing, seating, or fixing into position a spare, repair part, or module (component or assembly) in a manner to allow the proper functioning of an equipment or system.

h. Replace. To remove an unserviceable item and install a serviceable counterpart in its place. “Replace” is authorized by the MAC and is shown as the third position of the Source, Maintenance, and Recoverability (SMR) code.

i. Repair The application of maintenance services, including fault location/troubleshooting, removal/ installation, and disassembly/assembly procedures and maintenance actions to identify troubles and restore serviceability to an item by correcting specific damage, fault, malfunction, or failure in a part, subassembly, module (component or assembly), end item, or system.

B-2. MAINTENANCE FUNCTIONS (Con't).

j. Overhaul. That maintenance effort (service/action) prescribed to restore an item to a completely serviceable/operational condition as required by maintenance standards inappropriate technical publications, such as a depot maintenance work requirement (DMWR). Overhaul is normally the highest degree of maintenance performed by the Army. Overhaul does not normally return an item to like-new condition.

k. Rebuild. Consists of those services/action necessary for the restoration of unserviceable equipment to a like-new condition in accordance with original manufacturing standards. Rebuild is the highest degree of material maintenance applied to Army equipment. The rebuild operation includes the act of returning to zero those age measurements (hours/miles, etc.) considered in classifying Army equiprnent/components.

B-3. EXPLANATION OF COLUMNS IN THE MAC, SECTION II.

a. Column 1. Group number. Column 1 lists functional group code numbers, the purpose of which is to identify maintenance-significant components, assemblies, subassemblies, and modules with the next higher assernbly. End item group number shall be "00."

b. Column 2. Component/Assembly. Column 2 contains the names of components, assemblies, subassemblies, and modules for which maintenance is authorized.

c. Column 3. Maintenance Functions. Column 3 lii the functions to be performed on the item listed in Column 2. (For a detailed explanation of these functions, refer to paragraph B-2.)

d. Column 4.Maintenance Level. Column 4 specifies, by the listing of a work time figure in the appropriate subcolumn(s), the level of maintenance authorized to perform the function lied in Column 3. This figure represents the active time required to perform that maintenance function at the indicated level of maintenance. If the number or complexity of the tasks within the listed maintenance function vary at different maintenance levels, appropriate work-time figures will be shown for each level. The work-time figure represents the average time required to restore an item (assembly, subassembly, component, module, end item, or system) to a serviceable condition under typical field operating conditions. This time includes preparation time (including any necessary disassembly/assembly time), troubleshooting/fault location time, and quality assurance/quality control time in addition to the time required to perform the specific tasks identified for the maintenance functions authorized in the MAC. The symbol designations for the various maintenance levels are as follows

c ..... Unit (Operator or Crew) Maintenance
0 ..... *Unit (Organizationa/) Maintenance*
F ..... *Direct Support Maintenance*
H ..... General Support *Maintenance*
D ..... *Depot Maintenance*

e. Column 5. Tools and Equipment. Column 5 specifies, by code, those common tool Sets (not individual tools), special tools, TMDE (test, measurement, and diagnostic equipment), and support equipment required to perform the designated function.

f. Column 6. Remarks. This column shall, when applicable, contain a letter code, in alphabetical order, which shall be keyed to the remarks contained in Section IV.

B-4. EXPLANATION OF COLUMNS IN TOOL AND TEST EQUIPMENT REQUIREMENTS, SECTION III.

a. Column 1. Tool or Test Equipment Reference Code. The tool or test equipment reference code correlates with a code used in the MAC, Section II, Column 5.

b. Column 2 Maintence level. The lowest level of maintenance authorized to use the tool or test equipment.

c. Column 3. Nomenclature. Name or identification of the tool or test equipment.

B-4. EXPLANATION OF COLUMNS IN TOOL AND TEST EQUIPMENT REQUIREMENTS, SECTION III (Con't)

d. **Column 4. National/NATO Stock Number.** The national or NATO stock number of the tool or test equipment.

e. **Column 5. Tool Number.** The manufacturer's part number.

B-5. EXPLANATION OF COLUMNS IN REMARKS, SECTION V.

a. **Column 1. Reference Code.** The code recorded in Column 6, Section II.

b. **Column 2. Remarks.** This column lists information pertinent to the maintenance function being performed as indicated in the MAC, Section II.

SECTION II. MAINTENANCE ALLOCATION CHART

(1)	(2)	(3)	(4) Maintenance Level					(5)	(6)
			Unit		DS	GS	Depot		
Group Number	Component/Assembly	Maintenance Function	C	O	F	H	D	Tools and Equipment	Remarks
06	**ELECTRICAL SYSTEM**								
0608	*Miscellaneous Items*								
	Box, Distribution	Inspect	0.2						
		Replace		1.0				1, 2	
		Repair		1.5				1, 2	
	Harness Wiring, Branched	Inspect	0.5						
		Replace		1.0				1, 2	
		Repair		2.0				1, 2	
0609	*Lights*	Inspect	0.2						
	Stoplight-Taillight	Replace		1.0				1, 2	
	Composite Stoplight-Taillight	Replace		1.0				1, 2	
		Repair		2.5				1, 2	A
10	**FRONT AXLE**								
1000	*Front Axle Assembly*	Adjust		0.2				1	D
		Inspect		0.5					
		Replace		8.0				1, 2	
	Link, Connecting	Replace		1.5				1, 2	
		Repair		8.0				1, 2	

SECTION II. MAINTENANCE ALLOCATION CHART (Con't)

(1) Group Number	(2) Component/Assembly	(3) Maintenance Function	(4) Maintenance Level: Unit C	Unit O	DS F	GS H	Depot D	(5) Tools and Equipment	(6) Remarks
1004	*Steering and Leaning Wheel Mechanism*								
	Tie-rod Assembly	Aline		0.5				1, 2	
		Replace		1.0				1, 2	
		Repair		1.5				1, 2	
	Knuckle, Steering	Replace		6.0				1, 2	
		Repair		6.0				1, 2	
11	**REAR AXLE**								
1100	*Rear Axle Assembly*	Replace		4.0				1, 2	
12	**BRAKES**								
1201	*Handbrakes*								
	Lever, Handbrake	Inspect	0.3						
		Service	0.1						
		Adjust	0.5						
		Replace	1.2					1, 2	
	Cable	Replace	3.0					1, 2	
1202	*Service Brakes*								
	Brakeshoes	Inspect		0.3				1, 2	
		Adjust		0.5				1, 2	
		Replace		1.0				1, 2	
1204	*Hydraulic Brake System*								
	Wheel Cylinder	Replace		1.0				1, 2	
	Master Cylinder	Service	0.4						
		Replace		2.5				1, 2	
	Hydraulic Brake Lines and Fittings	Replace		2.0				1, 2	
		Repair		2.0				1, 2	
1208	*Airbrake System*								
	Air Cylinder	Replace		1.0				1, 2	
		Repair		2.5				1, 2	

SECTION II. MAINTENANCE ALLOCATION CHART (Con't)

(1) Group Number	(2) Component/Assembly	(3) Maintenance Function	(4) Maintenance Level: Unit C	Unit O	DS F	GS H	Depot D	(5) Tools and Equipment	(6) Remarks
1208	*Airbrake System (Con't)*								
	Air Coupling	Replace		0.5				1, 2	
	Air Reservoir	Replace		1.0				1	
	Relay Valve	Replace		1.0				1	
	Air Hoses	Replace		2.0				1	
13	**WHEELS AND TRACKS**								
1311	*Wheel Assembly*								
	Wheel	Replace		0.5				1, 2	
	Hub	Replace		1.5				1, 2	
	Brakedrum	Replace		2.0				1, 2	
		Repair			1.0			1, 4	B
	Bearings, Wheel	Adjust		0.5				1, 2	
		Replace		0.7				1, 2	
	Seal, Grease	Replace		1.0				1, 2	
1313	*Tires, Tubes, Tire Chains*								
	Tires, Pneumatic	Service	0.2						
		Replace		0.5				1, 2	
		Repair			1.0				C
	Inner Tube	Replace		0.5				1, 2	
		Repair		0.5				1	C
15	**FRAME, TOWING ATTACHMENTS, DRAWBARS, AND ARTICULATION SYSTEMS**								
1501	*Frame Assembly*								
	Clamp Assembly, Transporter (M689 and M832)	Replace		1.0				1	

SECTION II. MAINTENANCE ALLOCATION CHART (Con't)

(1) Group Number	(2) Component/Assembly	(3) Maintenance Function	(4) Maintenance Level Unit C	Unit O	DS F	GS H	Depot D	(5) Tools and Equipment	(6) Remarks
1501	*Frame Assembly (Con't)*								
	Binder Assembly (M840)	Replace		1.0				1, 2	
	Toolbox and Platform Assembly	Replace Repair		2.0 3.5				1, 2 1, 2	
1503	*Pintles and Towing Attachments*								
	Drawbar Assembly	Inspect Replace Repair	0.1	 1.0 2.0				 1, 2	
	Positioning Lever (M832 and M840)	Repair		0.5				1	
1507	*Landing Gear, Leveling Jacks*								
	Jack, Lifting-leveling (M689)	Replace Repair		1.0 1.0				1 1, 2	
	Strut (M832 and M840)	Replace Repair		1.5 0.8				1 1	
16	**SPRINGS AND SHOCK ABSORBERS**								
1601	*Springs*								
	Air Spring	Service Replace		0.2 1.5				 1, 2	
1604	*Shock Absorber Equipment*								
	Shock Absorber	Inspect Replace	0.1	 1.5				 1	
1605	*Torque, Radius, and Stabilizer Rods*								
	Bar, Suspension, Front	Replace		10.0				1, 2, 10	D

SECTION II. MAINTENANCE ALLOCATION CHART (Con't)

(1) Group Number	(2) Component/Assembly	(3) Maintenance Function	(4) Maintenance Level: Unit C	Unit O	DS F	GS H	Depot D	(5) Tools and Equipment	(6) Remarks
1605	*Torque, Radius, and Stabilizer Rods (Con't)*								
	Bar, Suspension, Rear	Replace		10.0				1, 2, 10	D
	Rod, Alining	Replace		8.0				1, 2	
	Bar, Stabilizer, Rear	Replace		0.5				1, 2	
	Bar, Stabilizer, Front	Replace		0.5				1, 2	
	Rear Axle Yoke and Mounting Bracket	Replace		10.0				1, 2, 10	D
	Front Axle Yoke and Mounting Bracket	Replace		10.0				1, 2, 10	D
	Caster Assembly	Service		0.1				2	D
		Repair		0.2				1	D
22	**BODY, CHASSIS, AND HULL ACCESSORY ITEMS**								
2202	*Accessory Items*								
	Reflectors	Replace		0.1				1	
2210	*Data Plates and Instruction Holders*								
	Data Plates	Replace		0.3				1, 2	
	Adhesive Labels	Replace		0.2				1	D
24	**HYDRAULIC AND FLUID SYSTEMS**								
2401	*Pump and Motor*								
	Pump, Hydraulic (M832 and M840)	Adjust		0.7				2, 7, 8	D
		Service		0.1					
		Replace		2.3				1, 2	
		Repair		2.8				1, 8	

SECTION II. MAINTENANCE ALLOCATION CHART (Con't)

(1)	(2)	(3)	(4) Maintenance Level					(5)	(6)
			Unit		DS	GS	Depot		
Group Number	Component/Assembly	Maintenance Function	C	O	F	H	D	Tools and Equipment	Remarks
2406	*Strainers, Filters, Lines, and Fittings, etc.*								
	Hoses and Fittings, Hydraulic (M832 and M840)	Inspect Replace	0.2	2.3				1	
2407	*Hydraulic Cylinders*								
	Cylinder, Hydraulic (M832 and M840)	Replace		2.0				1, 2	
	Boot, Cylinder	Replace		1.0				1, 2	D

SECTION III. TOOL AND TEST EQUIPMENT REQUIREMENTS

(1)	(2)	(3)	(4)	(5)
TOOL OR TEST EQUIPMENT REFERENCE CODE	MAINTENANCE LEVEL	NOMENCLATURE	NATIONAL/NATO STOCK NUMBER	TOOL NUMBER
1	O	TOOL KIT, GENERAL MECHANIC'S, AUTOMOTIVE	5180-00-177-7033	
2	O	SHOP EQUIPMENT, AUTOMOTIVE MAINTENANCE AND REPAIR: ORGANIZATIOAL MAINTENANCE, COMMON NO. 1, LESS POWER	4910-00-754-0654	
3	O	TOOL KIT, WELDER'S	5180-00-754-0661	
4	F	SHOP EQUIPMENT, AUTOMOTIVE MAINTENANCE AND REPAIR: FIELD MAINTENANCE, SUPPLEMENTAL NO.1	4910-00-754-0706	
5	F	SHOP EQUIPMENT, WELDING, FIELD MAINTENANCE	3470-00-357-7268	
6	O	SIMPLIFIED TEST EQUIPMENT FOR INTERNAL COMBUSTION ENGINES	4910-01-22-6589	12259266
7	O	GAGE, HYDRAULIC 0-6000 psi		151469
8	O	BUSHING, PIPE	4730-00-014-1539	
9	O	TOOL, SEAL INSERTING (PART OF HYDRAULIC PUMP REPAIR KIT)		CP13-44
10	O	SPACERS, FABRICATED STEEL (REFER TO APPENDIX G)		

Section IV. REMARKS

(1) Reference Code	(2) Remarks
A	Composite stoplight-taillight repair is limited to door, preformed packing, and lamp/LED replacement.
B	Brakedrum repair is limited to refacing braking surface using a brakedrum lathe.
C	Refer to TM 9-2610-200-14 for tire and tube repair.
D	M832 SN J089-001 thru 159 and J017-160 thru 350 only.

APPENDIX C
COMPONENTS OF END ITEM AND BASIC ISSUE ITEMS LIST

Section 1. INTRODUCTION

C-1. SCOPE.

This appendix lists Components of End Item and Basic Issue Items for the M689, M832, and M840 Dolly Sets to help you inventory items required for safe and efficient operation.

C-2. GENERAL.

Section II of this appendix is Components of End Item, and Section III is Basic Issue Items:

a. **Section II. Components of End Item.** This listing is for informational purposes only, and is not authority to requisition replacements. These items are part of the end item, but are removed and separately packaged for transportation or shipment. As part of the end item, these items must be with the end item whenever it is issued or transferred between property accounts. illustrations are furnished to assist you in identifying the items.

b. **Section III. Basic Issue Items.** These are the minimum essential items required to place the dolly set in operation, to operate it, and to perform emergency repairs. Although shipped separately packaged, Bsic Issue Items (BII) must be with the doily set during operation and whenever it is transferred between property accounts. The illustrations will assist you with hard-to-indentify items. This manual is your authority to request/requisition replacement 611, based on Table of Organization and Equipment./Modification Table of Organization and Equipment (TOE/MTOE) authorizations of the end item.

C-3. EXPLANATION OF COLUMNS.

The following provides an explanation of the columns found in the tabular listing.

a. **Column (1) - Illus Number (Illustration Number).** This column indicates the number of the illustration in which the item is shown.

b. **Column (2) - National Stock Number** Indicates the National Stock Number (NSN) that is assigned to the item and will be used for requisitioning purposes.

c. **Column (3) - Description, CAGEC and Part Number** Indicates the Federal item name and, if required, a description to identify and locate the item. The last line for each entry indicates the Commercial and Government Entity Code (CAGEC) in parentheses, followed by the part number. If the item needed differs for different models of the equipment, the model is listed under the *Usable on Code* heading in this column.

Code	Used On
C12	M832
151	M840
265	M689

C-3. EXPLANATION OF COLUMNS (Con't).

d. **Column (4) - U/M (Unit of Measure).** Indicates the measure used in performing the actual operational/ maintenance function. This measure is expressed by a two-character alphabetical abbreviation (e.g., es = each).

e. **Column (5) - Qty Req'd (Quantity Required).** Indicates the quantity of the item authorized to be used with/in the equipment.

Section II. COMPONENTS OF END ITEM

The M689, M832, and M840 Dolly Sets currently do not have any Components of End item assigned.

Section III. BASIC ISSUE ITEMS

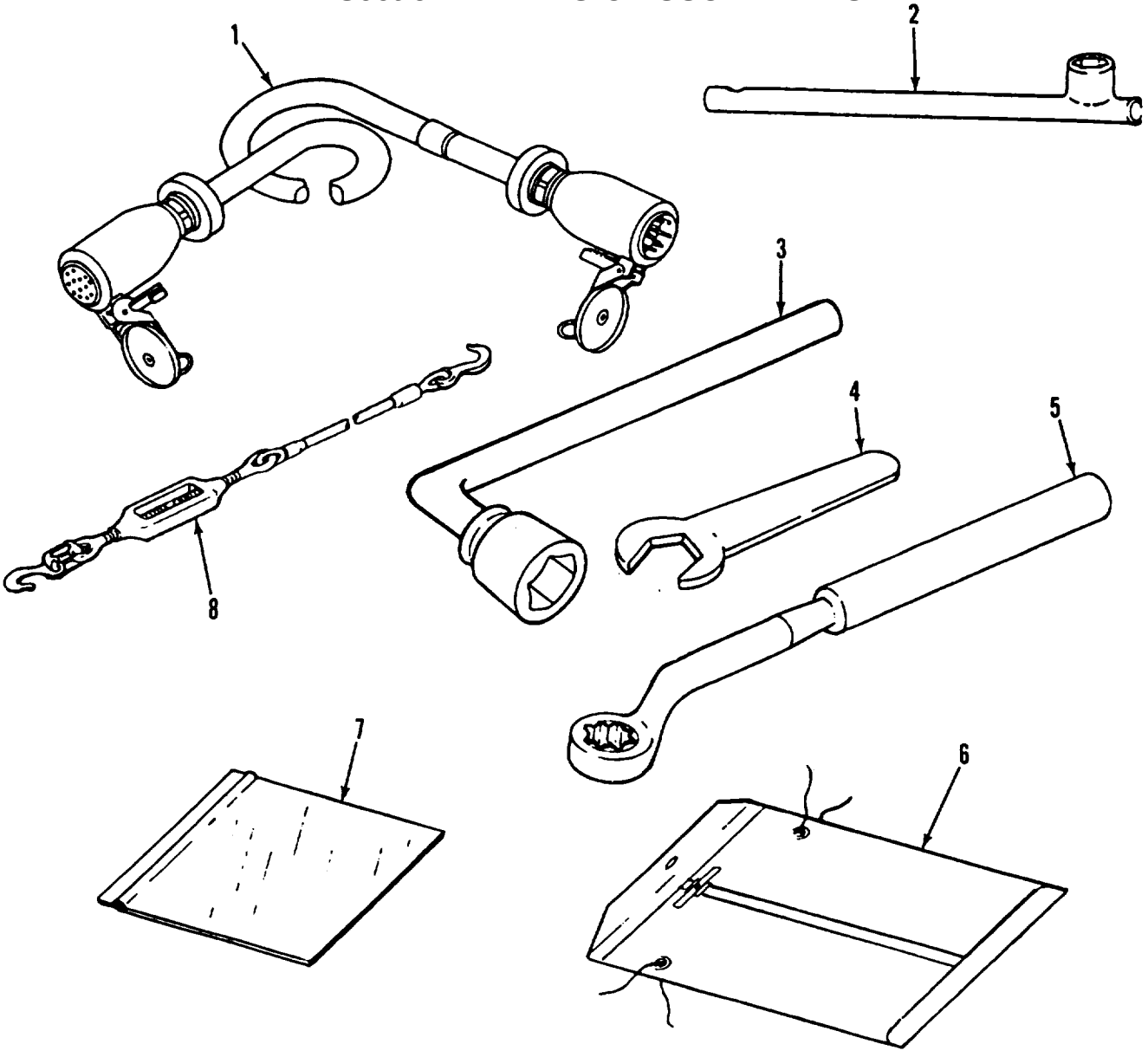

SECTION III. BASIC ISSUE ITEMS (CON'T)

(1) ILLUS NUMBER	(2) NATIONAL STOCK NUMBER	(3) DESCRIPTION CAGEC AND PART NUMBER	USABLE ON CODE	(4) U/M	(5) QTY REQ'D
1	6150-00-902-2310	CABLE ASSEMBLY, INTERVEHICULAR (19207) 11588325	C12, 151, 265	EA	1
2	5340-01-094-9007	HANDLE, MANUAL CONTROL (19207) 11602354	151	EA	2
3	5120-00-224-2536	WRENCH, OFFSET (19207) 11669681	C12	EA	1
4	5120-00-203-4810	WRENCH, OPEN END (30106) 1236	C12	EA	1
5	5340-00-930-5669	PUMP HANDLE AND WRENCH (19207) 11682385	C12	EA	2
6	8105-00-678-6198	ENVELOPE, PACKAGING (19207) 7346105	C12	EA	1
7	8105-00-837-7757	BAG, PLASTIC (19207) 11669682	C12	EA	1
8	4010-01-389-5862	CABLE ASSEMBLY (19207) 12362752	C12	EA	2

APPENDIX D
ADDITIONAL AUTHORIZATION LIST

The M689, M832, and M840 Dolly Sets currently do not have an Additional Authorization List assigned.

APPENDIX E
EXPENDABLE/DURABLE SUPPLIES AND MATERIALS LIST

Section I. INTRODUCTION

E-1. SCOPE.

This appendix lists expendable/durable supplies and materials you will need to operate and maintain the M689, M832, and M840 Dolly Sets. This listing is for informational purposes only and is not authority to requisition the listed items. These items are authorized to you by CTA 50-970, *Expendable/Durable Items (Except Medical, Class V, Repair Parts and Heraldic Items), or CTA8-100, Army Medical Department Expendable/Durable Items.*

E-2. EXPLANATION OF COLUMNS.

a. **Column (1) - Item Number.** This number is assigned to the entry in the listing and is referenced in the "Initial Setup" of maintenance paragraphs or narrative instructions to identify the material needed (e.g., Dry cleaning solvent, Item 14, Appendix E).

b. **Column (2) - Level.** This column identifies the lowest level of maintenance that requires the listed item.

C - Operator/Crew
O - Unit Maintenance
F - Direct Support Maintenance
H - General Support Maintenance

c. **Column (3) - National Stock Number.** This is the national stock number assigned to the item; use it to request or requisition the item.

d. **Column (4) Description, (CAGEC) Part Number.** indicates the Federal item name and, if required, a description to identify the item. The last line for each entry indicates the Commercial and Government Entity Code (CAGEC) in parentheses followed by the part number, if applicable.

e. **Column (5) - U/M (Unit of Measure).** Indicates the measure used in performing the actual maintenance function. This measure is expressed by a two-character alphabetical abbreviation: ea = each, ft = foot, gl = gallon, in. = inch, lb= pound, oz = ounce, pt = pint, qt = quart, tu = tube, yd = yard. If the unit of measure differs from the unit of issue, requisition the lowest unit of issue that will satisfy your requirements.

SECTION II. EXPENDABLE SUPPLIES AND MATERIALS LIST

(1)	(2)	(3)	(4)	(5)
ITEM NUMBER	LEVEL	NATIONAL STOCK NUMBER	DESCRIPTION (CAGEC) PART NUMBER	U/M
1	O		ADHESIVE (81348) MMM-A-180	
		8040-00-754-2483	8 OUNCE BOTTLE	OZ
2	O		ADHESIVE, GENERAL PURPOSE, TYPE II (81348) MMM-A-1617	
		8040-00-664-4318	1 PINT CAN	PT
3	O		BARRIER MATERIAL, GREASEPROOF-WATERPFOOFED, FLEXIBLE (81349) MIL-B-121	
		8135-00-171-0930	100 YARD ROLL	YD
4	C		DETERGENT, GENERAL PURPOSE LIQUID (81349) MIL-D-16791	
		7930-00-282-9699	1 GALLON CAN	GL
5	C		FLUID, BRAKE, SILICONE, AUTOMOTIVE (81349) MIL-B-46176	
		9150-01-102-9455	1 GALLON CAN	GL
		9150-01-123-3152	5 GALLON CAN	GL
		9150-01-072-8379	55 GALLON DRUM	GL
6	C		FLUID, HYDRAULIC, PETROLEUM BASE (81349) MIL-H-5606 (OHA)	
		9150-00-252-6383	1 QUART CAN	QT
		9150-00-223-4134	1 GALLON CAN	GL
			(81349)MIL-H-6083 (OHT)	
		9150-00-935-9807	1 QUART CAN	QT
		9150-00-935-9808	1 GALLON CAN	GL
7	O		GREASE, AUTOMOTIVE AND ARTILLERY (81349) MIL-G-10924	
		9150-00-935-1017	14 OUNCE CARTRIDGE	OZ
		9150-00-190-0904	1.75 POUND CAN	LB
		9150-00-190-0905	6.50 POUND CAN	LB
8	C		OIL, LUBRICATING, GENERAL PURPOSE, PL-M (81349) MIL-L-3150	
		9150-00-231-2361	1 QUART CAN	QT

SECTION II. EXPENDABLE SUPPLIES AND MATERIALS LIST

(1)	(2)	(3)	(4)	(5)
ITEM NUMBER	LEVEL	NATIONAL STOCK NUMBER	DESCRIPTION (CAGEC) PART NUMBER	U/M
9	C		OIL, LUBRICATING, GENERAL PURPOSE, PRESERVATIVE, PL-S (81348) VV-L-800	
		9150-00-231-6689	1 QUART CAN	QT
10	O	8010-01-229-7540	POLYURETHANE COATING, BLACK (80244)MIL-C-53039	
			1 QUART CAN	QT
11	C		RAG, WIPING (58536) A-A-531	
		7920-00-205-1711	50 POUND BALE	LB
12	O		SEALING COMPOUND (05970) 85-12 (MIL-S-22473)	
		8030-00-058-5398	2 CUBIC CENTIMETER TUBE	TU
13	O		SOLDER, LEAD ALLOY (81348) QQ-S-571	
		3439-00-265-7102	1 POUND ROLL	LB
14	C		SOLVENT, DRY CLEANING (81346) ASTM D 235 TY1 (P-D-680)	
		6850-00-664-5685	1 QUART CAN	QT
		6850-00-281-1985	1 GALLON CAN	GL
		6850-00-285-8011	55 GALLON DRUM	GL
15	O		STRAP, TIE-DOWN, ELECTRICAL COMPONENTS (96906) MS3367-1-9	
		5975-00-074-2072	BOX OF 100	EA
16	O		TAG, MARKER (81349) MIL-T-12755	
		9905-00-537-8954	50 EACH	EA

SECTION II. EXPENDABLE SUPPLIES AND MATERIALS LIST

(1)	(2)	(3)	(4)	(5)
ITEM NUMBER	LEVEL	NATIONAL STOCK NUMBER	DESCRIPTION (CAGEC)PART NUMBER	U/M
17	O		TAPE, ANTISEIZING	
			1/4 INCH WIDE (71643) TEMPRTH	
		8030-00-067-7368	54 FEET LONG	FT
			1/2 INCH WIDE (81349) 4B	
		8030-00-889-3535	260 INCHES LONG	IN.
18	O		TAPE, MASKING (16274) Q101	
		8135-01-055-1857	0.625 INCH WIDE	FT
19	O		WIRE, NONELECTRICAL (96906) MS20995N51	
		9525-00-618-5462	0.051 INCH DIAMETER	LB

APPENDIX F
REPAIR PARTS AND SPECIAL TOOLS LIST

Section I. INTRODUCTION

F-1 . SCOPE.

This RPSTL lists and authorizes apares and repair parts; special tools; special test, measurement, and diagnostic equipment (TMDE); and other special support equipment required for performance of organizational, direct support, and general support maintenance of the Doll Set, Lift, Transportable Shelter. It authorizes the requisitioning, issue, and disposition of spares, repair parts end special tools as indicated by the source, maintenance and recoverability (SMR) codes.

F-2. GENERAL.

In addition to Section I, *Introduction,* this Repair Parts and Special Tools List is divided into the following sections:

a. **Section II. Repair Parts List.** A list of spares end repair parts authorized by this RPSTL for use in the performance of maintenance. The list also includes parts which must be removed for replacement of tha authorized parts. Parts lists are composed of functional groups ascending alphanmeric sequence, with the parts in each group listed in ascending figure end item number sequence. Bulk materiels are listed in item name sequence. Repair parts kits are listed separately in their own functional group within Section II. Repair parts for reparable special tools are also listed in this section. items listed are shown on the associated illustration(s)/figure(s).

b. **Section III. Special Tools List.** A list of special tools, special TMDE, and other special support equipment authorized by this RPSTL [as indicated by Basis of issue (BOI) information in the *DESCRIPTION AND USABLE ON CODE* column] for the performance of maintenance.

c. **Section IV. Cross-reference Indexes.** A list, in National item identification Number (NIIN) sequence, of all National stock numbered items appearing in the listing, followed by a list in alphanumeric sequence of all part numbers appearing in the listings. National stock numbers and part numbers are cross-referenced to each illustration/figure and item number appearance. The figure and item number index lists figure and item numbers in alphanumeric sequence and cross-references NSN, CAGE, end part numbers.

F-3. EXPLANATION OF COLUMNS (SECTIONS II AND III).

a. **ITEM NO. [Column (1)].** Indicates the number used to identify items called out in the illustration.

b. **SMR CODE [Column (2)].** The Source, Maintenance, and Recoverability (SMR) code is a 5-position code containing supply/requisitioning information, maintenance category authorization criteria, and disposition instruction, as shown in the following breakout

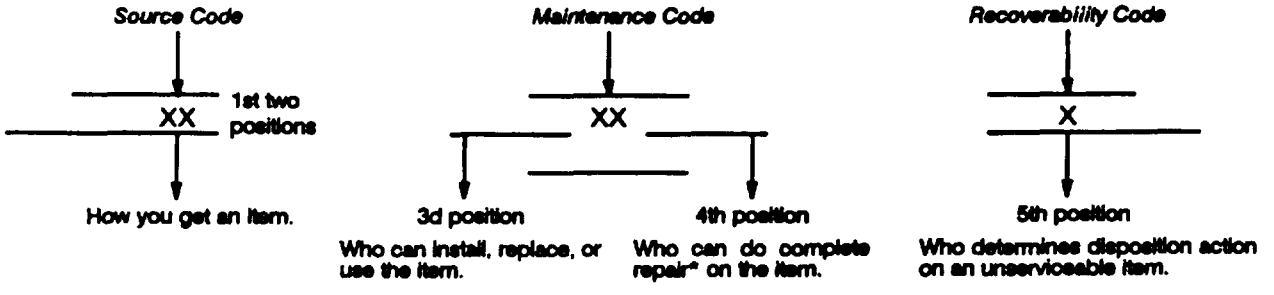

* *Complete Repair:* Maintenance capacity, capability, and authority to perform all corrective maintenance tasks of the *"Repair"* function in a use/user environment in order to restore serviceability to a failed item.

F-3. EXPLANATION OF COLUMNS (SECTIONS II AND III) (Con't).

(1) **Source Code.** The source code tells you how to get an item needeed for maintenance, repair, or overhaul of an end item/equipment. Explanations of source codes follow:

Code	Application/Explanation
PA PB PC** PD PE PF PG	Stocked items; use the applicable NSN to request/requisition items with these source codes. They are authorized to the category indicated by the code entered in the 3d position of the SMR code. *** Items coded PC are subject to deterioration.*
KD KF KB	Items with these codes are not to be requested/requisitioned individually. They are part of a kit which is authorized to the maintenance category indicated in the 3d position of the SMR code. The complete kit must be requisitioned and applied.
MO - Made at UM/AVUM Level *MF - Made at DS/AVUM Level* *MH - Made at GS Level* *MD - Made at Depot*	Items with these codes are not to be requested/requisitioned individually. The parts that make up the assembled item must be requisitioned or fabricated and assembled at the level of maintenance indicted by the source code. If the 3d position code of the SMR code authorizes you to replace the item, but the source code indicates that the item is assembled at a higher level, order the item from the higher level of maintenance.
AO - Assembled by UM/ AVUM Level *AF - Assembled by DS/ AVUM Level* *AH - Assembled by GS Level* *AD - Assembled at Depot*	Items with these codes are not to be requested/requisitioned individually. The parts that make up the assembled item must be requisitioned or fabricated and assembled at the level of maintenance indicted by the source code. If the 3d position code of the SMR code authorizes you to replace the item, but the source code indicates that the item is assembled at a higher level, order the item from the higher level of maintenance.

NOTE

Cannibalization or controlled exchange, when authorized, may be used as a source of supply for items with the following source codes, except for those source coded "XA."

XA - DO NOT requisition an "XA"-coded item. Order its next higherr assembly.

XB - If an "XB" item is not available from salvage, order it using the CAGE and part number given.

F-3. EXPLANATION OF COLUMNS (SECTIONS II AND III (Con't).

XC - Installation drawing, diagram, instruction sheet, field service drawing, that is identified by manufacturer's part number.

XD - Item is not stocked. Order an "XD"-coded item through normal supply channels using the CAGE and part number given, if no NSN is available.

(2) **Maintenance Code.** Maintenance codes tell you the level(s) of maintenance authorized to use and repair support items. The maintenance codes are entered in the third and fourth positions of the SMR code as follows:

(a) The maintenance code entered in the third position tells you the lowest maintenance level authorized to remove, replace, and use an item. The maintenance code entered in the third position will indicate authorization to one of the following levels of maintenance.

Code	*Application/Explanation*
C	- Crew or operator maintenance done within unit maintenance or aviation unit maintenance.
O	- Unit maintenance or aviation unit can remove, replace, and use the item.
F	- Direct support or aviation intermediate level can remove, replace, and use the item.
H	- General support level can remove, replace, and use the item.
L	- Specialized repair activity can remove, replace, and use the item.
D	- Depot level can remove, replace, and use the item.

NOTE

Some limited repair may be done on the item at a lower level of maintenance, if authorized by the Maintenance Allocation Chart (MAC) and SMR codes.

(b) The maintenance code entered in the fourth position tells whether or not the item is to be repaired and identifies the lowest maintenance level with the capability to do complete repair (i.e., perform all authorized *"Repair"* functions). This position will contain one of the following maintenance codes:

Code	*Application/Explanation*
O	- Unit maintenance or aviation unit is the lowest level that can do complete repair of the item.
F	- Direct support or aviation intermediate is the lowest level than can do complete repair of the item.
H	- General support is the lowest level that can do complete repair of the item.
L	- Specialized repair activity is the lowest level that can do complete repair of the item.
D	- Depot is the lowest level that can do complete repair of the item.
Z	- Nonreparable. No repair is authorized.
B	- No repair is authorized. (No parts or special tools are authorized for the maintenance of a "B"-coded item.) However, the item may be reconditioned by adjusting, lubricating, etc., at the user level.

F-3. EXPLANATION OF COLUMNS (SECTIONS II AND III) (Con't).

(3) **Recoverability Code.** Recoverabllity codes are assigned to items to indicate the disposition action on unserviceable items. The recoverability code is entered In the fifth position of the SMR coda as follows:

Code	*Application/Explanation*
Z	- Nonreparable item. When unserviceable, condemn and dispose of the item at the level of maintenance shown in the 3d position of the SMR code.
O	- Reparable item. When uneconomically reparable, condemn and dispose of the item at unit maintenance or aviation unit level.
F	- Reparable item. When uneconomically reparable, condemn and dispose of the item at the direct support or aviation intermediate level.
H	- Reparable item. when uneconomically reparable, condemn and dispose of the item at the general support level.
D	- Reparable item. When beyond lower level repair capability, return to depot. Dondemnation and disposal of item not authorized below depot level.
L	- Reparable item. Condemnation and disposal of item not authorized below specialized repair activity (SRA).
A	- Item requires special handling or condemnation procedures because of specific reasons (e.g., orecuiys metal content, high dollar value, critical material, or hazardous material). Refer to appropriate manuals/directives for specific instructions.

c. **CAGEC [Column (3)].** The Commercial and Government Entity (CAGE) Code (C) is a 5-digit alphanumeric code which is used to identify the manufacturer, distributor, or Government agency, etc., that supplies the item.

NOTE

When you use NSN to requisition an item, the item you receive may have a different part number from the part ordered.

d. **PART NUMBER [Column (4)].** Indicates the primary number used by the manufacturer (individual, company, firm, corporation, or Government activity), which controls the design and characteristics of the item by means of its engineering drawings, specifications standards, and inspection requirements to identify an item or range of items.

e. **DESCRIPTION AND USABLE ON CODE (UOC) [Column (5)].** This column includes the following information:

(1) The Federal item name and, when required, a minimum description to identify the item.

(2) Physical security classification. Not Applicable.

(3) items that are included in kits and sets are listed below the name of the kit or set on Figure KIT.

(4) Spare/repair parts that makeup an assembled item are listed immediately following the assembled item line entry.

(5) Part numbers for bulk materiels are referenced in this column in the line item entry for the item to b manufactured/fabricated.

(6) When the item is not used with all serial numbers of the same model, the effective serial numbers are shown on the last line(s) of the description (before UOC). Not Applicable.

(7) The usable on code, when applicable (see paragraph F-5, Special information).

F-3. EXPLANATION OF COLUMNS (SECTIONS II AND III (Con't).

(8) In the Special Tools List section, the Basis of Issue (BOI) appears as the last line(s) in the entry for each special tool, special TMDE, and other special support equipment. When density of equipments supported exceeds density spread indicated in the Basis of Issue, the total authorization is increased proportionately.

(9) The statement"END OF FIGURE" appears just below the last item description in Column 5 for a given figure in both section II and Section III.

f. **QTY [Column (6)].** The *QTY* (quantity per figure) column indicates the quantity of the item used in the breakout shown on the illustration/figure, which is prepared for a functional group, subfunctional group, or an assembly. A "V" appearing in this colunm in lieu o fa quantity indicates that the quantity Invariable and the quantity rnay vary from application to application.

F-4. EXPLANATION OF COLUMNS (SECTION IV).

a. **National stock Number (NSN) Index.**

(1) *STOCK NUMBER* **column.** This column lists the NSN by National Item Identification Number (NIIN) sequence. The NIIN consists of the last nine digits of the NSN (i.e., 5305-01-674-1467). When using this column to locate an item, ignore the first 4 digits of the NSN. However, the complete NSN should be used when ordering items by stock number.

(2) *FIG.* **column.** This column lists the number of the figure where the item is identified/located. The figures are in numerical order in Section II and Section Ill.

(3) *ITEM* **column.** The item number identifies the item associated with the figure listed in the adjacent FIG. column. This item is also identified by the NSN listed on the same line.

b. **Part Number Index.** Part numbers in this Index are listed by part number In ascending alphanumeric sequence (i.e., vertical arrangement of letter and number combination which places the first letter or digit of each group in order A through Z, followed by the numbers O through 9 and each following letter or digit in like order).

(1) *CAGEC* **column.** The Commercial and Government Entity (CAGEC) Code (C) is a 5-digit alphanumeric code used to identify the manufacturer, distributor, or Government agency, etc., that supplies the item.

(2) *PART NUMBER* **column.** Indicates the primary numbr used by the manufacturer (individual, firm, corporation, or Government activity), which controls the design and characteristics of the item by means of its engineering drawings, specifications standards and inspection requirements to identify an item or range of items.

(3) *STOCK NUMBER* **column.** This column lists the NSN for the associated part number and manufacturer identified in the PART NUMBER and CAGE columns to the left.

(4) *FIG.* **column.** This column lists the number of the figure where the item is identified/located in Section II and Section III.

(5) *ITEM* **column.** The item number is that number assigned to the item as it appears in the figure referenced in the adjacent figure number column.

c. **Figure and Item Number Index.**

(1) *FIG.* **column.** This column lists the number of the figure where the item is identified/located in sections II and III.

(2) *ITEM* **column.** The Item number is that number assigned to the Item as it appears in the figure referenced in the adjacent figure number column.

(3) *STOCK NUMBER* **column.** This column lists the NSN for the item.

F-4. EXPLANATION OF COLUMNS (SECTION IV) (Con't).

(4) *CAGEC* **column.** The Commercial and government Entity (CAGE) Code (C) is a 5-digit alphanumeric code used to identify the manufacturer, distributor, or Government agency, etc., that supplies the item.

(5) *PART NUMBER* **column** indicates the primary number used by the manufacturer (individual, firm, corporation, or Government activity), which controls the design and characteristics of the item by means of its engineering drawings, specifications standards end inspection requirements to identify an item or range of items.

F-5. SPECIAL INFORMATION.

a. **Usable On Code.** The usable on code appears in the lower left corner of the Description colun heading. Usable on codes are shown as "UOC:. . . . . " in the Description column (justified left) on the first line applicable item description/nomenclature. Uncoded items are applicable to all models. Identification of the usable on codes used in this RPSTL are:

Code	*Used On*
C12	M832
151	M840
265	M689

b. **Fabrication Instructions.** Bulk materiels required to manufacture items are listed in the Bulk Materiel Functional Group of this RPSTL. Part numbers for bulk materiels are also referenced in the DESCRIPTION column of the line item entry for the item to be manufactured/fabricated. Detailed fabrication instructions for items source coded to be manufactured or fabricated are found in *Appendix G* of this manual.

c. **Assembly Instructions.** Detailed assembly insturctions for items source coded to be assembled from component spare/repair parts are found in *Chapters 4* and *5* of this manual. Items that make up the assembly are listed immediately following the assembly item entry or reference is made to an applicable figure.

d. **Kits.** Line item entries for repair parts kits appear in group 9401 in Section II.

e. **Index Numbers.** Items which have the word BULK in the FIG. column will have an index number shown in the item column. This index number is a cross-reference between the National Stock Number/Part Number Index and the bulk material list in Section II.

F-6. HOW TO LOCATE REPAIR PARTS.

a. **When National Stock Number or Part Number is Not Known:**

(1) **First.** Using The Table of Contents, determine the assembly group or subassembly group to which the Item belongs. This is necessary since figures are prepared for assembly groups and subassembly groups, and listings are divided into the same groups.

(2) **Second.** Find the figure covering the assembly group or subassembly group to which the item belongs.

(3) **Third.** Identify the item on the figure and use the Figure and Item Number index to find the NSN.

b. **When National Stock Number or Part Number Is Known:**

(1) **First** Using the National Stock Number or Part Number index, find the pertinent National Stock Number or Part Number. The NSN Index is in National Item Identification Number (NIIN) sequence [see paragraph F-4.a(1)]. The part-em in the Part Number index are listed in ascending alphanumeric sequence
F-4.b). Both indexes cross-reference you to the illustration/figure and item number of the item you are looking for.

(2) **Second.** Turn to the figure and item number, verify mat the item is the one you're looking for, then locate the item number in the repair parts list for the figure.

F-7. ABBREVIATIONS.

For standard abbreviations see MIL-STD-12D, *Military Standard Abbreviations for Use on Drawings, Specifications, Standards and In Technical Documents.*

Abbreviations	***Explanation***
NIIN	National Item Identification Number (consists of the last 9 digits of the NSN)
RPSTL	Repair Parts and special Tools List

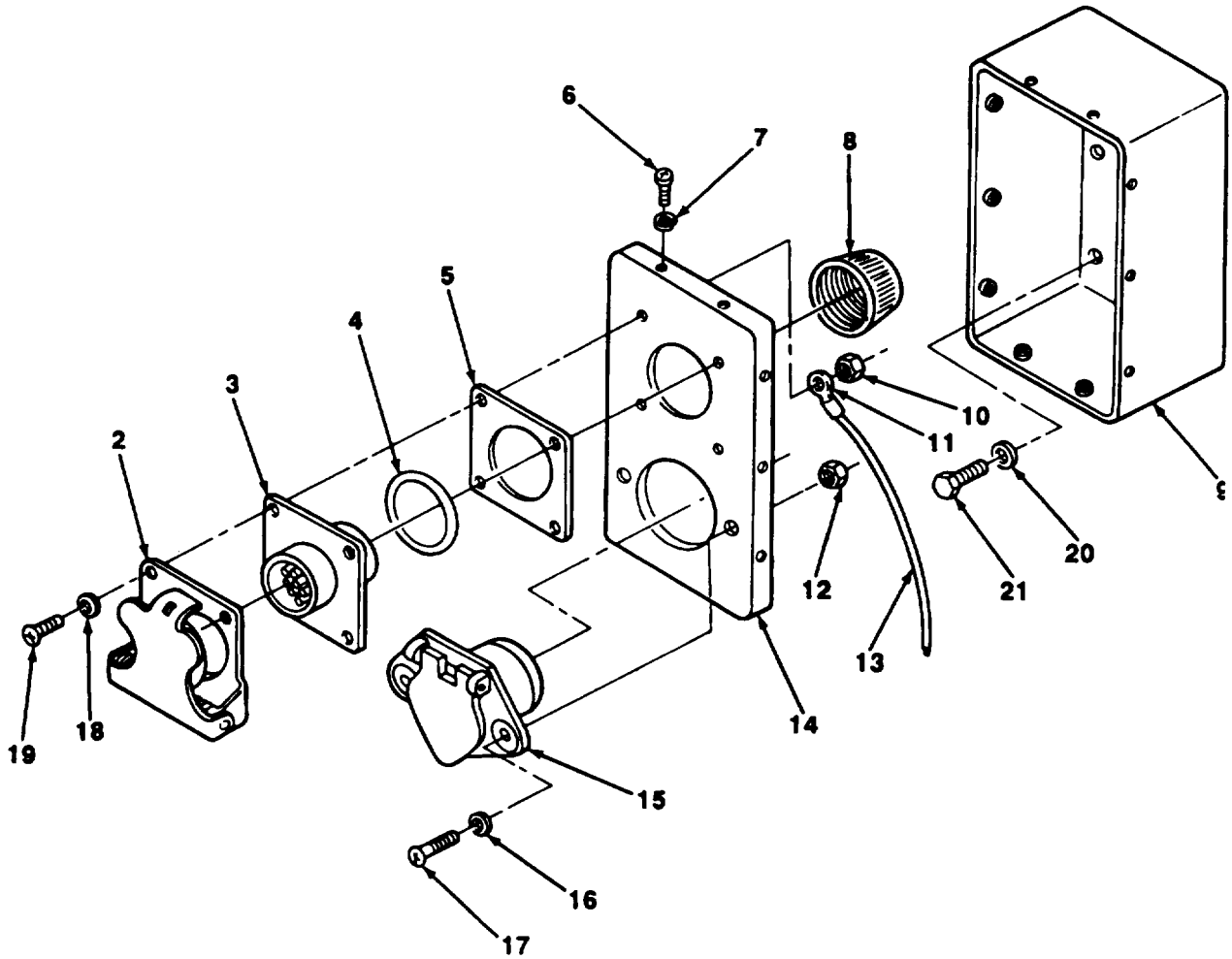

FIGURE 1. DISTRIBUTION BOX, FRONT (M689, M840).

(1) ITEM NO	(2) SMR CODE	(3) CAGEC	(4) PART NUMBER	(5) DESCRIPTION AND USABLE ON CODES (UOC)	(6) QTY
				GROUP 06 ELECTRICAL SYSTEM GROUP 0608 MISCELLANEOUS ITEMS FIG. 1 DISTRIBUTION BOX, FRONT (M689, M840)	
1	PAOZZ	19207	11588320	DISTRIBUTION BOX UOC:151,265	1
2	PAOZZ	19207	7731428	COVER,ELECTRICAL CO PART OF PN11588320 UOC:151,265	1
3	PAOZA	96906	MS75021-1	CONNECTOR,RECEPTACL PART OF PN11588320 UOC:151,265	1
4	PAOZZ	19207	7722333	BUSHING,NONMETALLIC PART OF PN11588320 UOC:151,265	1
5	PAOZZ	19207	7525965	GASKET PART OF PN11588320 UOC:151,265	1
6	PAOZZ	96906	MS51957-30	SCREW,MACHINE PART OF PN11588320 UOC:151,265	10
7	PAOZZ	96906	MS35338-136	WASHER,LOCK PART OF PN 11588320 UOC:151,265	10
8	PAOZZ	19207	7723309	NUT,PLAIN,KNURLED PART OF PN11588320 UOC:151,265	1
9	XAOZZ	19207	11588315-2	BOX,JUNCTION PART OF PN11588320 UOC:151,265	1
10	PAOZZ	96906	MS51971-1	NUT,PLAIN,HEXAGON PART OF PN11588320 UOC:151,265	4
11	PAOZZ	96906	MS25036-106	TERMINAL,LUG PART OF PN11588320 UOC:151,265	7
12	PAOZZ	96906	MS51971-2	NUT,PLAIN,HEXAGON PART OF PN11588320 UOC:151,265	2
13	MOOZZ	81349	M13486-1-5-8	CABLE MAKE FORM CABLE PN M13486-1-5, 8 INCHES LONG UOC:151,265	1
14	XAOZZ	19207	11588317	COVER,JUNCTION BOX PART OF PN11588320 UOC:151,265	1
15	PAOZA	12339	76D05086	CONNECTOR,RECEPTACL PART OF PN11588320 UOC:151,265	1
16	PAOZZ	96906	MS35338-140	WASHER.LOCK PART OF PN11588320 UOC:151,265	2
17	PAOZZ	96906	MS51957-96	SCREW,MACHINE PART OF PN11588320 UOC:151,265	2
18	PAOZZ	96906	MS35338-139	WASHER,LOCK PART OF PN11588320 UOC:151,265	4
19	PAOZZ	96906	MS51957-81	SCREW,MACHINE PART OF PN 11588320 UOC:151,265	4

(1) ITEM NO	(2) SMR CODE	(3) CAGEC	(4) PART NUMBER	(5) DESCRIPTION AND USABLE ON CODES (UOC)	(6) QTY
20	PAOZZ	96906	MS15795-710	WASHER,FLAT PART OF PN11588320 UOC:151,265	4
21	PAOZZ	96906	MS51957-81	SCREW,MACHINE PART OF PN11588320 UOC:151,265	4

END OF FIGURE

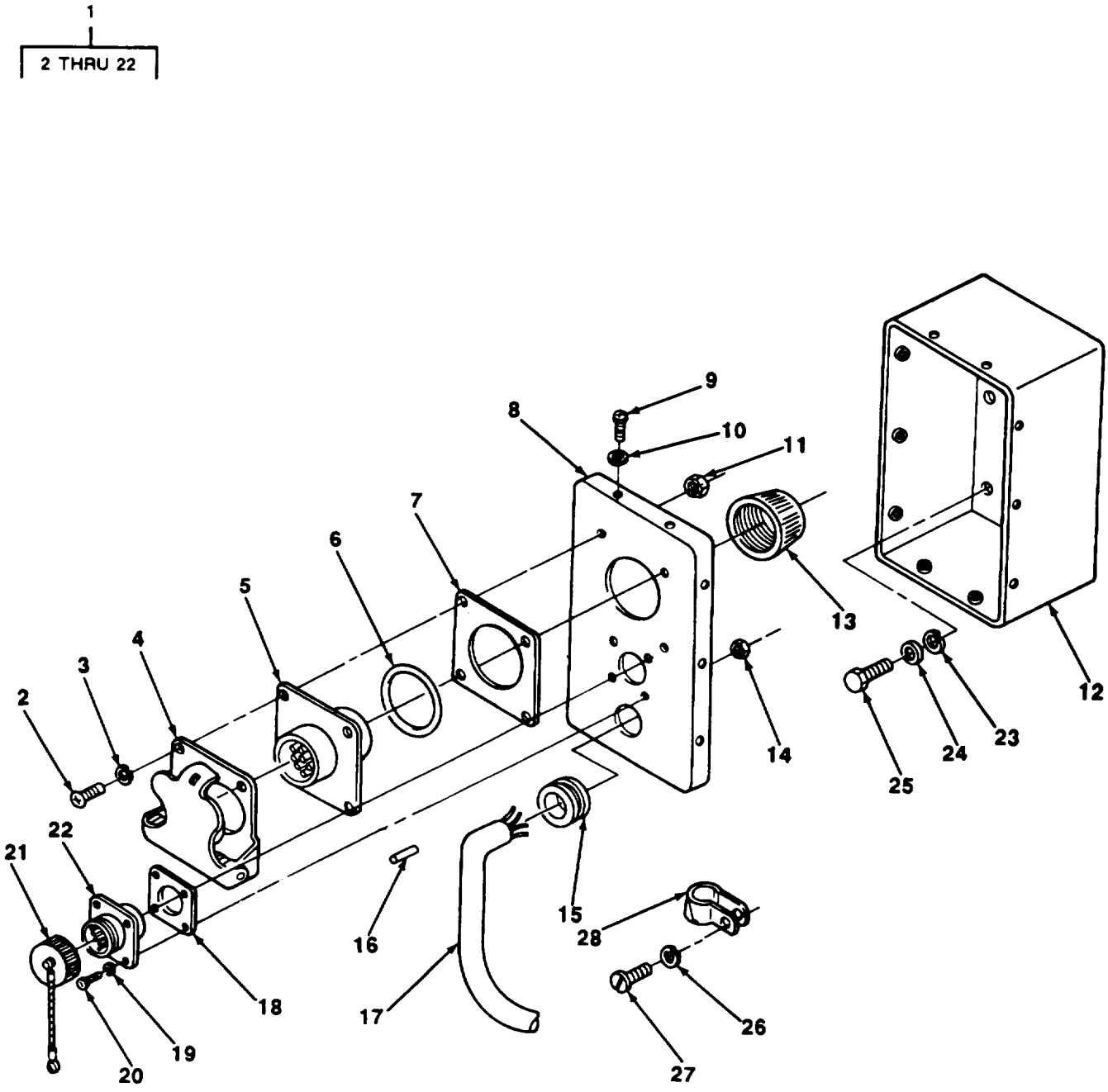

FIGURE 2. DISTRIBUTION BOX, REAR (M689, M840).

(1) ITEM NO	(2) SMR CODE	(3) CAGEC	(4) PART NUMBER	(5) DESCRIPTION AND USABLE ON CODES (UOC)	(6) QTY
				GROUP 0608 MISCELLANEOUS ITEMS FIG.2 DISRIBUTION BOX, REAR (M689, M840)	
1	PAOZZ	19207	11588318	DISTRIBUTION BOX UOC:151,265	1
1	PAOZZ	19207	11682068	DISTRIBUTION BOX,REA REAR (STARTING WITH CONTRACT 72-C-0297) UOC:151	1
2	PAOZZ	96906	MS51957-81	SCREW,MACHINE PART OF 11588318 & 11682068 UOC:151,265	4
3	PAOZZ	96906	MS35338-139	WASHER,LOCK PART OF 11588318 & 11682068 UOC:151,265	4
4	PAOZZ	19207	7731428	COVER,ELECTRICAL CO PART OF 11588318 & 11682068 UOC:151,265	1
5	PAOZA	96906	MS75021-1	CONNECTOR,RECEPTACL PART OF 11588318 & 11682068 UOC:151,265	1
6	PAOZZ	19207	7722333	BUSHING,NONMETALLIC PART OF 11588318 & 11682068 UOC:151,265	1
7	PAOZZ	19207	7525965	GASKET PART OF 11588318 & 11682068. UOC:151,265	1
8	XBOZZ	19207	11588316	COVER,JUNCTION BOX PART OF 11588318 & 11682068 UOC:151,265	1
9	PAOZZ	96906	MS51957-30	SCREW,MACHINE PART OF 11588318 & 11682068 UOC:151,265	10
10	PAOZZ	96906	MS35338-136	WASHER,LOCK PART OF 11588318 & 11682068 UOC:151,265	10
11	PAOZZ	96906	MS51971-1	NUT,PLAIN,HEXAGON PART OF 11588318 & 11682068 UOC:151,265	4
12	XBOZZ	19207	11588315-2	BOX,JUNCTION PART OF 11588318 & 11682068 UOC:151,265	1
13	PAOZZ	19207	7723309	NUT,PLAIN,KNURLED PART OF 11588318 & 11682068 UOC:151,265	1
14	PAOZZ	96906	MS35649-242	NUT,PLAIN HEXAGON PART OF 11588318 & 11682068 UOC:151,265	4
15	PAOZZ	96906	MS35489-17	GROMMET,NONMETALLIC PART OF 11588318 & 11682068 UOC:151,265	1
16	MOOZZ	49956	267-1012P17	INSULATION SLEEVING MAKE FROM PN MIL-I-631, AS REQUIRED. PART OF	4

(1) ITEM NO	(2) SMR CODE	(3) CAGEC	(4) PART NUMBER	(5) DESCRIPTION AND USABLE ON CODES (UOC)	(6) QTY
				11588318 & 11682068 UOC:151,265	
17	PAOFF	19207	11682066	WIRING HARNESS,BRAN USE WITH P/N 11682068 UOC:151,265	1
17	PAOZZ	198207	11588347	CABLE ASSEMBLY,SPEC USE WITH P/N 11588318 UOC:151,265	1
18	PAOZZ	96906	MS52000-5	GASKET PART OF V11588318 & 11682068 UOC:151,265	1
19	PAOZZ	96906	MS35338-40	WASHER,LOCK PART OF 11588318 & 11682068 UOC:151,265	4
20	PAOZZ	96906	MS51957-16	SCREW,MACHINE PART OF 11588318 & 11682068 UOC:151,265	4
21	XBOZZ	96906	MS25043-16C	COVER,ELECTRICAL CO PART OF 11588318 & 11682068 UOC:151,265	1
22	PAOZA	96906	MS3452W16-10S	CONNECTOR,RECEPTACL PART OF 11588318 & 11682068 UOC:151,265	1
23	PAOZZ	96906	MS35338-139	WASHER,LOCK UOC:151,265	4
24	PAOZZ	96906	MS15795-710	WASHER,FLAT UOC:151,265	4
25	PAOZZ	96906	MS51957-81	SCREW,MACHINE UOC:151,265	4
26	PAOZZ	96906	MS35338-43	WASHER,LOCK UOC:151,265	6
27	PAOZZ	96906	MS35207-264	SCREW,MACHINE UOC:151,265	6
28	PAOZZ	96906	MS21919WDG8	CLAMP,LOOP UOC:151,265	6

END OF FIGURE

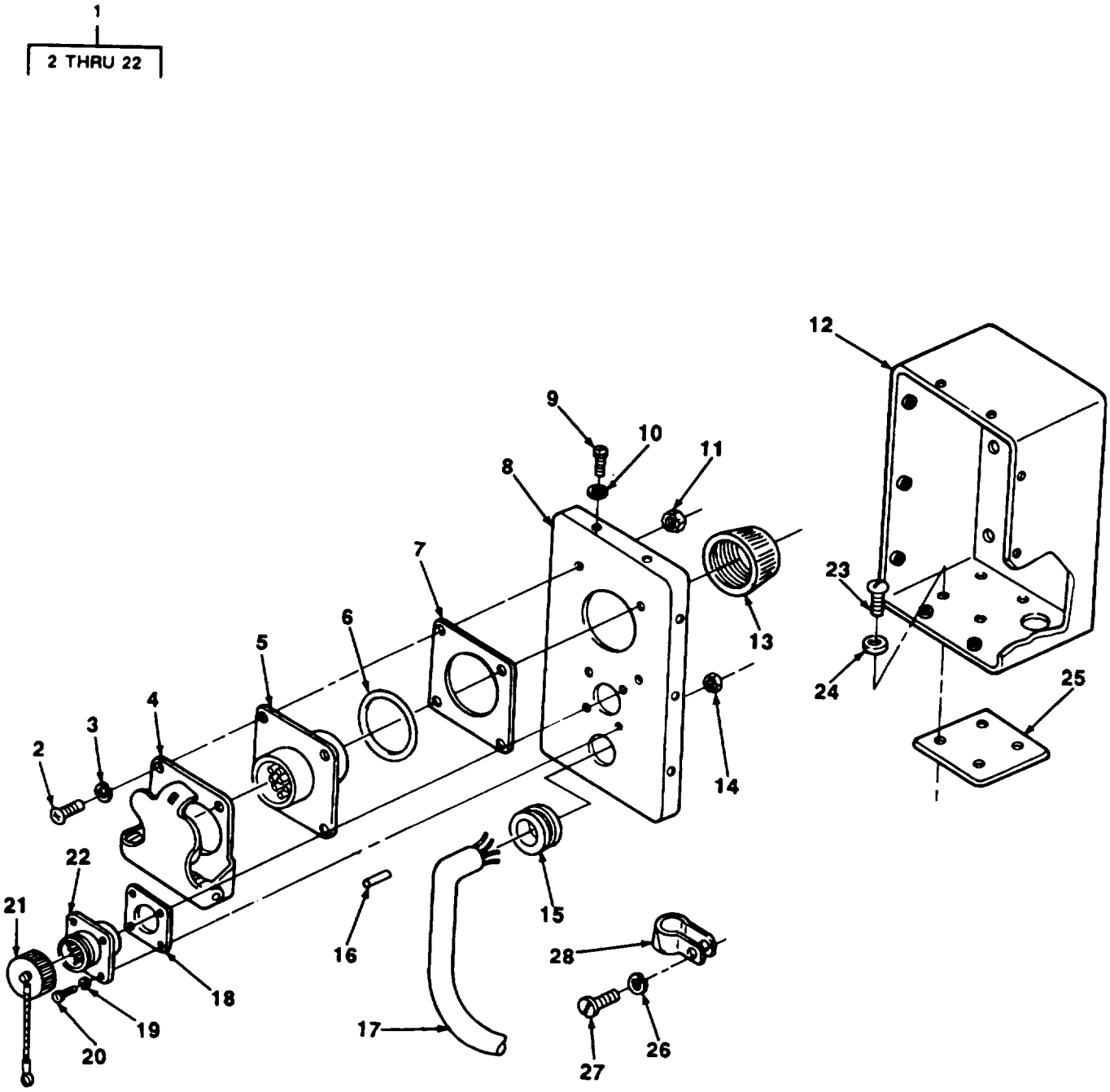

FIGURE 3. DISTRIBUTION BOX, REAR (M832).

(1) ITEM NO	(2) SMR CODE	(3) CAGEC	(4) PART NUMBER	(5) DESCRIPTION AND USABLE ON CODES (UOC)	(6) QTY
				GROUP 0608 MISCELLANEOUS ITEMS FIG.3 DISTRIBUTION BOX, REAR (M832)	
1	PAOZO	19207	11682068-1	DISTRIBUTION BOX (STARTING WITH 1 CONTRACT 73-C-0225) UOC:C12	1
2	PAOZZ	96906	MS51957-81	.SCREW,MACHINE UOC:C12	4
3	PAOZZ	96906	MS35338-139	.WASHER,LOCK UOC:C12	4
4	PAOZZ	19207	7731428	.COVER,ELECTRICAL CO UOC:C12	1
5	PAOZA	96906	MS75021-1	.CONNECTOR,RECEPTACL UOC:C12	1
6	PAOZZ	19207	7722333	.BUSHING,NONMETALLIC UOC:C12	1
7	PAOZZ	19207	7525965	.GASKET UOC:C12	1
8	XBOZZ	19207	11588316	.COVER,JUNCTIO BOX UOC:C12	1
9	PAOZZ	96906	MS51957-30	.SCREW,MACHINE UOC:C12	10
10	PAOZZ	96906	MS35338-136	.WASHER,LOCK UOC:C12	10
11	PAOZZ	96906	MS51971-1	.NUT,PLAIN,HEXAGON UOC:C12	4
12	XBOZZ	19207	11588315-5	.BOX,JUNCTION UOC:C12	1
13	PAOZZ	19207	7723309	.NUT,PLAIN,KNURLED UOC:C12	1
14	PAOZZ	96906	MS35649-242	.NUT,PLAIN,HEXAGON UOC:C12	4
15	PAOZZ	79497	G1895	.GROMMET,NONMETALLIC UOC:C12	1
16	MOOZZ	49956	267-1012P17	.INSULATION SLEEVING MAKE FROM PN MIL-I-631, AS REQUIRED UOC:C12	1
17	PAOZZ	19207	11682066-1	.WIRING HARNESS,BRAN UOC:C12	1
18	PAOZZ	96906	MS52000-5	.GASKET UOC:C12	1
19	PAOZZ	96906	MS35338-40	.WASHER,LOCK UOC:151,265	4
20	PAOZZ	96906	MS51957-16	.SCREW,MACHINE UOC:C12	4
21	PAOZZ	96906	MS25043-16DA	.COVER,ELECTRICAL CO UOC:C12	1
22	PAOZA	96906	MS3452W16-10S	.CONNECTOR,RECEPTACL UOC:C12	1
23	PAOZZ	96906	MS51957-81	.SCREW,MACHINE UOC:C12	4
24	PAOZZ	21699	10741-14-28	WASHER,FLAT	4

(1) ITEM NO	(2) SMR CODE	(3) CAGEC	(4) PART NUMBER	(5) DESCRIPTION AND USABLE ON CODES (UOC)	(6) QTY
				UOC:C12	
25	XBOZZ	19207	11649106	SPACER	1
				UOC:C12	
26	PAOZZ	96906	MS35338-43	WASHER,LOCK	6
				UOC:C12	
27	PAOZZ	96906	MS35207-264	SCREW,MACHINE	6
				UOC:C12	
28	PAOZZ	96906	MS21919DG8	CLAMP,LOOP	6
				UOC:C12	

END OF FIGURE

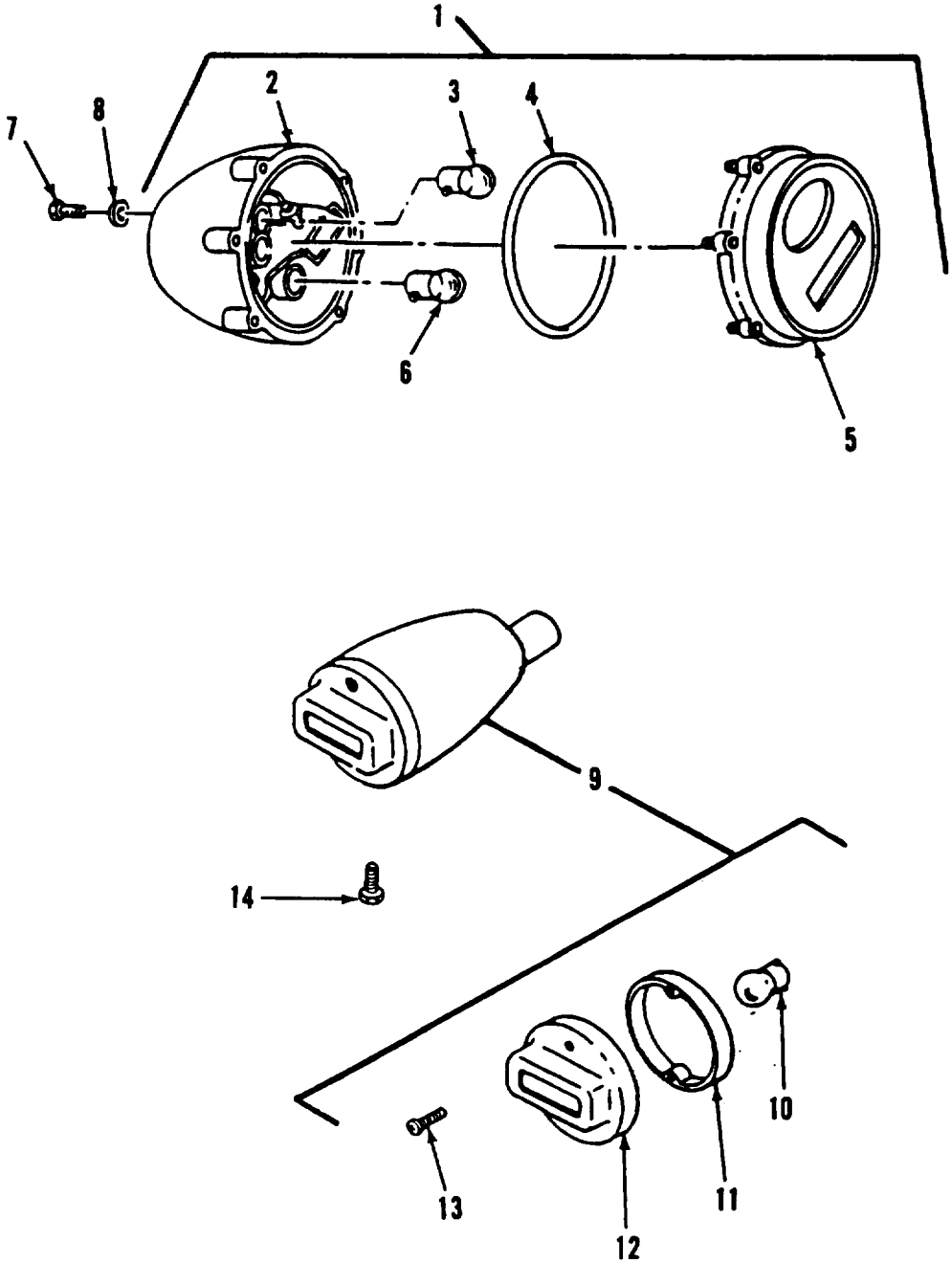

FIGURE 4. STOPLIGHT-TAILLIGHT ASSEMBLY (M689, M840).

(1) ITEM NO	(2) SMR CODE	(3) CAGEC	(4) PART NUMBER	(5) DESCRIPTION AND USABLE ON CODES (UOC)	(6) QTY
				GROUP 0609 LIGHTS FIG.4 STOPLIGHT-TAILLIGHT ASSEMBLY (M689, M840)	
1	PAOOZ	96906	MS51329-1	STOP LIGHT-TAILLIGH UOC:265	2
2	PAOZZ	96906	MS53047-1	.LIGHT,PARKING UOC:265	1
3	PAOZZ	96906	MS35478-1683	.LAMP,INCANDESCENT UOC:265	1
4	PAOZZ	19207	7320658	.PACKING,PREFORMED UOC:265	1
5	PAOZZ	96906	MS51329-23	.LENS,LIGHT UOC:265	1
6	PAOZZ	96906	MS15570-1251	.LAMP,INCANDESCENT UOC:265	2
7	PAOZZ	96906	MS90725-60	SCREW,CAP,HEXAGON H UOC:265	4
8	PAOZZ	96906	MS35335-35	WASHER,LOCK UOC:265	8
9	PAOZZ	19207	8741645	STOP LIGHT,VEHICULA UOC:151,265	1
10	PAOZZ	96906	MS15570-1251	.LAMP,INCANDESCENT UOC:151,265	1
11	PAOZZZ	73331	5942528	.GASKET UOC:151,265	1
12	PAOZZ	19207	8741646	.RETAINER,LENS UOC:151,265	1
13	PAOZZ	96906	MS51959-46	.SCREW,MACHINE UOC:151,265	2
14	PAOZZ	96906	MS90726-29	BOLT,MACHINE UOC:151,265	2

END OF FIGURE

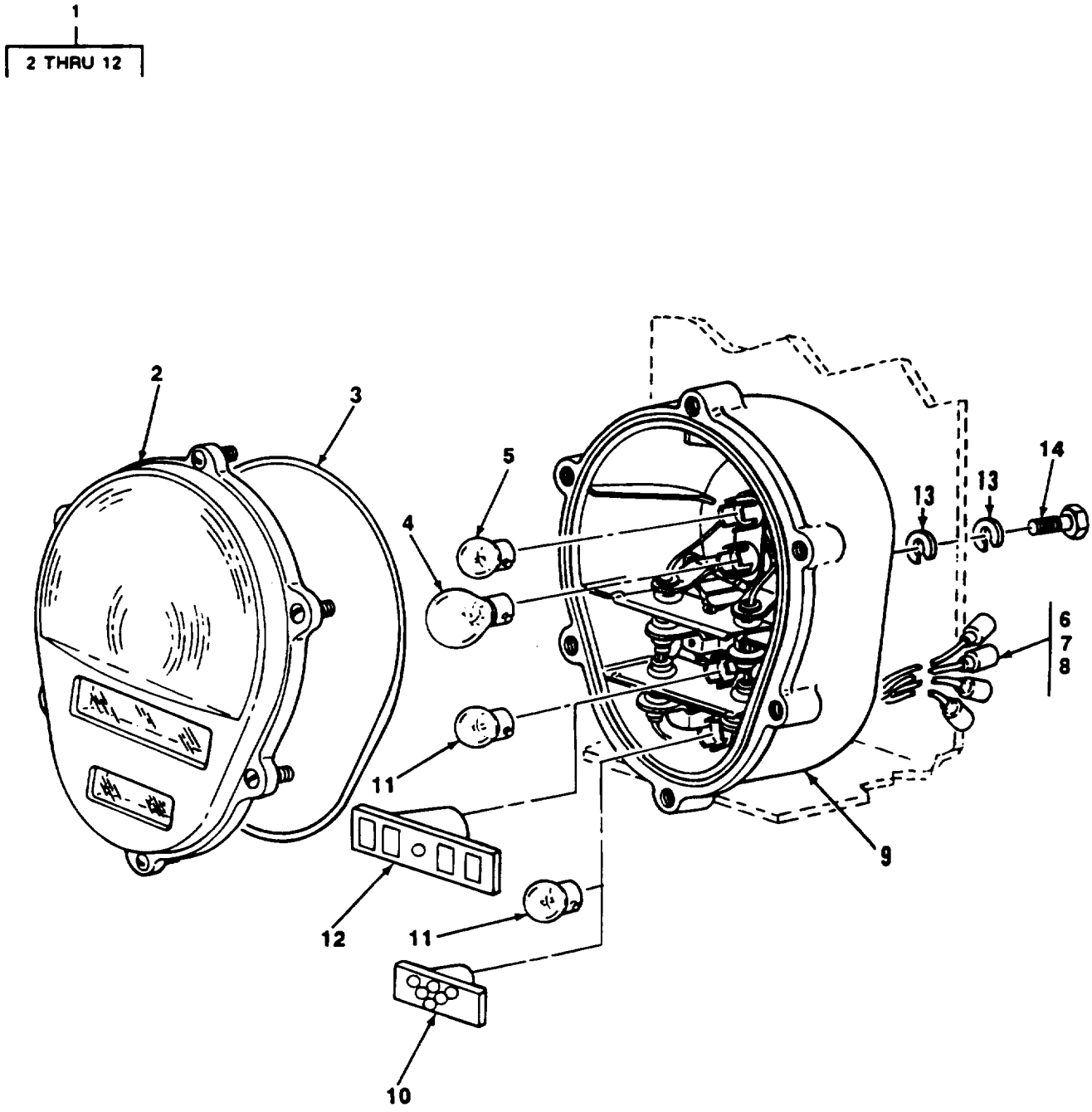

FIGURE 5. COMPOSITE STOPLIGHT-TAILLIGHT (M832, M840).

(1) ITEM NO	(2) SMR CODE	(3) CAGEC	(4) PART NUMBER	(5) DESCRIPTION AND USABLE ON CODES (UOC)	(6) QTY
				GROUP 0609 LIGHTS FIG.5 COMPOSITE STOPLIGHT-TAILLIGHT (M832,M840)	
1	PAOZO	19207	12375837	TAILLIGHT,VEHICULAR UOC:C12,151	2
2	PAOZZ	1927	12375841	.LENS,LIGHT UOC:C12,151	1
3	PAOZZ	19207	11639519-2	.PACKING,PREFORMED UOC:C12,151	1
4	PAOZZ	96906	MS35478-1683	.LAMP,INCANDESCENT UOC:C12,151	1
5	PAOZZ	96906	MS15570-623	.LAMP,INCANDESCENT UOC:C12,151	1
6	PAOZZ	19207	8338566	.SHELL,ELECTRICAL CO UOC:C12,151	4
7	PAOZZ	19207	8338567	.WASHER,SLOTTED UOC:C12,151	4
8	PAOZA	19204	572929	.CONTACT,ELECTRICAL UOC:C12,151	4
9	XAOZZ	19207	12375838	.BODY ASSEMBLY UOC:C12,151	1
10	PAOZZ	19207	12360870-2	.STOP LIGHT,VEHICULA UOC:C12,151	1
11	PAOZZ	96906	MS15570-1251	.LAMP,INCANDESCENT UOC:C12,151	2
12	PAOZZ	19207	12360850-1	.LIGHT,MARKER,CLEARA UOC:C12,151	1
13	PAOZZ	96906	MS35338-54	WASHER,LOCK UOC:C12,151	8
14	PAOZZ	80204	B1821BH038C075D	SCREW,CAP,HEXAGON H UOC:C12,151	8
				END OF FIGURE	

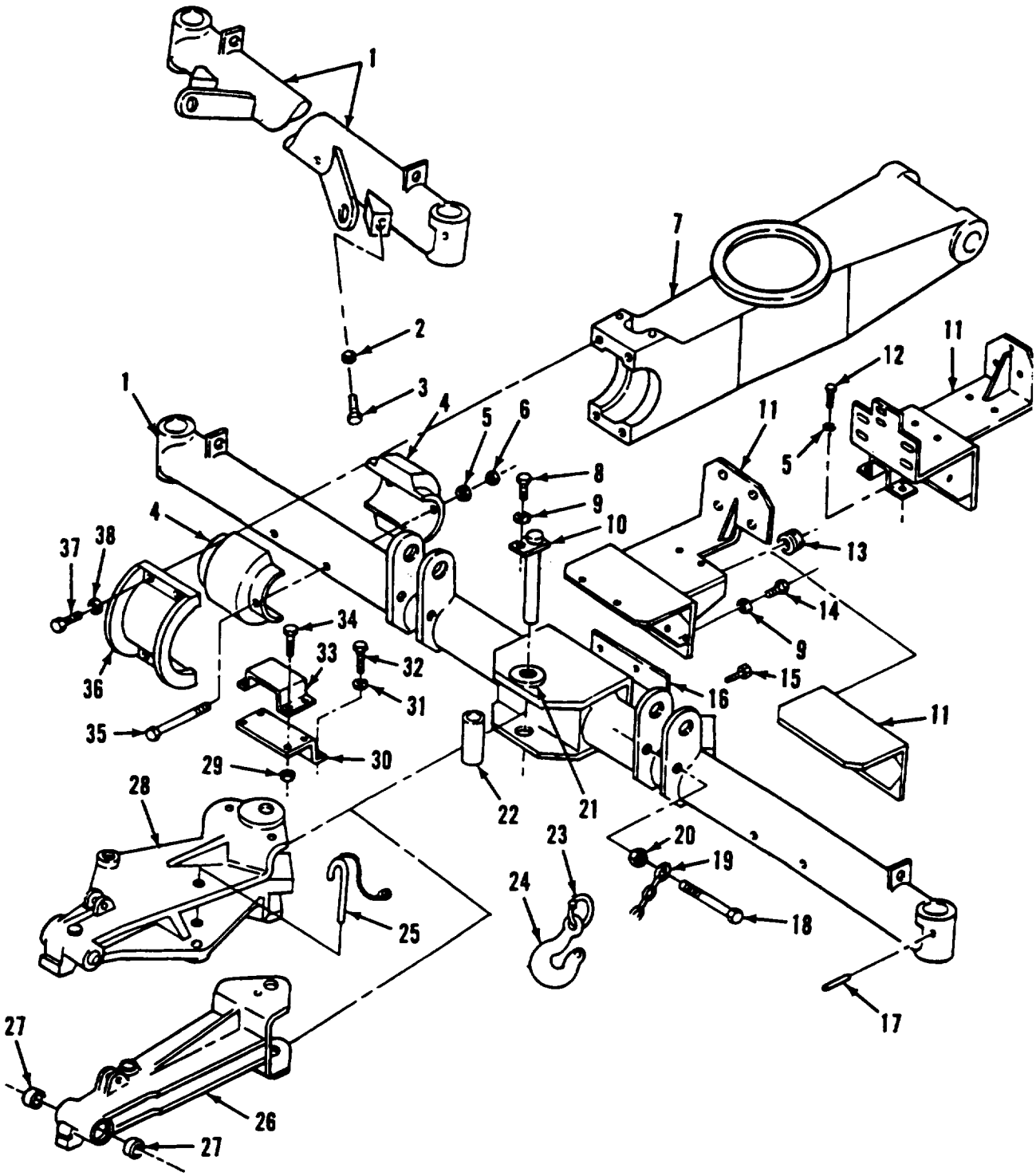

FIGURE 6. FRONT AXLE ASSEMBLY (M832).

(1) ITEM NO	(2) SMR CODE	(3) CAGEC	(4) PART NUMBER	(5) DESCRIPTION AND USABLE ON CODES (UOC)	(6) QTY
				GROUP 10 FRONT AXLE GROUP 1000 FRONT AXLE ASSEMBLY FIG.6 FRONT AXLE ASSEMBLY	
1	PBOZF	19207	12255284	AXLE,VEHICULAR,NOND AFTER M840 CONTRACT 76-C-0053: M832 CONTRACT 73-C-0225	1
1	PBOZZ	19207	12440402	AXLE SN J089-001 THRU 159 & J 17-160 THRU 350 UOC:C12	1
2	PAOZZ	96906	MS51967-29	NUT,PLAIN,HEXAGON SN J089-001 THRU 159 & J017-160 THRU 350 UOC:C12	2
3	PAOZZ	80204	B1821BH100C200L	BOLT SN J089-001 THRU 159 & J017 160 THRU 350 UOC:C12	2
4	PAOZZ	19207	11588259	BEARING,A,LE TRUNNI	4
5	PAOZZ	96906	MS35338-45	WASHER,LOCK	6
6	PAOZZ	96906	MS35691-10	NUT,PLAIN,HEXAGON	4
7	PAOZZ	19207	11588282	ARM,PIVOTTING WHEEL UOC:151,265	2
7	PAOZZ	19207	11649082-1	YOKE,FRONT AXLE ASS UOC:C12	2
8	PAOZZ	80204	B1821BH038C075D	SCREW,CAP,HEXAGON H	1
9	PAOZZ	96906	MS35338-46	WASHER,LOCK	6
10	PAOZZ	19207	12255285	PIN,STRAIGHT,HEADED AFTER M840 CONTRACT 76-C-0053: M832 CONTRACT 73-C-0225 UOC:C12,151	1
10	PBOZZ	19207	11588314	PIN,ECCENTRIC	1
11	XBOZZ	19207	11588309	SHROUD,FRONT AXLE UOC:265	1
11	XBOZZ	19207	11649068	BRACKET,MOUNTING UOC:C12	1
11	XBOZZ	19207	11652431	SHROUD UOC:151	1
11	PFOZZ	19207	12436799	BRACKET,PUMP FRONT SN J089-001 THRU 159 & J017-160 THRU 350 UOC:C12	1
12	PAOZZ	96906	MS90725-33	BOLT,MACHINE SN J089-001 THRU 159 & J017-160 THRU 350 UOC:C12	2
13	PAOZZ	96906	MS35489-72	GROMMET,NONMETALLIC	1
14	PAOZZ	96906	MS90726-61	SCREW,CAP,HEXAGON H	5
15	PAOZZ	80204	B1821BH050C175N	SCREW,CAP,HEXAGON H UOC:C12,151	2
16	XBOZZ	19207	11588335	SPACER	1
17	PAOZZ	19207	8720578	PIN,TAPERED,PLAIN UOC:265	2
17	PAOZZ	19207	8720578-2	PIN,TAPERED,PLAIN UOC:C12,151	2
18	PAOZZ	80204	B1821BH050C400N	SCREW,CAP,HEXAGON H	2

(1) ITEM NO	(2) SMR CODE	(3) CAGEC	(4) PART NUMBER	(5) DESCRIPTION AND USABLE ON CODES (UOC)	(6) QTY
19	MOOZZ	19207	11647930	CHAIN ASSY,SAFETY MAKE FROM PN 8257586, 108 INCHES LONG	2
19	MOOZZ	19207	11647930-1	SAFETY CHAIN ASSY SN J089-001 THRU 159 & J017-160 THRU 350 MAKE FROM PN 8527586, 93 INCHES LONG UOC:C12	2
20	PAOZZ	96906	MS16228-8C	NUT,SELF-LOCKING,HE	2
21	PAOZZ	96906	MS17795-141	BEARING,SLEEVE UOC:265	2
22	PAOZZ	19207	11588334	SPACER,SLEEVE	1
22	PAOZZ	19207	11588334-1	SPACER,SLEEVE AFTER M840 CONTRACT 76-C-0053: M832 CONTRACT 73-C-0225 UOC:C12,151	1
23	PAOZZ	80535	577-0615	LINK,CHAIN,DETACHAB UOC:C12,151	2
24	PAOZZ	19207	11669139	EYE HOOK	2
25	PAOZZ	19207	11647932	BOLT BLANK UOC:C12,151	1
25	PAOZZ	19207	11647932-1	PIN ASSEMBLY,FRONT AFTER M840 CONTRACT 76-C-0053: M832 CONTRACT 73-C-0225 UOC:C12,151	1
26	PAOZZ	19207	11588274	CONNECTING LINK,RIG UOC:265	1
27	PAOZZ	60960	P100-12	BEARING,SLEEVE UOC:265	2
28	PAOZZ	19207	12255293	LINK,CONNECTING FRO AFTER M840 CONTRACT 76-C-0053: M832 CONTRACT 73-C-0225 UOC:C12,151	1
28	PAOZZ	19207	11649135	CONNECTING LINK,RIG UOC:C12,151	1
29	PAOZZ	96906	MS16228-4C	NUT,SELF-LOCKING,HE UOC:151,265	4
30	XBOZZ	19207	11588359	BRACKET,SUPPORT,CAB UOC:151,265	1
31	PAOZZ	96906	MS35338-44	WASHER,LOCK	2
32	PAOZZ	80204	B1821BH025C088N	SCREW,CAP,HEXAGON H UOC:151	6
32	PAOZZ	96906	MS90725-6	SCREW,CAP,HEXAGON H UOC:265	2
33	XBOZZ	19207	11588360	BRACKET,CABLE CLAMP	1
34	PAOZZ	80204	B1821BH025C088N	SCREW,CAP,HEXAGON H UOC:151,265	4
35	PAOZZ	80204	B1821BH031C425N	BOLT,MACHINE	4
36	XBOZZ	19207	11588258	CAP,FRONT AXLE YOKE	2
37	PAOZZ	80204	B1821BH044C250N	SCREW,CAP,HEXAGON H UOC:265	8
37	PAOZZ	96906	MS90725-95	SCREW,CAP,HEXAGON H UOC:C12,151	8
38	PAOZZ	96906	MS35338-47	WASHER,LOCK	8
15.1	PAOZZ	19207	8757687-1	SPINDLE,WHEEL,DRIVI	1

(1) ITEM NO	(2) SMR CODE	(3) CAGEC	(4) PART NUMBER	(5) DESCRIPTION AND USABLE ON CODES (UOC)	(6) QTY
				UOC:151,265	
				END OF FIGURE	

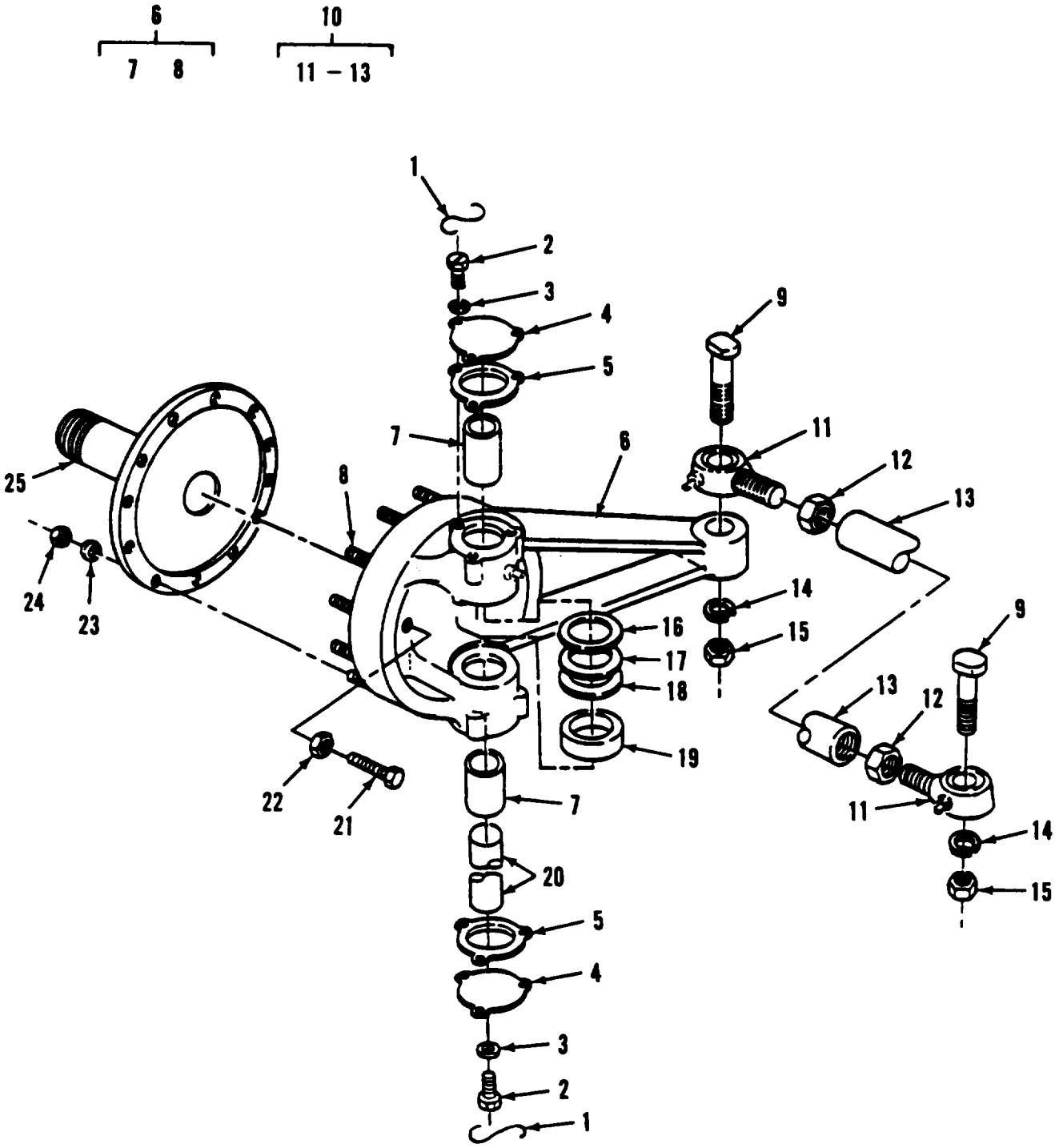

FIGURE 7. STEERING KNUCKLE (M689).

(1) ITEM NO	(2) SMR CODE	(3) CAGEC	(4) PART NUMBER	(5) DESCRIPTION AND USABLE ON CODES (UOC)	(6) QTY
				GROUP 1004 STEERING AND LEANING WHEEL MECHANISM FIG.7 STEERING KNUCKLE (M689)	
1	MOOZZ	96906	MS20995N51-6	WIRE,NONELECTRICAL MAKE FROM PN MS20995N51, 6 INCHES LONG UOC:151,265	1
2	PAOZZ	96906	MS35265-93	SCREW,MACHINE UOC:265	6
3	PAOZZ	96906	MS35338-45	WASHER,LOCK UOC:265	6
4	PAOZZ	19207	10947473	COVER,ACCESS UOC:265	2
5	PAOZZ	78500	2208M377	GASKET UOC:265	2
6	PAOZZ	19207	10947477	.BUSHING,SLEEVE UOC:265	2
6	PFOZZ	19207	10947468	SPINDLE,WHEEL,DRIVI UOC:265	1
8	PAOZZ	19207	10896705	.STUD,PLAIN UOC:265	12
9	PAOZZ	19207	11588257	BOLT,SHEAR UOC:265	2
10	PAOZZ	19207	11588296	TIE ROD,STEERING UOC:151,265	1
11	PAOZZ	19207	10947368	.BEARING,PLAIN,ROD E UOC:265	2
12	PAOZZ	88044	AN316-12R	.NUT,PLAIN,HEXAGON UOC:151,265	2
13	XAOZZ	19207	11652460	.TIE ROD UOC:265	1
14	PAOZZ	96906	MS35338-51	WASHER,LOCK UOC:151,265	2
15	PAOZZ	96906	MS51968-23	NUT,PLAIN,HEXAGON UOC:265	2
16	PAOZZ	19207	10947472-3	SHIM UOC:265	1
17	PAOZZ	19207	10947472-1	WASHER,FLAT UOC:265	1
18	PAOZZ	19207	10947472-2	WASHER,FLAT UOC:265	1
19	PAOZZ	19207	10947470	BEARING,ROLLER,THRU UOC:265	1
20	PAOZZ	78500	3101M91	KINGPIN,WHEEL SPIND UOC:265	1
21	XBOZZ	19207	10947475	SCREW,STERRING MOUN UOC:265	2
22	PAOZZ	96906	MS51968-17	NUT,PLAIN,HEXAGON UOC:151,265	1
23	PAOZZ	96906	MS35333-35	WASHER,LOCK UOC:265	12
24	PAOZZ	96906	MS51968-9	NUT,PLAIN,HEXAGON	12

(1) ITEM NO	(2) SMR CODE	(3) CAGEC	(4) PART NUMBER	(5) DESCRIPTION AND USABLE ON CODES (UOC)	(6) QTY
				UOC:151,265	
25	PAOZZ	19207	8757687-1	SPINDLE,WHEEL,DRIVI UOC:151,265	1

END OF FIGURE

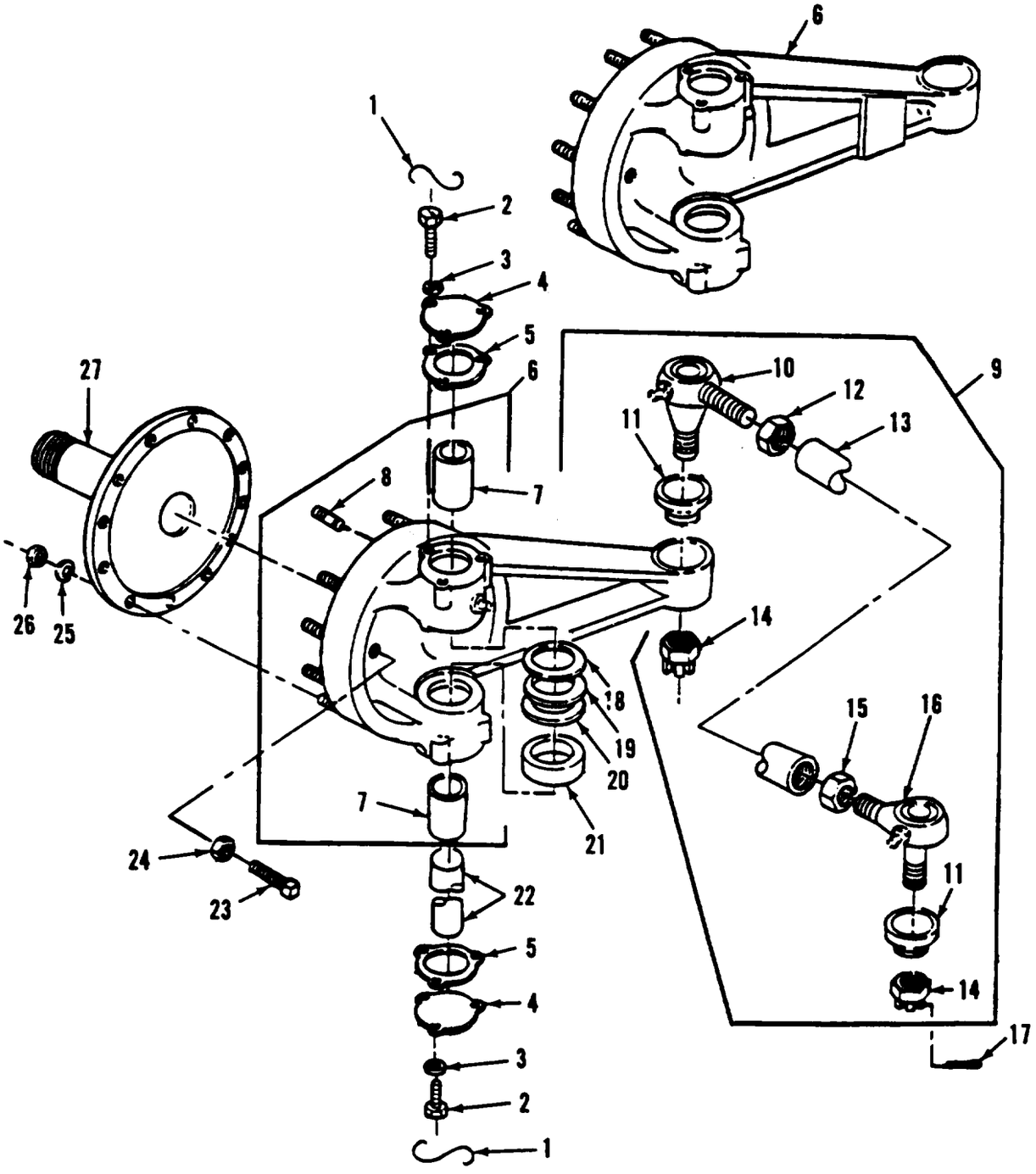

FIGURE 8. STEERING KNUCKLE (M832, M840).

(1) ITEM NO	(2) SMR CODE	(3) CAGEC	(4) PART NUMBER	(5) DESCRIPTION AND USABLE ON CODES (UOC)	(6) QTY
				GROUP 1004 STEERING AND LEANING WHEEL MECHANISM FIG.8 STEERING KUCKLLLE (M832,M840)	
1	MOOZZ	96906	MS20995N51-6	WIRE,NONELECTRICAL MAKE FROM PN MS20995N51, 6 INCHES LONG UOC:C12	1
2	PAOZZ	96906	MS35265-94	SCREW,MACHINE UOC:C12,151	12
3	PAOZZ	96906	MS35338-45	WASHER,LOCK UOC:C12,151	12
4	PAOZZ	19207	10947473	COVER,ACCESS UOC:C12,151	4
5	PAOZZ	78500	2208M377	GASKET UOC:C12,151	4
6	PAOZZ	19207	11649136	KNUCKLE,STEERING UOC:C12,151	2
6	PBOZZ	19207	12440403	STEERING KNUCKLE SN J089-001 THRU 159 & J017-160 THRU 350 UOC:C12	2
7	PAOZZ	19207	10947477	.BUSHING,SLEEVE UOC:C12,151	2
8	PAOZZ	19207	10896705	.STUD,PLAIN UOC:C12,151	12
9	PAOZZ	19207	11649137	TIE ROD,STEERING UOC:C12,151	2
10	PAOZZ	78500	A3144X206	.TIE ROD END,STEERIN LEFT HAND UOC:C12,151	1
11	PAOZZ	78500	1107278	.BOOT,DUST AND MOIST UOC:C12,151	1
12	PAOZZ	88044	AN315-18L	.NUT,PLAIN,HEXAGON LEFT HAND UOC:C12,151	1
13	PAOZZ	19207	11649138	.TIE ROD,STEERING UOC:C12,151	1
14	PAOZZ	96906	MS35692-69	.NUT,PLAIN,SLOTTED,H UOC:C12,151	2
15	PAOZZ	81352	AN315-18R	.NUT,PLAIN,HEXAGON RIGHT HAND UOC:C12,151	1
16	PAOZZ	78500	A3144W205	.TIE ROD END,STEERIN RIGHT HAND UOC:C12,151	2
17	PAOZZ	96906	MS24665-359	PIN,COTTER UOC:C12,151	4
18	PAOZZ	19207	10947472-3	SHIM UOC:C12,151	2
19	PAOZZ	19207	10947472-1	WASHER,FLAT UOC:C12,151	2
20	PAOZZ	19207	10947472-2	WASHER,FLAT UOC:C12,151	2
21	PAOZZ	19207	10947470	BEARING,ROLLER,THRU UOC:C12,151	1
22	PAOZZ	785	3101M91	KINGPIN,WHEEL SPIND UOC:C12,151	2

(1) ITEM NO	(2) SMR CODE	(3) CAGEC	(4) PART NUMBER	(5) DESCRIPTION AND USABLE ON CODES (UOC)	(6) QTY
23	XBOZZ	19207	10947475	SCREW,STERRIN MOUN UOC:C12,151	2
24	PAOZZ	96906	MS51968-17	NUT,PLAIN,HEXAGON UOC:C12,151	2
25	PAOZZ	96906	MS35335-35	WASHER,LOCK UOC:C12,151	24
26	PAOZZ	96906	MS35690-627	NUT,PLAIN,HEXAGON UOC:C12,151	24
27	PAOZZ	19207	8757687-1	SPINDLE,WHEEL,DRIVI UOC:C12,151	2

END OF FIGURE

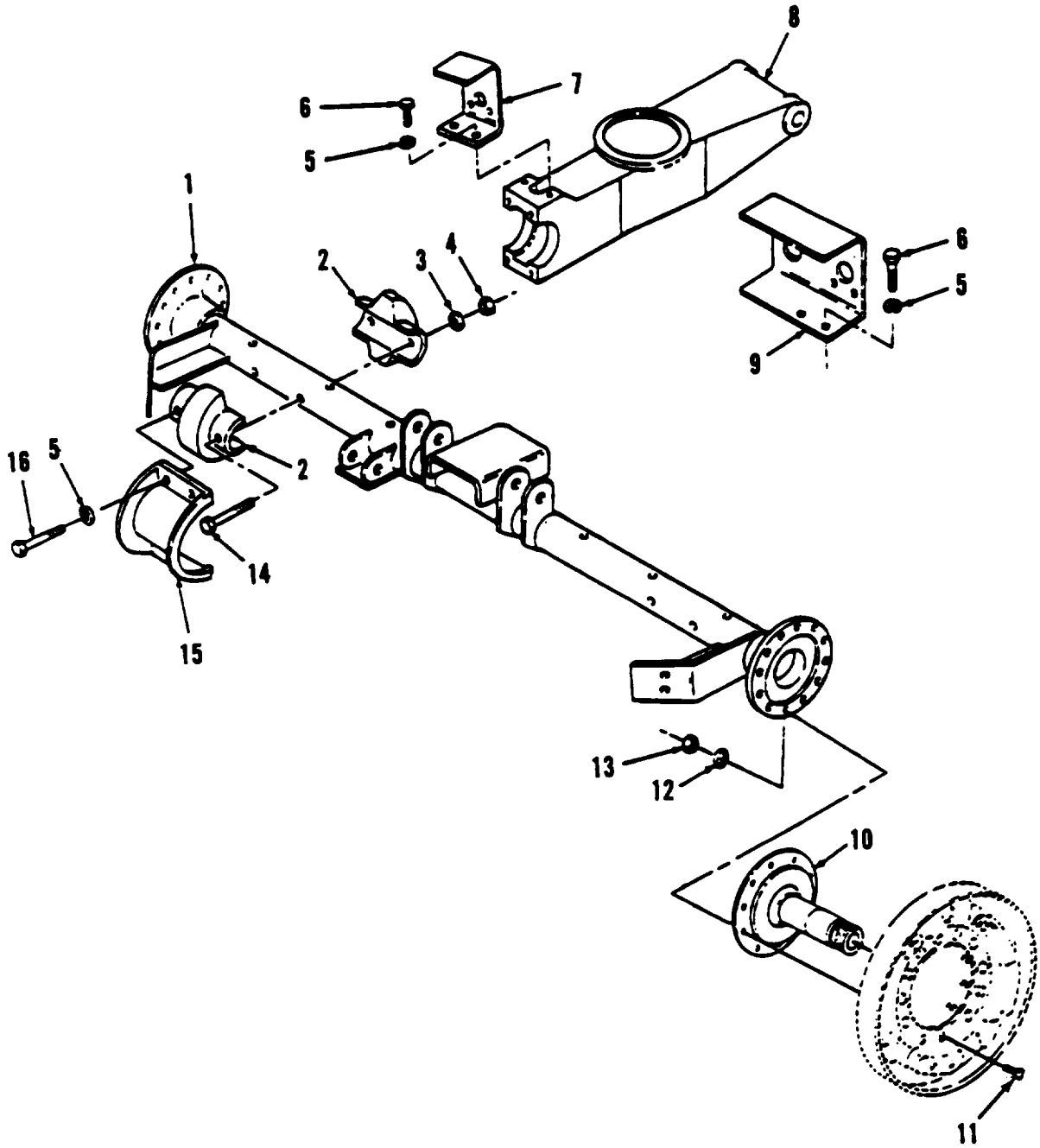

FIGURE 9. REAR AXLE ASSEMBLY (M689).

(1) ITEM NO	(2) SMR CODE	(3) CAGEC	(4) PART NUMBER	(5) DESCRIPTION AND USABLE ON CODES (UOC)	(6) QTY
				GROUP 11 REAR AXLE GROUP 1100 REAR AXLE ASSEMBLY FIG.9 REAR AXLE ASSEMBLY (M689)	
1	XBOZZ	19207	11588280	AXLE ASSEMBLY UOC:265	1
2	XBOZZ	19207	11588259	BEARING,A,LE TRUNNI UOC:265	4
3	PAOZZ	96906	MS35338-45	WASHER,LOCK UOC:265	4
4	PAOZZ	96906	MS35691-10	NUT,PLAIN,HEXAGON UOC:265	1
5	PAOZZ	96906	MS35338-48	WASHER,LOCK UOC:265	16
6	PAOZZ	80204	B1821BH050C150N	SCREW,CAP,HEXAGON H UOC:265	8
7	PAOZZ	19207	11588302	BRACKET,MOUNTING UOC:265	2
8	PFOZZ	19207	11588282	ARM,PIVOTING WHEEL UOC:265	2
9	PFOZZ	19207	11588308	HOLDER,LIGHT UOC:265	1
10	PAOZZ	19207	8757687-1	SPINDLE,WHEEL,DRIVI UOC:265	2
11	PAOZZ	19207	10947478	BOLT,RIBBED SHOULDE UOC:C12,265	24
12	PAOZZ	96906	MS35335-35	WASHER,LOCK UOC:265	24
13	PAOZZ	96906	MS51968-9	NUT,PLAIN,HEXAGON UOC:265	24
14	PAOZZ	80204	B1821BH031C425N	BOLT,MACHINE UOC:265	8
15	XBOZZ	19207	11588258	CAP,FRONT AXLE YOKE UOC:265	2
16	PAOZZ	80204	B1821BH044C250N	SCREW,CAP,HEXAGON H UOC:265	8
				END OF FIGURE	

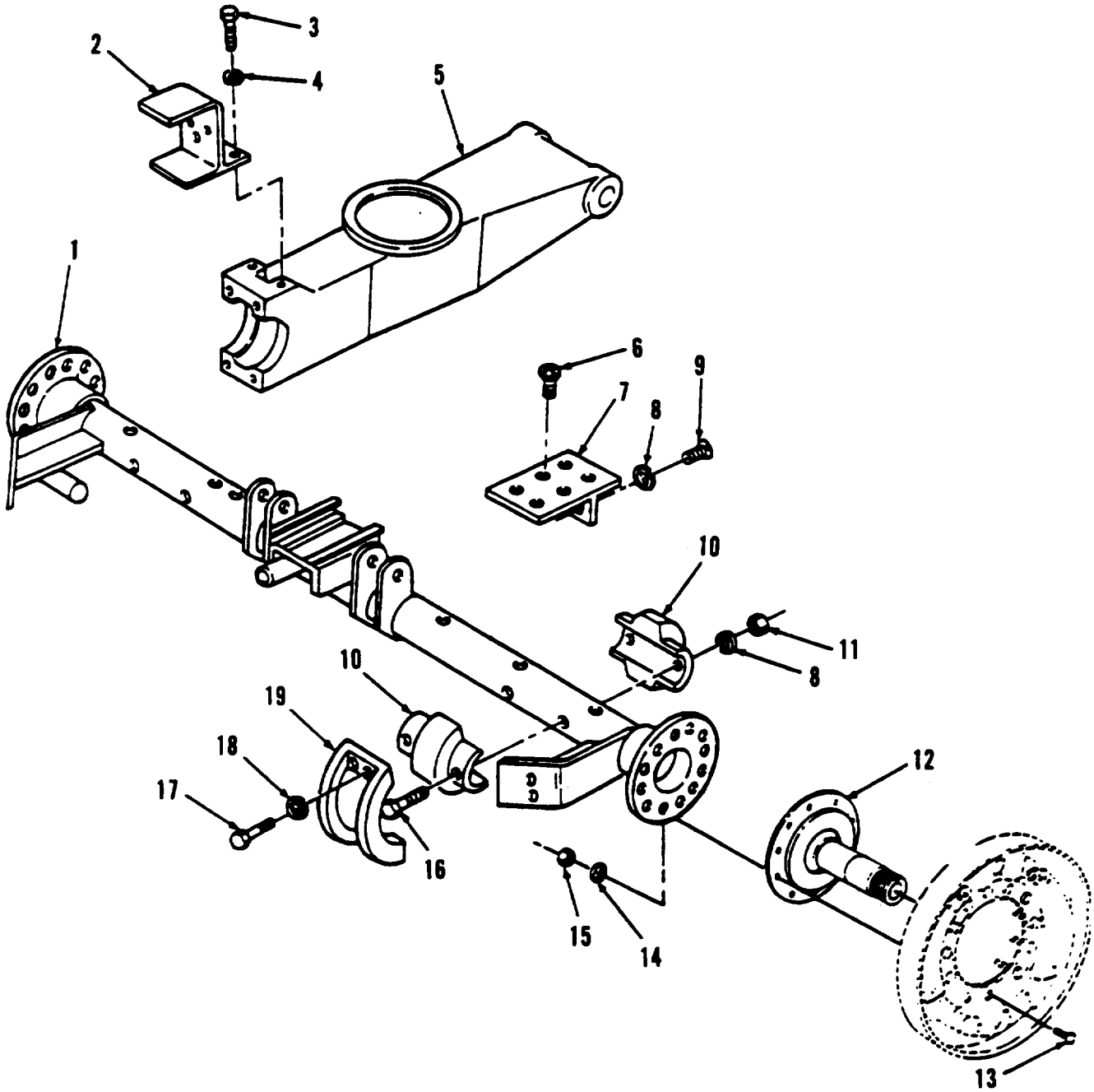

FIGURE 10. REAR AXLE ASSEMBLY (M840).

(1) ITEM NO	(2) SMR CODE	(3) CAGEC	(4) PART NUMBER	(5) DESCRIPTION AND USABLE ON CODES (UOC)	(6) QTY
				GROUP 1100 REAR AXLE ASSEMBLY FIG.10 REAR AXLE ASSEMBLY (M840)	
1	PFOFF	19207	11647950	AXLE,VEHICULAR,NOND UOC:151	1
2	PFOZZ	19207	11682067	BRACKET,LIGHT RETEN UOC:151	2
3	PAOZZ	80204	B1821BH050C150N	SCREW,CAP,HEXAGON H UOC:151	4
4	PAOZZ	96906	MS35338-48	WASHER,LOCK UOC:151	4
5	PBOZZ	19207	11588282	ARM,PIVOTING WHEEL UOC:151	2
6	PAOZZ	96906	MS35190-304	SCREW,MACHINE UOC:151	2
7	PAOZZ	19207	11652424	BRACKET,MOUNTING UOC:151	1
8	PAOZZ	96906	MS35338-45	WASHER,LOCK UOC:151	6
9	PAOZZ	80204	B1821BH031C075N	BOLT,MACHINE UOC:151	2
10	PBOZZ	19207	11588259	BEARING,A,LE TRUNNI UOC:151	4
11	PAOZZ	96906	MS35691-10	NUT,PLAIN,HEXAGON UOC:151	4
12	PAOZZ	19207	8757687-1	SPINDLE,WHEEL,DRIVI UOC:151	2
13	PAOZZ	19207	10947478	BOLT,RIBBED SHOULDE UOC:151	24
14	PAOZZ	96906	MS35335-35	WASHER,LOCK UOC:151	24
15	PAOZZ	96906	MS51968-9	NUT,PLAIN,HEXAGON UOC:151	24
16	PAOZZ	80204	B1821BH031C425N	BOLT,MACHINE UOC:151	4
17	PAOZZ	80204	B1821BH03IC425N	BOLT,MACHINE UOC:151	4
18	PAOZZ	96906	MS35338-47	WASHER,LOCK UOC:151	8
19	XBOZZ	19207	11588258	CAP,FRONT AXLE YOKE UOC:151	2
				END OF FIGURE	

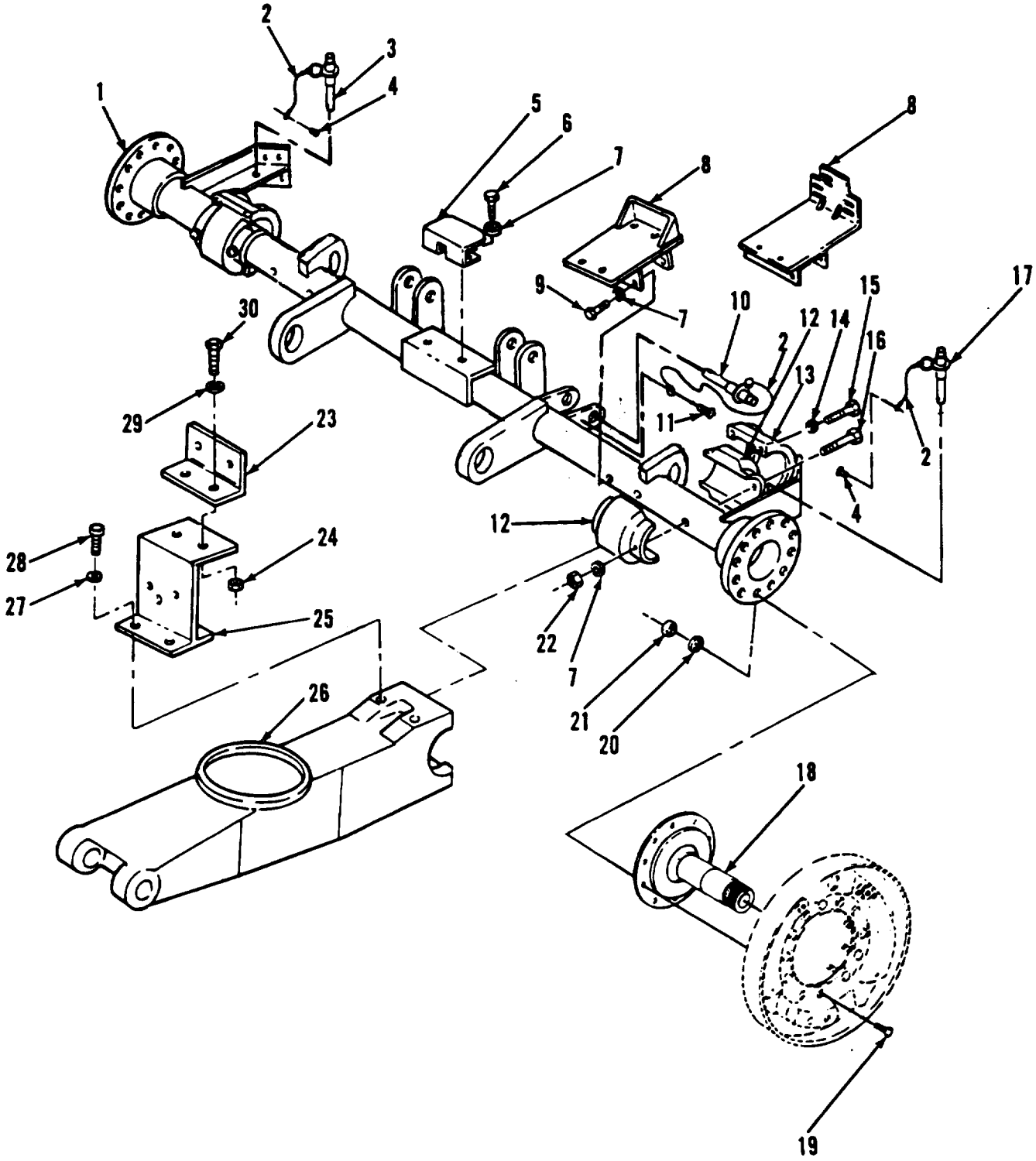

FIGURE 11. REAR AXLE ASSEMBLY (M832).

(1) ITEM NO	(2) SMR CODE	(3) CAGEC	(4) PART NUMBER	(5) DESCRIPTION AND USABLE ON CODES (UOC)	(6) QTY
				GROUP 1100 REAR AXLE ASSEMBLY FIG.11 REAR AXLE ASSEMBLY (M832)	
1	PFOZZ	19207	11649047	AXLE,VEHICULAR,NOND UOC:C12	1
2	PAOZZ	19207	11649073	WIRE ROPE ASSEMBLY, USED ON VEHICLES BEFORE SN BREAK J089-001 THRU 159 UOC:C12	3
3	PAOZZ	96906	MS17984C421	PIN,QUICK RELEASE USED ON VEHICLES BEFORE SN BREAK J089-001 THRU 159 UOC:C12	1
4	PAOZZ	19207	11153758-3	RIVET USED ON VEHICLES BEFORE SN BREAK J089-001 THRU 159 UOC:C12	2
5	PAOZZ	19207	11649049	SHROUD UOC:C12	1
6	PAOZZ	96906	MS90725-31	BOLT,MACHINE UOC:C12	2
7	PAOZZ	96906	MS35338-45	WASHER,LOCK UOC:C12	10
8	PAOZZ	19207	12255119	BRACKET,MOUNTING UOC:C12	1
8	PFOZZ	19207	12436800	BRACKET,PUMP REAR SN J089-001 THRU 159 & J017-160 THRU 350 UOC:C12	1
9	PAOZZ	80204	B1821BH038C100L	BOLT,MACHINE UOC:C12	4
10	PAOZZ	96906	MS17984-C1641	PIN,QUICK RELEASE UOC:C12	1
11	PAOZZ	96906	MS35207-264	SCREW,MACHINE UOC:C12	1
12	PBOZZ	19207	11588259	BEARING,A,LE TRUNNI UOC:C12	4
13	XBOZZ	19207	11588258	CAP,FRONT AXLE YOKE UOC:C12	2
14	PAOZZ	96906	MS35338-47	WASHER,LOCK UOC:C12	8
15	PAOZZ	96906	MS90725-95	SCREW,CAP,HEXAGON H UOC:C12	8
16	PAOZZ	80204	B1821BH031C425N	BOLT,MACHINE UOC:C12	4
17	PAFZZ	96906	MS17984C429	PIN,QUICK RELEASE USED ON VEHICLES BEFORE SN BREAK J089-001 THRU 159 UOC:C12	1
18	PAOZZ	19207	8757687-1	SPINDLE,WHEEL,DRIVI UOC:C12	2
19	PAOZZ	19207	10947478	BOLT,RIBBED SHOULDE UOC:C12	24
20	PAOZZ	96906	MS35335-35	WASHER,LOCK UOC:C12	24
21	PAOZZ	96906	MS51968-9	NUT,PLAIN,HEXAGON	24

(1) ITEM NO	(2) SMR CODE	(3) CAGEC	(4) PART NUMBER	(5) DESCRIPTION AND USABLE ON CODES (UOC)	(6) QTY
				UOC:C12	
22	PAOZZ	96906	MS35691-10	NUT,PLAIN,HEXAGON UOC:C12	4
23	PFOZZ	19207	11649028	BRACKET,ANGLE UOC:C12	2
24	PAOZZ	96906	MS35690-404	NUT,PLAIN,HEXAGON UOC:C12	4
25	MOOZZ	19207	11682067	BRACKET,LIGHT RETEN MAKE FROM P/ N11682067 UOC:C12	2
26	PBOZZ	19207	11649082-1	YOKE,FRONT AXLE ASS UOC:C12	2
27	PAOZZ	96906	MS35338-48	WASHER,LOCK UOC:C12	4
28	PAOZZ	80204	B1821BH050C150N	SCREW,CAP,HEXAGON H UOC:C12	4
29	PAOZZ	96906	MS35338-44	WASHER,LOCK UOC:C12	4
30	PAOZZ	80204	B1821BH025C088N	SCREW,CAP,HEXAGON H UOC:C12	4

END OF FIGURE

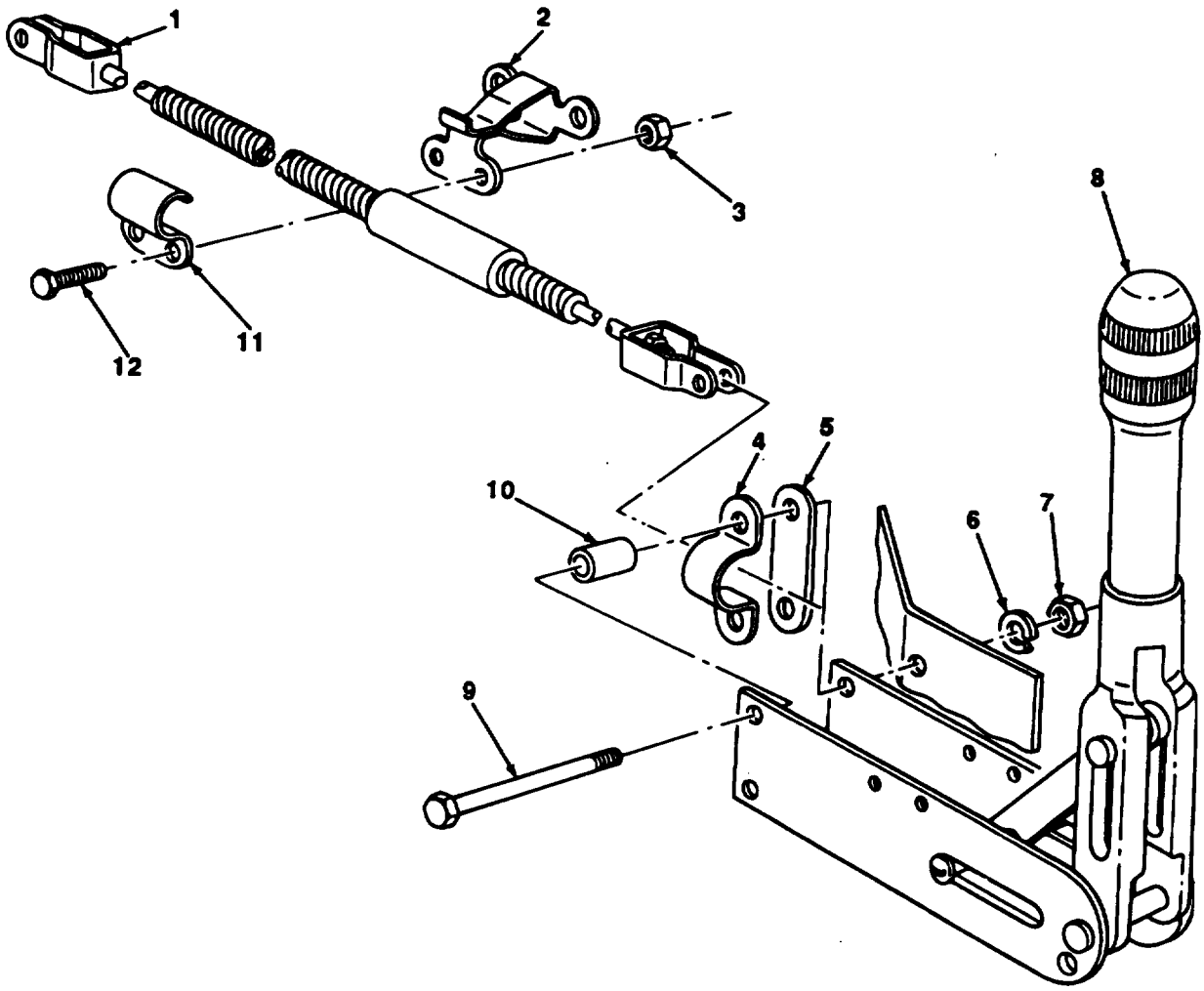

FIGURE 12. HANDBRAKES.

(1) ITEM NO	(2) SMR CODE	(3) CAGEC	(4) PART NUMBER	(5) DESCRIPTION AND USABLE ON CODES (UOC)	(6) QTY
				GROUP 12 BRAKES	
				GROUP 1201 HANDBRAKES	
				FIG.12 HANDBRAKES	
1	PAOZZ	19207	10947481	CONTROL ASSEMBLY,PU	2
2	PAOZZ	19207	10947479	BRACKET,MOUNTING	2
3	PAOZZ	96906	MS35691-13	NUT,PLAIN,HEXAGON	4
4	PAOZZ	19207	7409366	STRAP,RETAINING	2
5	PAOZZ	19207	10947448	SPACER,PLATE	2
6	PAOZZ	81718	H2525M	WASHER,LOCK	4
7	PAOZZ	96906	MS35691-18	NUT,PLAIN,HEXAGON	8
8	PAOZZ	19207	9090274	LEVER ASSY HAND BRA	2
9	PAOZZ	80204	B1821BH038C200N	SCREW,CAP,HEXAGON H	4
10	XBOZZ	19207	10947450	SPACER,LEVER ASSY	4
11	PAOZZ	19207	10947480	STRAP,RETAINING	2
12	PAOZZ	96906	MS90727-32	BOLT,MACHINE	4

END OF FIGURE

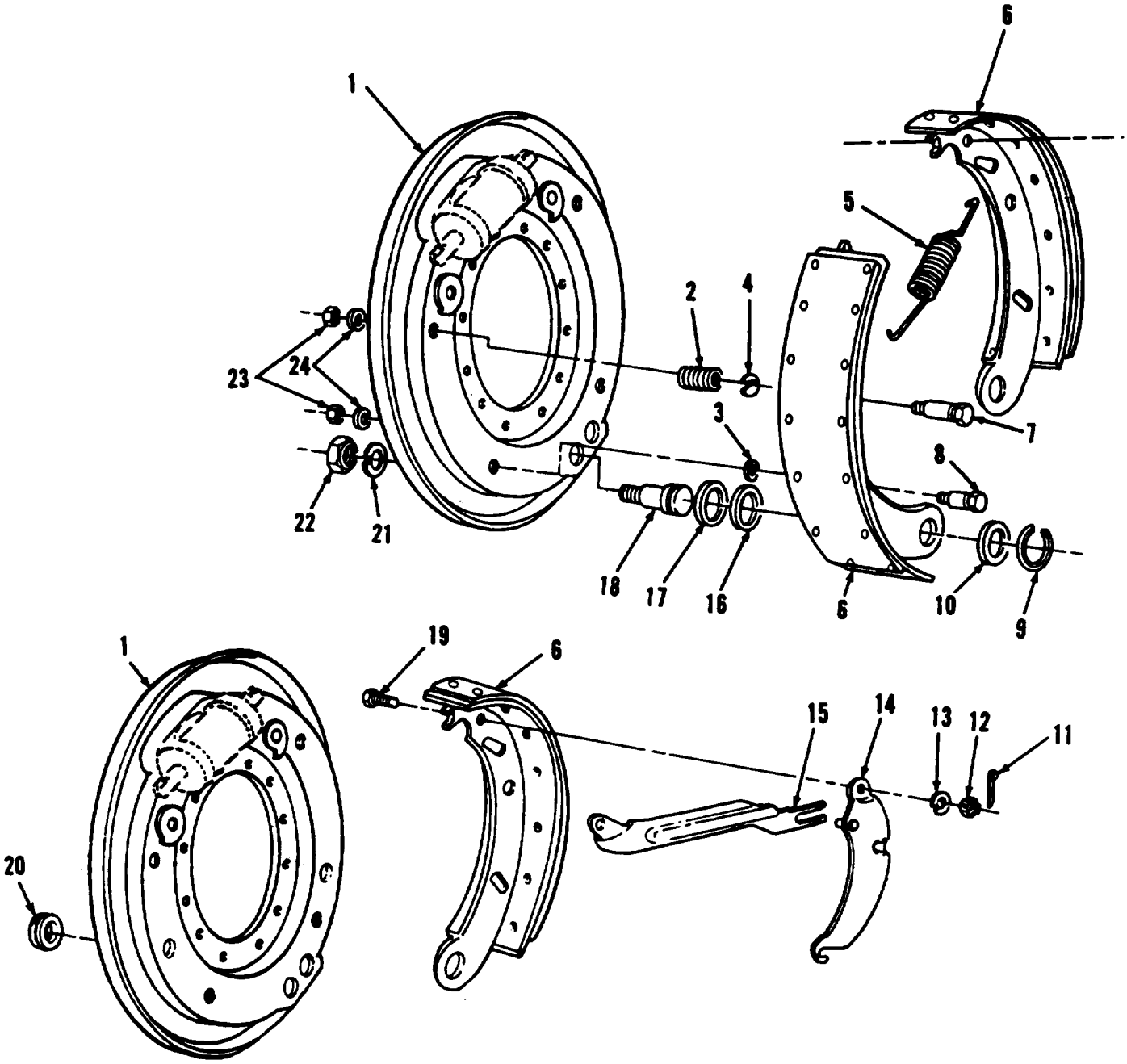

FIGURE 13. SERVICE BRAKES.

(1) ITEM NO	(2) SMR CODE	(3) CAGEC	(4) PART NUMBER	(5) DESCRIPTION AND USABLE ON CODES (UOC)	(6) QTY
				GROUP 1202 SERVICE BRAKES FIG.13 SERVICE BRAKES	
1	PAOZZ	78500	A3236L974	PLATE,BACKING,BRAKE FRONT	2
1	PAOZZ	19207	10947482	PLATE,BACKING,BRAKE REAR	2
2	PAOZZ	19207	10896716	SPRING,HELICAL,COMP	8
3	PAOZZ	19207	8331244	WASHER,GUIDE PIN PART OF KIT P/N 8332057	8
4	PAOZZ	19207	8331245	WASHER,RECESSED PART OF KIT P/N 8332057	8
5	PAOZZ	19207	7411017	SPRING,HELICAL,EXTE	4
6	PAOFF	19207	5706702	BRAKE SHOE	8
7	KFOZZ	19207	8331242	PIN,GUIDE PART OF KIT P/N 8332057	8
8	PAOZZ	19207	8331243	BOLT,SHOULDER PART OF KIT P/N 8332057	8
9	PAOZZ	19207	5160337	WASHER,SLOTTED	8
10	PAOZZ	19207	10896709	WASHER,FLAT	2
11	PAOZZ	96906	MS24665-283	PIN,COTTER	2
12	PAOZZ	96906	MS35692-21	NUT,PLAIN,SLOTTED,H	2
13	PAOZZ	96906	MS15795-814	WASHER,FLAT	2
14	PFOZZ	78500	A372G7	LEVER,BRAKE ASSEMBL LEFT HAND	1
14	PBOZZ	78500	A-372-F-6	ADJUSTER,SLACK,BRAK RIGHT HAND	1
15	PFOZZ	19207	10947463-1	LEVER,REMOTE CONTRO RIGHT HAND	1
15	PAOZZ	19207	10947463-2	LEVER,REMOTE CONTRO LEFT HAND UOC:151	1
16	PAOZZ	19207	10896683	RETAINER,PACKING UOC:151,265	2
17	PAOZZ	19207	10896712	WASHER,SPECIAL	2
18	PAOZZ	19207	10896681	PIN,ECCENTRIC	2
19	PAOZZ	19207	10947484	BOLT,MACHINE	2
20	PAOZZ	19207	10947485	GROMMET,NONMETALLIC	2
21	PAOZZ	96906	MS35338-51	WASHER,LOCK	2
22	PAOZZ	96906	MS51968-23	NUT,PLAIN,HEXAGON	2
23	PAOZZ	96906	MS51968-5	NUT,PLAIN,HEXAGON	16
24	PAOZZ	96906	MS35338-45	WASHER,LOCK PART OF KIT P/N 8332057	16

END OF FIGURE

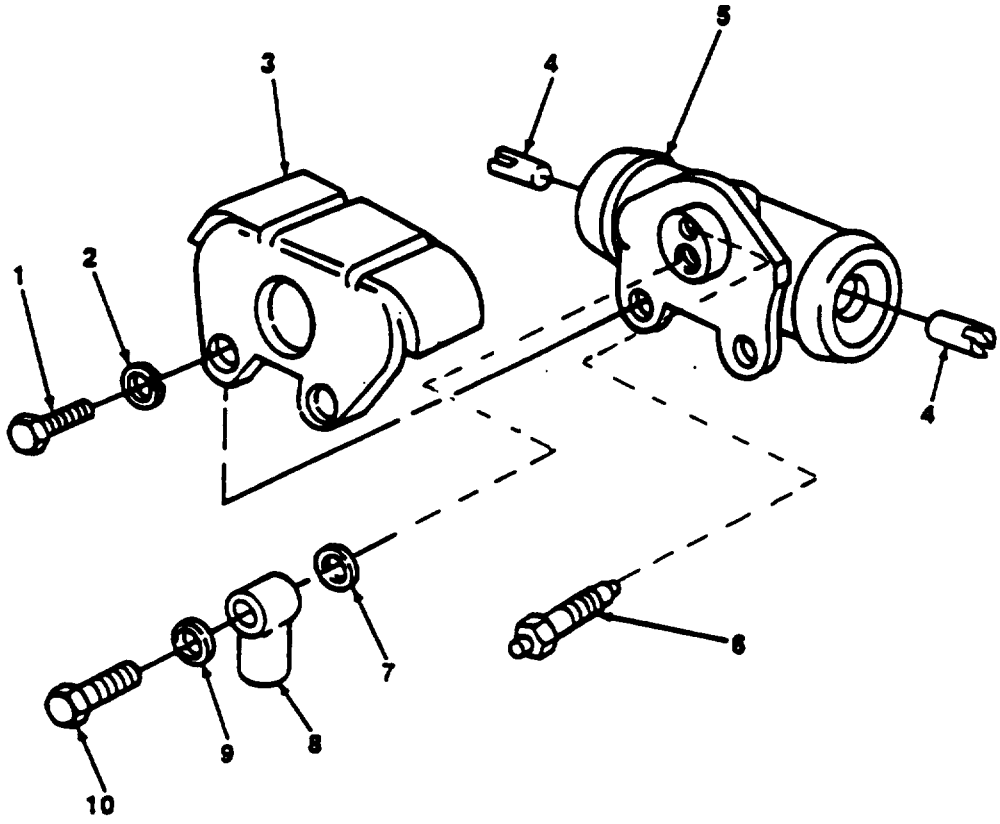

FIGURE 14. WHEEL CYLINDER.

(1) ITEM NO	(2) SMR CODE	(3) CAGEC	(4) PART NUMBER	(5) DESCRIPTION AND USABLE ON CODES (UOC)	(6) QTY
				GROUP 1204 HYDRAULIC BRAKE SYSTEM FIG.14 WHEEL CYLINDER	
1	PAOZZ	80204	B1821BH038C088N	SCREW,CAP,HEXAGON H	8
2	PAOZZ	81718	H2525M	WASHER,LOCK	8
3	PAOZZ	19207	7372762	SHIELD,VEHICULAR	4
4	PAOZZ	78500	1745B2	LINK,WHEEL CYLINDER	8
5	PAOZZ	19207	7411010	CYLINDER ASSEMBLY,H	4
6	PAOZZ	19207	7373260	VALVE,BLEEDER,HYDRA	4
7	PAOZZ	19207	5214539	WASHER,FLAT	4
8	PAOZZ	12603	620235	CONNECTOR,MULTIPLE,	4
9	PAOZZ	19207	5160323	WASHER,FLAT	4
10	PAOZZ	19207	5167419	BOLT,FLUID PASSAGE	4

END OF FIGURE

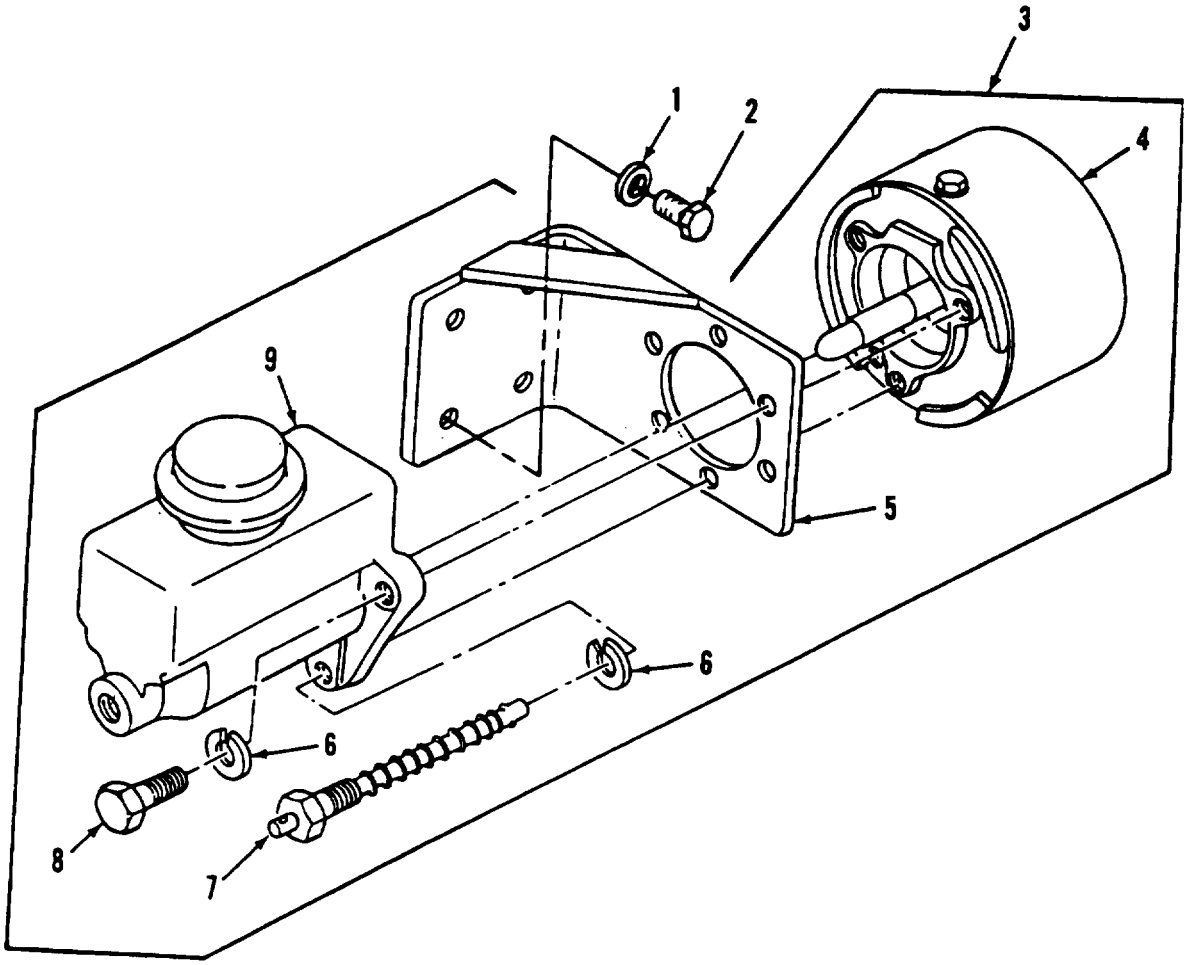

FIGURE 15. POWER CLUSTER.

(1) ITEM NO	(2) SMR CODE	(3) CAGEC	(4) PART NUMBER	(5) DESCRIPTION AND USABLE ON CODES (UOC)	(6) QTY
				GROUP 1204 HYDRAULIC BRAKE SYSTEM FIG.15 POWER CLUSTER	
1	PAOZZ	96906	MS35338-46	WASHER,LOCK	4
2	PAOZZ	80204	B1821BH038C088N	SCREW,CAP,HEXAGON H REAR DOLLY	4
2	PAOZZ	96906	MS90726-61	SCREW,CAP,HEXAGON H FRONT DOLLY	4
3	PFOOO	18876	8017004	POWER CLUSTER ASSEM UOC:C12,151	2
4	PAOZZ	19207	8017005	.CYLINDER ASSEMBLY,A FOR COMPONENT PARTS, SEE FIG. 19	1
5	PAOZZ	19207	8017031	.BRACKET,ANGLE	1
6	PAOZZ	96906	MS35338-46	.WASHER,LOCK	3
7	PAOZZ	19207	8017079	.STROKE INDICATOR AS	1
8	PAOZZ	80204	B1821BH038C150N	.SCREW,CAP,HEXAGON H	2
9	PAOZZ	63477	F4572	.CYLINDER ASSEMBLY,H FOR COMPONENT PARTS, SEE FIG. 16	1

END OF FIGURE

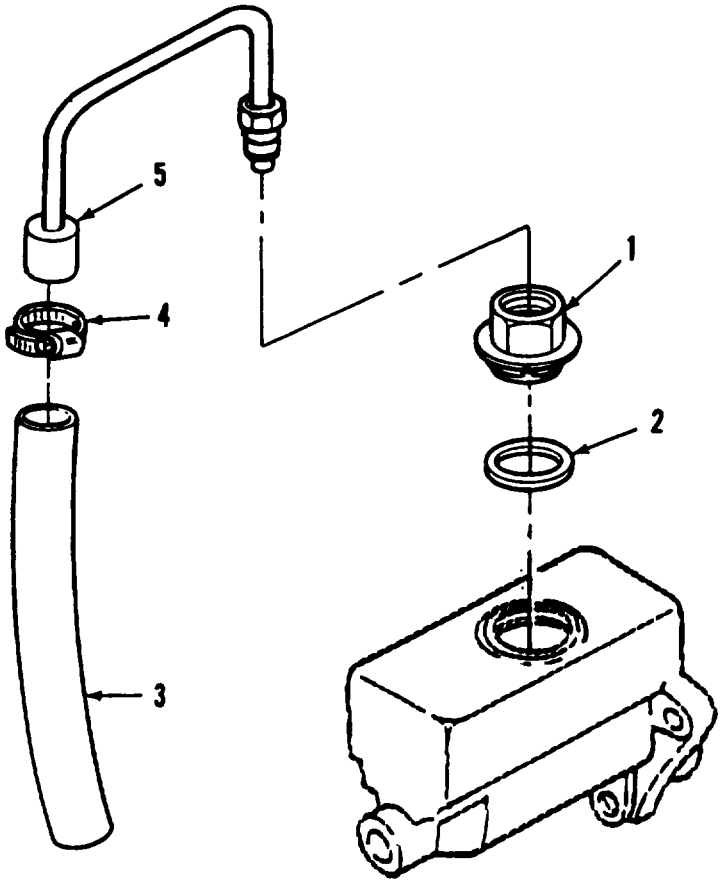

FIGURE 16. MASTER CYLINDER ASSEMBLY.

(1) ITEM NO	(2) SMR CODE	(3) CAGEC	(4) PART NUMBER	(5) DESCRIPTION AND USABLE ON CODES (UOC)	(6) QTY
				GROUP 1204 HYDRAULIC BRAKE SYSTEM FIG.16 MASTER CYLINDER ASSEMBLY	
1	PAOZZ	63477	7979691	CAP,FILLER OPENING	1
2	PAOZZ	34558	5922	GASKET	1
3	PAOZZ	96906	MS521301A204R	HOSE,NONMETALLIC UOC:151,265	1
4	PAOZZ	96906	MS35842-11	CLAMP,HOSE UOC:151,265	1
5	PAOZZ	23705	A298322	TUBE ASSEMBLY,METAL UOC:151,265	1

END OF FIGURE

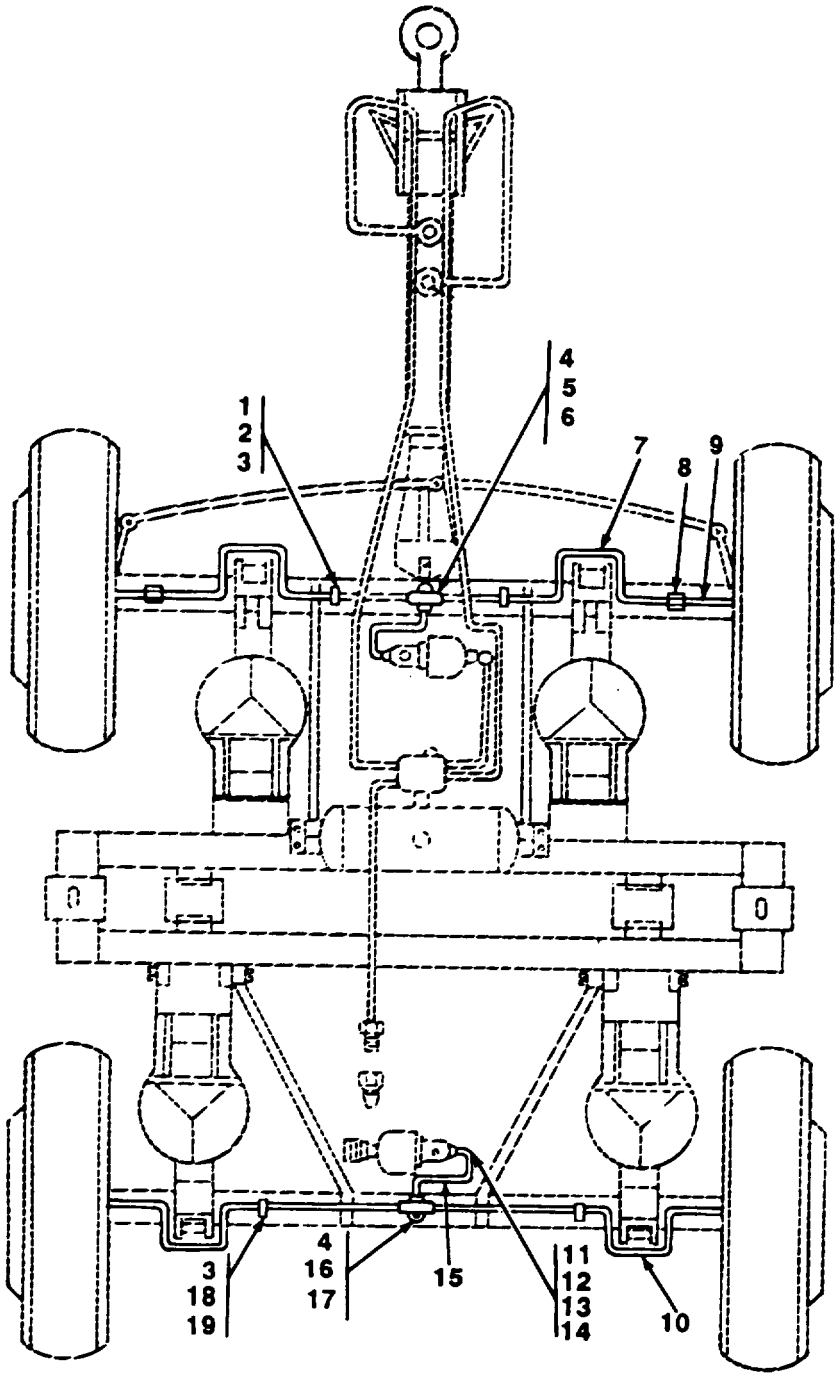

FIGURE 17. HYDRAULIC LINES AND FITTINGS (M689, M840).

(1) ITEM NO	(2) SMR CODE	(3) CAGEC	(4) PART NUMBER	(5) DESCRIPTION AND USABLE ON CODES (UOC)	(6) QTY
				GROUP 1204 HYDRAULIC BRAKE SYSTEM FIG.17 HYDRAULIC LINES AND FITTINGS (M689, M840)	
1	PAOZZ	96906	MS35207-264	SCREW,MACHINE UOC:151,265	11
2	PAOZZ	96906	MS35338-43	WASHER,LOCK UOC:151,265	12
3	PAOZZ	96906	MS21919WDG8	CLAMP,LOOP UOC:151,265	2
4	PAOZZ	63477	5167157	CONNECTOR,MULTIPLE	2
5	PAOZZ	96906	MS35338-45	WASHER,LOCK UOC:151,265	1
6	PAOZZ	96906	MS90726-29	BOLT,MACHINE UOC:151,265	1
7	PAOZZ	81902	BSK5789	HOSE ASSEMBLY,NONME UOC:151,265	2
8	PAOZZ	96906	MS35691-53	NUT,PLAIN,HEXAGON UOC:151,265	2
9	PAOZZ	19207	10947438-4	HOSE ASSEMBLY,NONME UOC:151,265	2
10	PAOZZ	19207	10947438-7	HOSE ASSEMBLY,NONME	2
11	PAOZZ	19207	10896714	CONNECTOR,MULTIPLE UOC:151,265	2
12	PAOZZ	19207	11674973-1	GASKET UOC:151,265	2
13	PAOZZ	19207	11674973-2	GASKET UOC:151,265	2
14	PAOZZ	19207	5167419	BOLT,FLUID PASSAGE UOC:151,265	2
15	PAOZZ	19207	10947438-5	HOSE ASSEMBLY,NONME UOC:151,265	2
16	PAOZZ	96906	MS90726-33	BOLT,MACHINE UOC:151,265	1
17	XBOZZ	96906	MS51992-13	NUT,PLAIN,HEXAGON UOC:151,265	1
18	PAOZZ	96906	MS21104D10	CLAMP,LOOP UOC:151,265	1
19	PAOZZ	96906	MS35207-268	SCREW,MACHINE UOC:151,265	1

END OF FIGURE

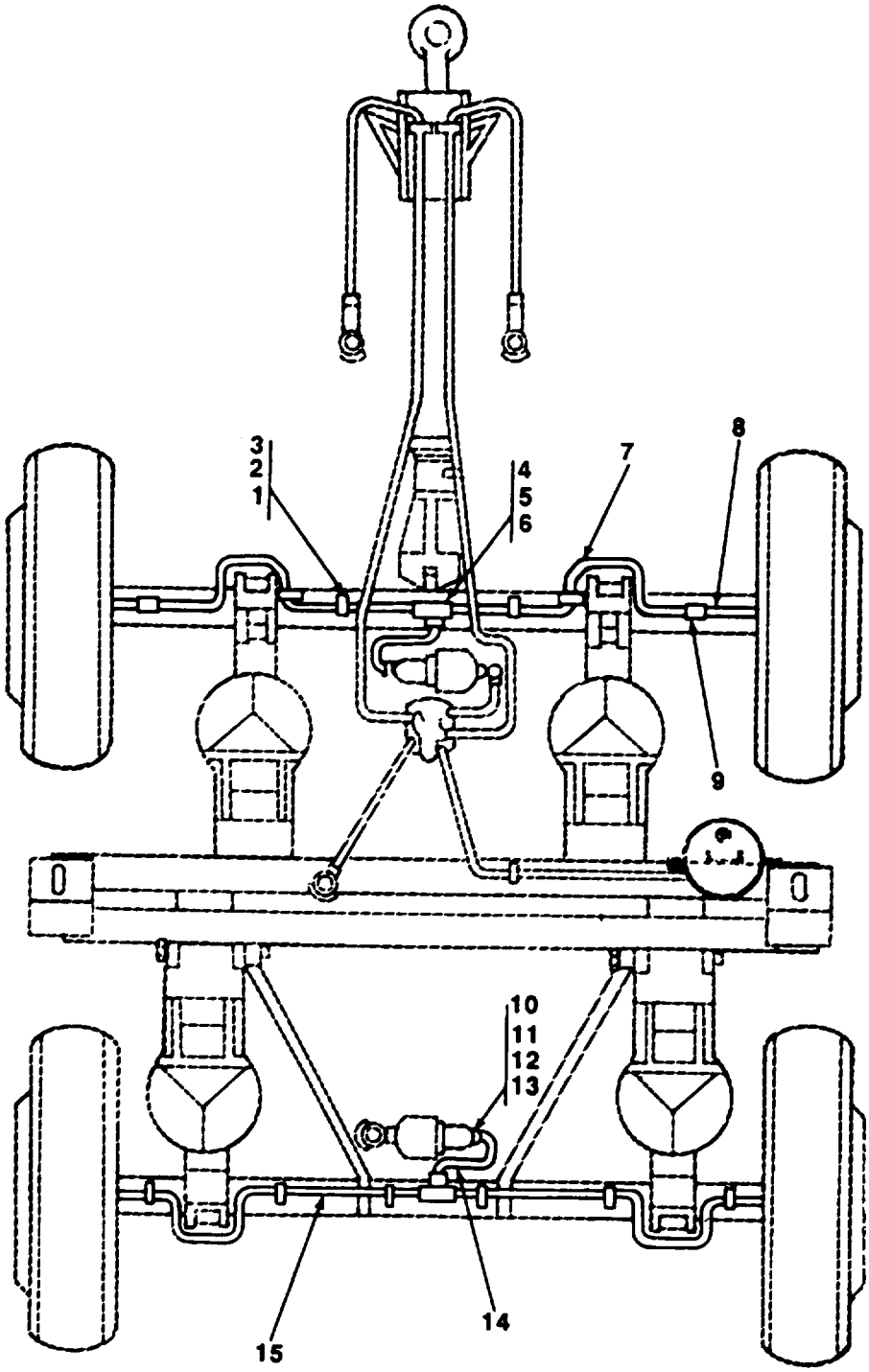

FIGURE 18. HYDRAULIC LINES AND FITTINGS (M832).

(1) ITEM NO	(2) SMR CODE	(3) CAGEC	(4) PART NUMBER	(5) DESCRIPTION AND USABLE ON CODES (UOC)	(6) QTY
				GROUP 1204 HYDRAULIC BRAKE SYSTEM FIG.18 HYDRAULIC LINES AND FITTINGS (M832)	
1	PAOZZ	96906	MS35207-264	SCREW,MACHINE UOC:C12	10
2	PAOZZ	96906	MS35338-43	WASHER,LOCK UOC:C12	10
3	PAOZZ	96906	MS21919WDG8	CLAMP,LOOP UOC:C12	10
4	PAOZZ	96906	MS90726-29	BOLT,MACHINE UOC:C12	2
5	PAOZZ	96906	MS35338-45	WASHER,LOCK UOC:C12	2
6	PAOZZ	63477	5167157	CONNECTOR,MULTIPLE, UOC:C12	2
7	PAOZZ	19207	10947438-3	HOSE ASSEMBLY,NONME UOC:C12	2
8	PAOZZ	19207	10947438-4	HOSE ASSEMBLY,NONME UOC:C12	2
9	PAOZZ	96906	MS35691-53	NUT,PLAIN,HEXAGON UOC:C12	2
10	PAOZZ	19207	5167419	BOLT,FLUID PASSAGE UOC:C12	2
11	PAOZZ	19207	11674973-1	GASKET UOC:C12	2
12	PAOZZ	19207	11674973-2	GASKET UOC:C12	2
13	PAOZZ	19207	10896714	CONNECTOR,MULTIPLE UOC:C12	2
14	PAOZZ	19207	10947438-5	HOSE ASSEMBLY,NONME UOC:C12	2
15	PAOZZ	19207	10947438-7	HOSE ASSEMBLY,NONME UOC:C12	2
				END OF FIGURE	

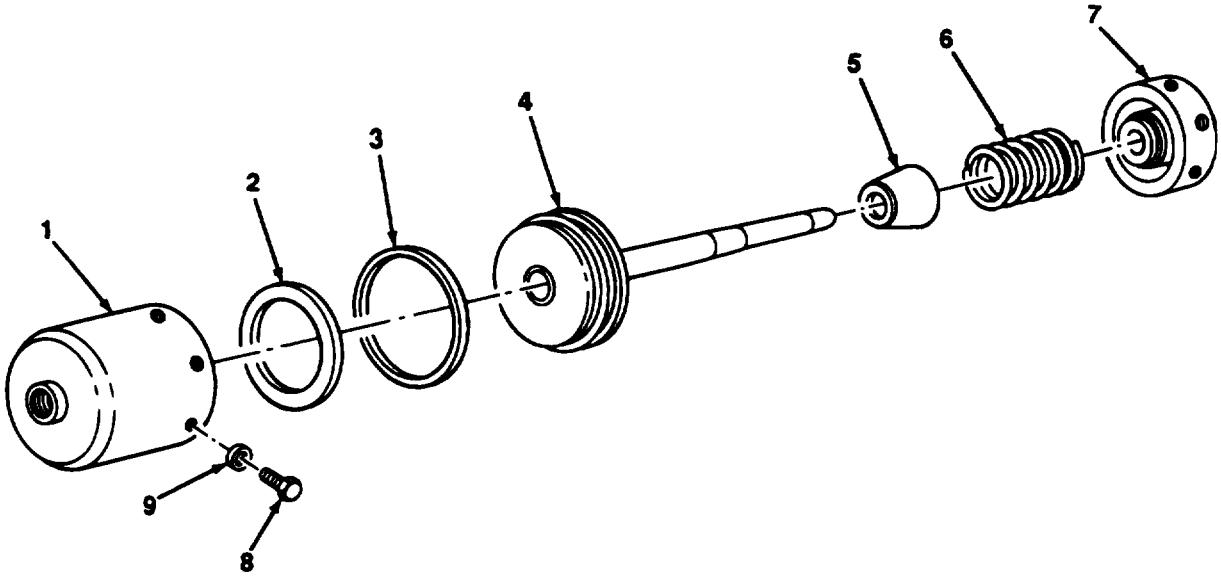

FIGURE 19. BRAKE AIR CYLINDER.

(1) ITEM NO	(2) SMR CODE	(3) CAGEC	(4) PART NUMBER	(5) DESCRIPTION AND USABLE ON CODES (UOC)	(6) QTY
				GROUP 1208 AIRBRAKE SYSTEM FIG.19 BRAKE AIR CYLINDER	
1	XAOZZ	18876	8017234	CYLINDER ASSEMBLY	1
2	PAOZZ	18876	8017063	SEAL,PLAIN	1
3	PAOZZ	18876	8017174	FELT,MECHANICAL,PRE	1
4	XAOZZ	18876	8017082	PISTON ASSEMBLY	1
5	PAOZZ	16662	AC2003D	BOOT,DUST AND MOIST	1
6	PAOZZ	18876	8017072	SPRING,HELICAL,COMP	1
7	XAOZZ	18876	8017069	HEAD ASSEMBLY	1
8	PAOZZ	96906	MS90725-31	BOLT,MACHINE	8
9	PAOZZ	96906	MS35338-45	WASHER,LOCK	8
				END OF FIGURE	

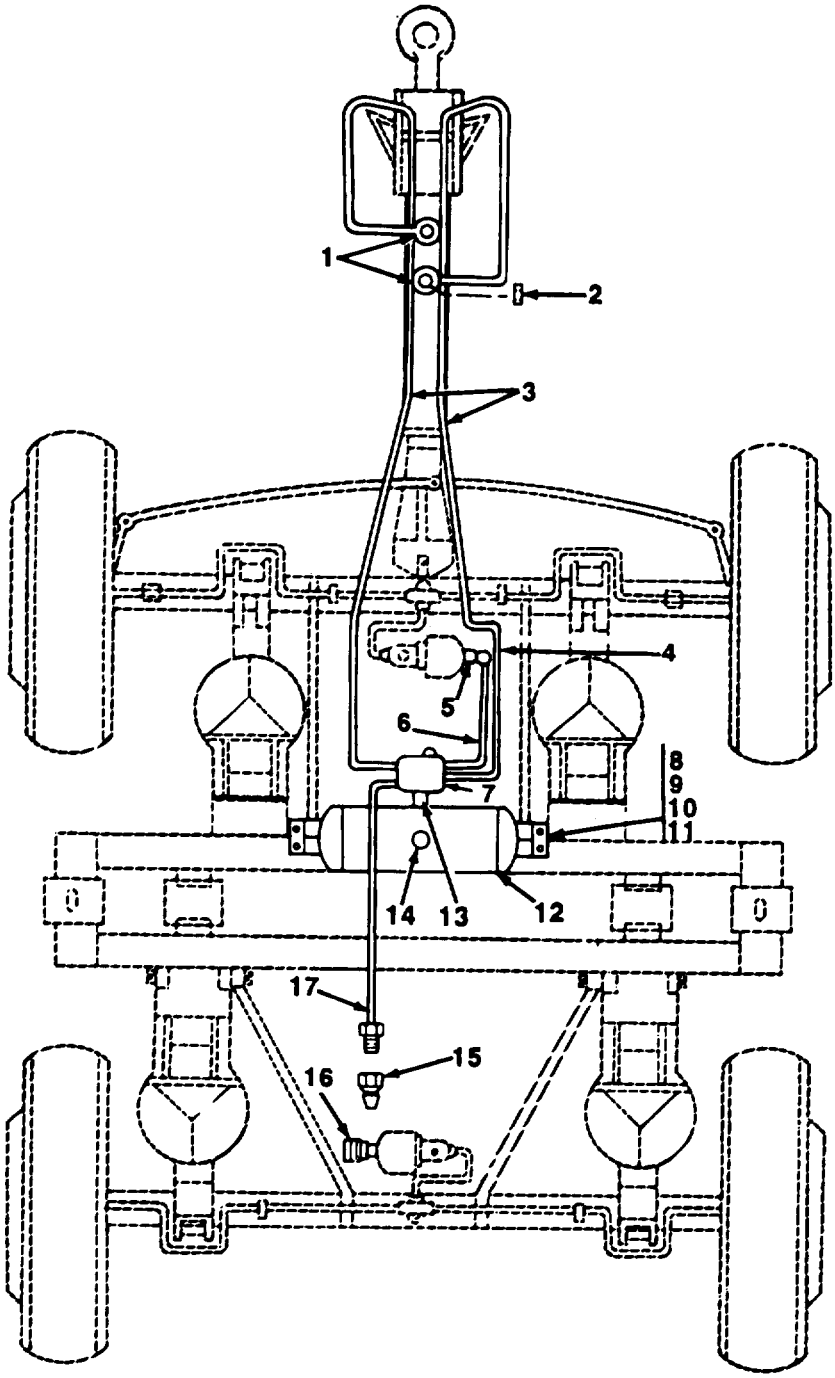

FIGURE 20. AIR LINES AND FITTINGS (M689, M840).

(1) ITEM NO	(2) SMR CODE	(3) CAGEC	(4) PART NUMBER	(5) DESCRIPTION AND USABLE ON CODES (UOC)	(6) QTY
				GROUP 1208 AIRBRAKE SYSTEM FIG.20 AIR LINES AND FITTINGS (M689, M849)	
1	PAOZZ	79146	MS35746-1	COUPLING HALF,QUICK UOC:151,265	2
2	PAOZZ	06853	213630	PACKING,PREFORMED PART OF MS35746-1 UOC:151,265	1
3	PAOZZ	81902	BSK5791	HOSE ASSEMBLY,NONME UOC:265	2
4	PAOZZ	96906	MS39230-2	ELBOW,PIPE UOC:151,265	1
5	PAOZZ	81495	S-738-11	BUSHING,PIPE REAR BACKING PLATE UOC:151,265	1
6	PAOZZ	19207	10947438-6	HOSE ASSEMBLY,NONME UOC:151,265	1
7	PAOZZ	96906	MS53004-2	PARTS KIT,RELAY VAL UOC:151,265	1
8	PAOZZ	96906	MS90725-60	SCREW,CAP,HEXAGON H UOC:151,265	4
9	PAOZZ	96906	MS27183-14	WASHER,FLAT UOC:151,265	4
10	PAOZZ	81718	H2525M	WASHER,LOCK UOC:151,265	4
11	PAOZZ	96906	MS51967-8	NUT,PLAIN,HEXAGON UOC:151,265	4
12	PAOZZ	16662	AD35779	TANK,PRESSURE UOC:151,265	1
13	PAOZZ	96906	MS51953-101	NIPPLE,PIPE UOC:151,265	1
14	PAOZZ	96906	MS35782-2	COCK,DRAIN UOC:151,265	1
15	PAOZZ	19207	10947430	COUPLING HALF,QUICK UOC:151,265	1
16	PAOZZ	88233	03080-0020	COUPLING HALF,QUICK UOC:151,265	1
17	PAOZZ	19207	10947438-1	HOSE ASSEMBLY,NONME UOC:151,265	1
				END OF FIGURE	

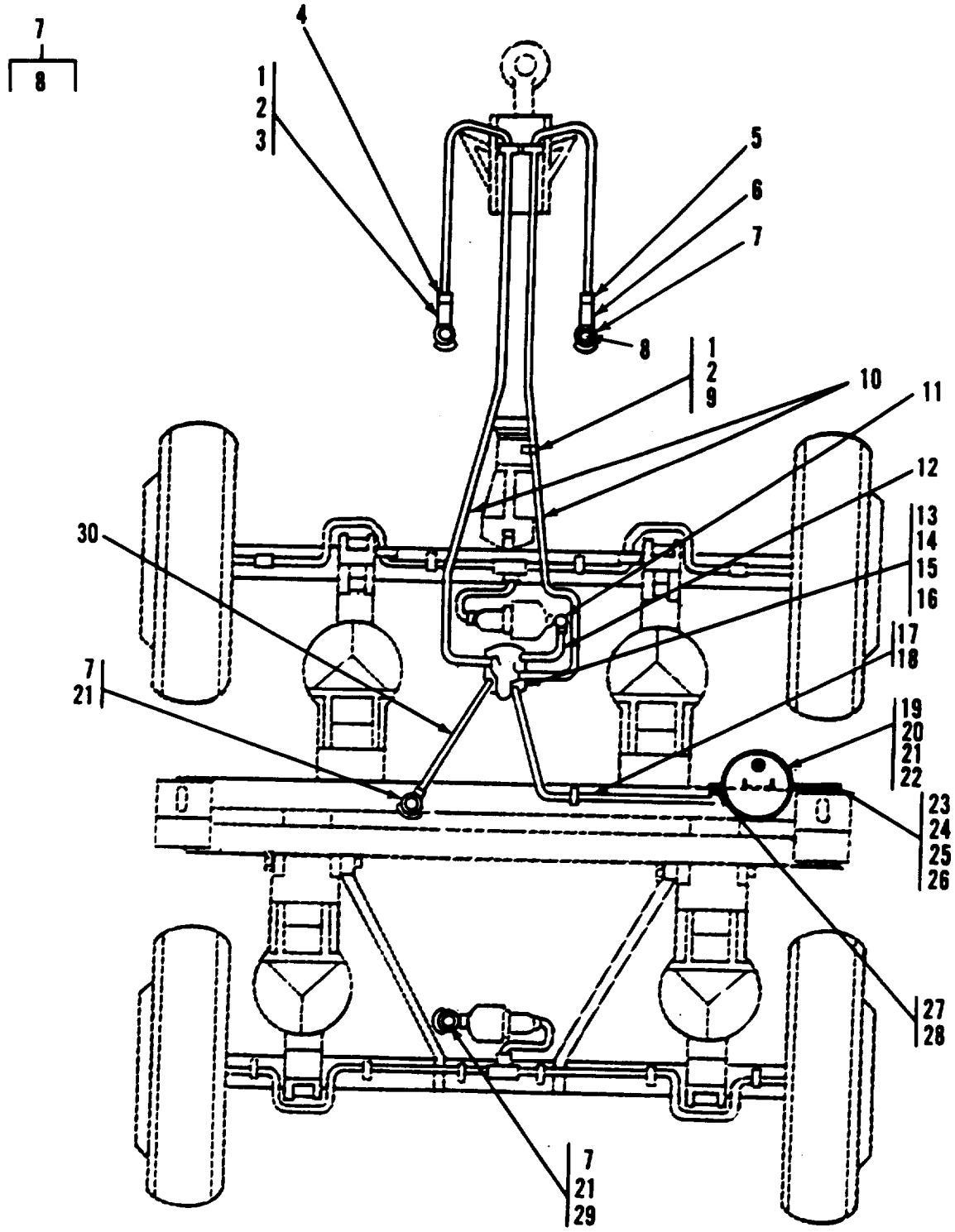

FIGURE 21. AIRLINES AND FITTINGS (M832).

(1) ITEM NO	(2) SMR CODE	(3) CAGEC	(4) PART NUMBER	(5) DESCRIPTION AND USABLE ON CODES (UOC)	(6) QTY
				GROUP 1208 AIRBRAKE SYSTEM FIG.21 AIR LINES AND FITTINGS (M832)	
1	PAOZZ	96906	MS21919WDG10	CLAMP,LOOP UOC:C12	4
2	PAOZZ	96906	MS35207-264	SCREW,MACHINE UOC:C12	4
4	PAOZZ	40342	N10790B	PLATE,INDENTIFICATIO UOC:C12	1
5	PAOZZ	40342	N10790C	PLATE,INDENTIFICATIO UOC:C12	1
6	PAOZZ	16662	AC3105	SPRING,HELICAL,EXTE UOC:C12	2
7	PAOZZ	79146	MS35746-1	COUPLING HALF,QUICK UOC:C12	4
8	PAOZZ	06853	213630	PACKING,PREFORMED PART OF MS35746-1 UOC:C12	1
9	PAOZZ	96906	MS35338-43	WASHER,LOCK UOC:C12	2
10	PAOZZ	19207	10947438-2	HOSE ASSEMBLY,NONME UOC:C12	2
11	PAOZZ	21450	120145	ELBOW,PIPE UOC:C12	1
12	PAOZZ	19207	10947438-20	HOSE ASSEMBLY,NONME UOC:C12	1
13	PAOZZ	96906	MS53004-2	PARTS KIT,RELAY VAL UOC:C12	1
14	PAOZZ	96906	MS90725-36	BOLT,MACHINE UOC:C12	3
15	PAOZZ	96906	MS27183-12	WASHER,FLAT UOC:C12	3
16	PAOZZ	96906	MS17829-5C	NUT,SELF-LOCKING,HE UOC:C12	3
17	PAOZZ	19207	10947438-18	HOSE ASSEMBLY,NONME UOC:C12	1
18	PAOZZ	05643	NP5041033	BUSHING,PIPE UOC:C12	1
19	PAOZZ	19207	11682378	TANK,PRESSURE UOC:C12	1
20	PAOZZ	96906	MS35782-3	COCK,DRAIN UOC:C12	1
21	PAOZZ	88044	AN912-4J	BUSHING,PIPE UOC:C12	1
22	PAOZZ	21450	444618	PLUG,PIPE UOC:C12	1
23	XBOZZ	19207	11682381	CLAMP,PRESSURE TANK UOC:C12	1
24	PAOZZ	96906	MS90725-60	SCREW,CAP,HEXAGON H UOC:C12	4
25	PAOZZ	96906	MS27183-14	WASHER,FLAT UOC:C12	2

(1) ITEM NO	(2) SMR CODE	(3) CAGEC	(4) PART NUMBER	(5) DESCRIPTION AND USABLE ON CODES (UOC)	(6) QTY
26	PAOZZ	81718	H2525M	WASHER,LOCK UOC:C12	2
27	PAOZZ	96906	MS90728=8	SCREW,CAP,HEXAGON H UOC:C12	1
28	PAOZZ	96906	MS35338-44	WASHER,LOCK UOC:C12	1
29	PAOZZ	88044	AN911-3J	NIPPLE,PIPE UOC:C12	1
30	PAOZZ	19207	10947438/1	HOSE ASSEMBLY,NONME UOC:C12	1

END OF FIGURE

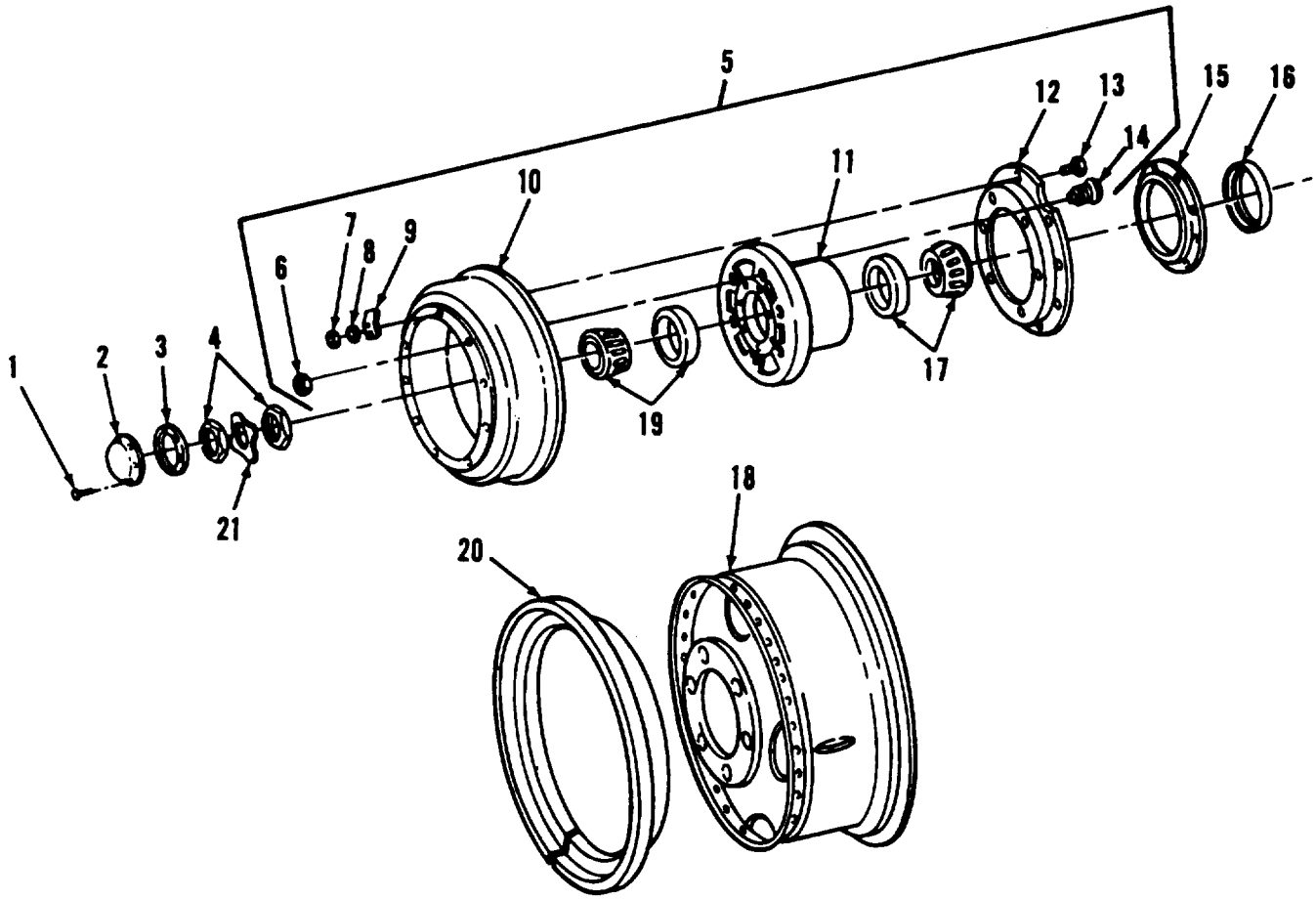

FIGURE 22. HUB ASSEMBLY AND DRUM.

(1) ITEM NO	(2) SMR CODE	(3) CAGEC	(4) PART NUMBER	(5) DESCRIPTION AND USABLE ON CODES (UOC)	(6) QTY
				GROUP 13 WHEELS AND TRACKS	
				GROUP 1311 WHEEL ASSEMBLY	
				FIG.22 HUB ASSEMBLY AND DRUM	
1	PAOZZ	96906	MS90725-31	BOLT,MACHINE	32
2	PAOZZ	78500	3262H86	CAP,GREASE	4
				UOC:151,265	
3	PAOZZ	19207	10896731	GASKET	4
4	PAOZZ	19207	7521633	NUT,PLAIN,OCTAGON	8
5	PAOFO	19207	7529053	HUB,WHEEL,VEHICULAR LEFT HAND	2
5	PAOFF	19207	7529054	HUB,WHEEL,VEHICULAR RIGHT HAND	2
6	PAOZZ	96906	MS51983-1	.NUT,PLAIN,SINGLE BA LEFT HAND	6
6	PAOZZ	96906	MS51983-2	.NUT,PLAIN,SINGLE BA RIGHT HAND	6
7	PAOZZ	96906	MS51968-8	.NUT,PLAIN,HEXAGON	10
8	PAOZZ	81718	H2525M	.WASHER,LOCK	10
9	PAOZZ	19207	10896733	.COVER,ACCESS	1
10	PAOZZ	19207	10896696	.BRAKE DRUM	1
11	PAOZZ	19207	10896708	.HUB,WHEEL,VEHICULAR	1
12	PAOZZ	19207	7521636	.ADAPTER,BRAKE DRUM	1
13	PAOZZ	19207	10896689	.BOLT,RIBBED SHOULDE	10
14	PAOZZ	19207	10896719-1	.BOLT,RIBBED SHOULDE LEFT HAND	6
14	PAOZZ	19207	10896719-2	.BOLT,RIBBED SHOULDE RIGHT HAND	6
15	PAOZZ	19207	7521654	DEFLECTOR,DIRT AND	4
16	PAOZZ	19207	10896684	SEAL,PLAIN ENCASED	4
17	PAOZZ	96906	MS19081-112	BEARING,ROLLER,TAPE	4
18	PAOZZ	96906	MS53044-5	WHEEL,PNEUMATIC TIR	4
				UOC:C12,265	
19	PAOZZ	19207	10948079	BEARING,ROLLER,TAPE	4
20	PAOZZ	96906	MS53045-3	RING,SIDE,AUTOMOTIV	4
21	PAOZZ	78500	1229G969	WASHER,KEY	1

END OF FIGURE

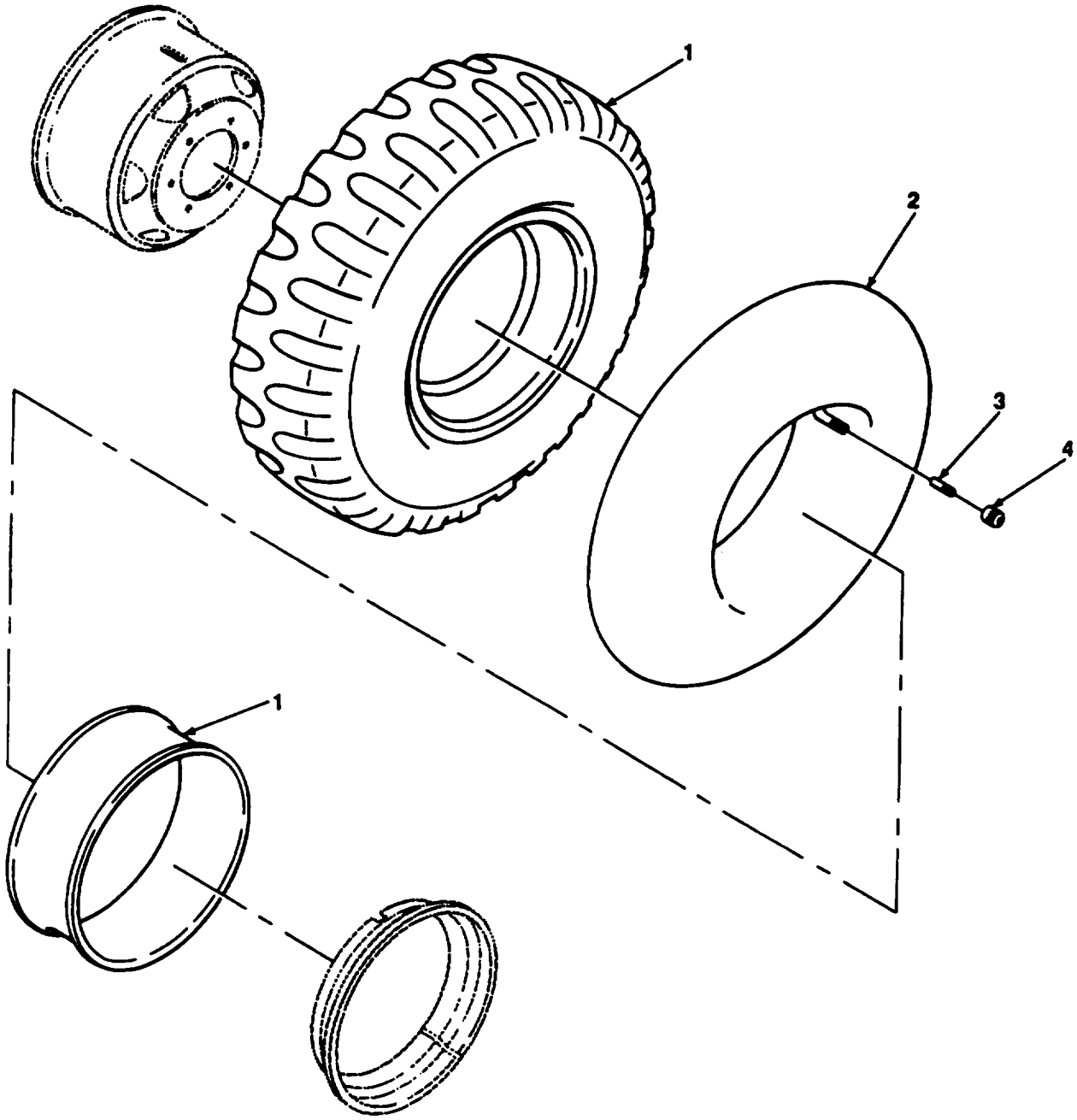

FIGURE 23. TIRE AND TUBE.

(1) ITEM NO	(2) SMR CODE	(3) CAGEC	(4) PART NUMBER	(5) DESCRIPTION AND USABLE ON CODES (UOC)	(6) QTY
				GROUP 1313 TIRES, TUBES, TIRE CHAINS	
				FIG.23 TIRE AND TUBE	
1	PCOHH	81348	9.00-20/D/TBCC	TIRE,PNEUMATIC	4
2	PAOZZ	23862	2289994	INNER TUBE,PNEUMATI	4
3	PAOZZ	17875	100AA	VALVE CORE	4
4	PAOZZ	08588	600R	CAP,PNEUMATIC VALVE	4

END OF FIGURE

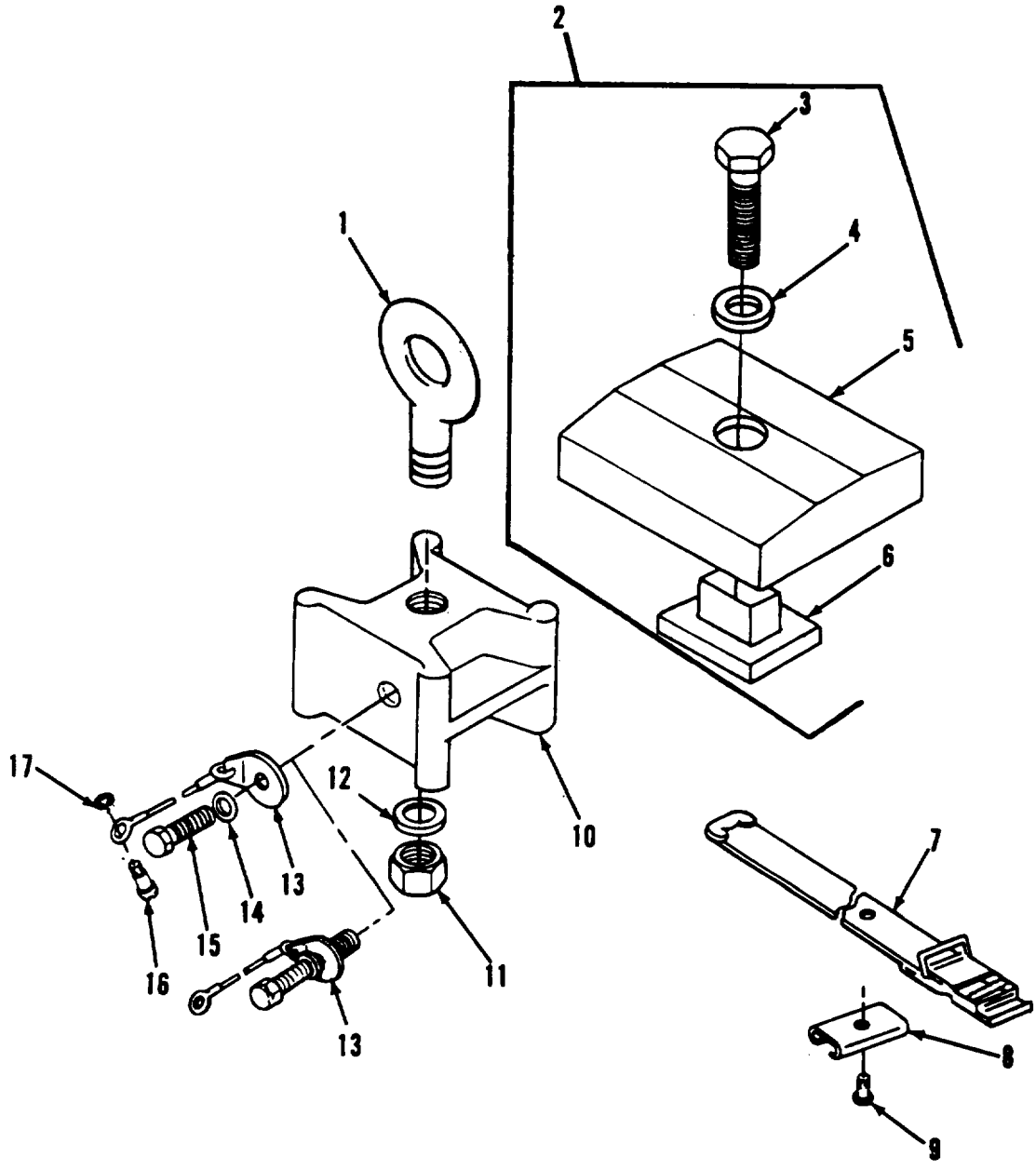

FIGURE 24. TRANSPORTER CLAMP AND BLOCK (M689, M832).

(1) ITEM NO	(2) SMR CODE	(3) CAGEC	(4) PART NUMBER	(5) DESCRIPTION AND USABLE ON CODES (UOC)	(6) QTY
				GROUP 15 FRAME, TOWING ATTACHMENTS, DRAWBARS, AND ARTICULATION SYSTEMS GROUP 1501 FRAME ASSEMBLY FIG.24 TRANSPORTER CLAMP AND BLOCK (M689, M832)	
1	PAOZZ	19207	10947411	BOLT,EYE UOC:C12,265	2
2	PFOZZ	19207	11588276	GRIP,CABLE,JAW	2
3	PAOZZ	80204	B1821BH075C325N	.SCREW,CAP,HEXAGON H PART OF PN 11588276 UOC:C12,265	1
4	PAOZZ	96906	MS35338-51	.WASHER,LOCK PART OF PN11588276 UOC:C12,265	1
5	XAOZZ	19207	11588295	.BRACKET PART OF PN 11588276 UOC:C12,265	1
6	PAOZZ	81902	33048	.BLOCK,COUPLING PART OF PN 11588276 UOC:C12,265	1
7	PAOZZ	19207	11588352-4	STRAP,WEBBING	2
8	PAOZZ	19207	12269866	STRAP,RETAINING	2
9	PAOZZ	96906	MS35207-264	SCREW,MACHINE	2
10	PAOZZ	19207	11649079	BLOCK,RETAINING,FRA UOC:C12	2
11	PAOZZ	96906	MS51967-23	NUT,PLAIN,HEXAGON UOC:C12,265	2
12	PAOZZ	96906	MS27183-23	WASHER,FLAT UOC:C12,265	2
13	PAOZZ	19207	12313026	SCREW,ASSEMBLED WAS USED ON SUSPENSION BAR WITH THE UPPER BAR UOC:C12	2
13	PFOZZ	19207	11588351-1	WIRE ROPE USED ON SUSPENSION BAR WITHOUT THE UPPER BAR UOC:C12	2
14	PAOZZ	96906	MS35338-51	WASHER,LOCK UOC:C12,265	2
15	PAOZZ	19207	11588350	BOLT,EXTERNALLY REL UOC:C12,265	2
16	PAOZZ	96906	MS51575-16	SCREW,CAP,HEX SN J089-001 THRU 159 & J017-160 THRU 350 UOC:C12	2
17	PAOZZ	96906	MS35338-43	WASHER,LOCK UOC:C12	2
18	PAFZZ	96906	MS122088	INSERT,SCREW THREAD UOC:C12,265	4
				END OF FIGURE	

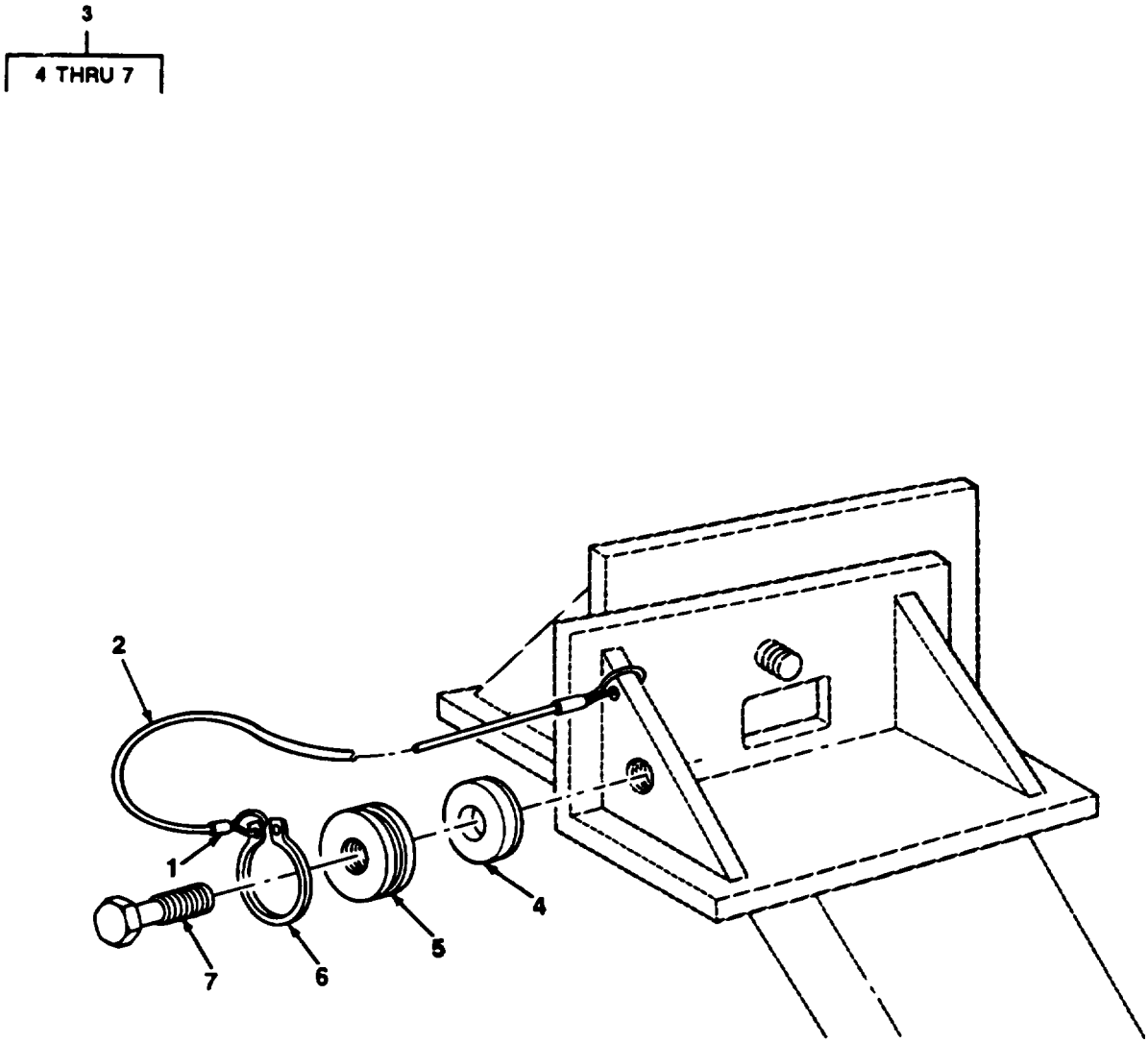

FIGURE 25. BINDER ASSEMBLY (M840).

(1) ITEM NO	(2) SMR CODE	(3) CAGEC	(4) PART NUMBER	(5) DESCRIPTION AND USABLE ON CODES (UOC)	(6) QTY
				GROUP 1501 FRAME ASSEMBLY FIG.25 BINDER ASSEMBLY (M840)	
1	PAOZZ	19207	8537648	SWAGING SLEEVE,WIRE UOC:151	2
2	PAOZZ	81349	M83420/3-004	ROPE,WIRE UOC:151	1
3	PAOZZ	19207	11612169	BINDER,STABILIZER R UOC:151	4
4	XAOZZ	19207	11612329-2	.WASHER,FLAT UOC:151	1
5	XAOZZ	19207	11612168	.NUT UOC:151	1
6	PAOZZ	96906	MS16624-1225	.RING,RETAINING UOC:151	1
7	XAOZZ	19207	11612186	.BOLT UOC:151	1
				END OF FIGURE	

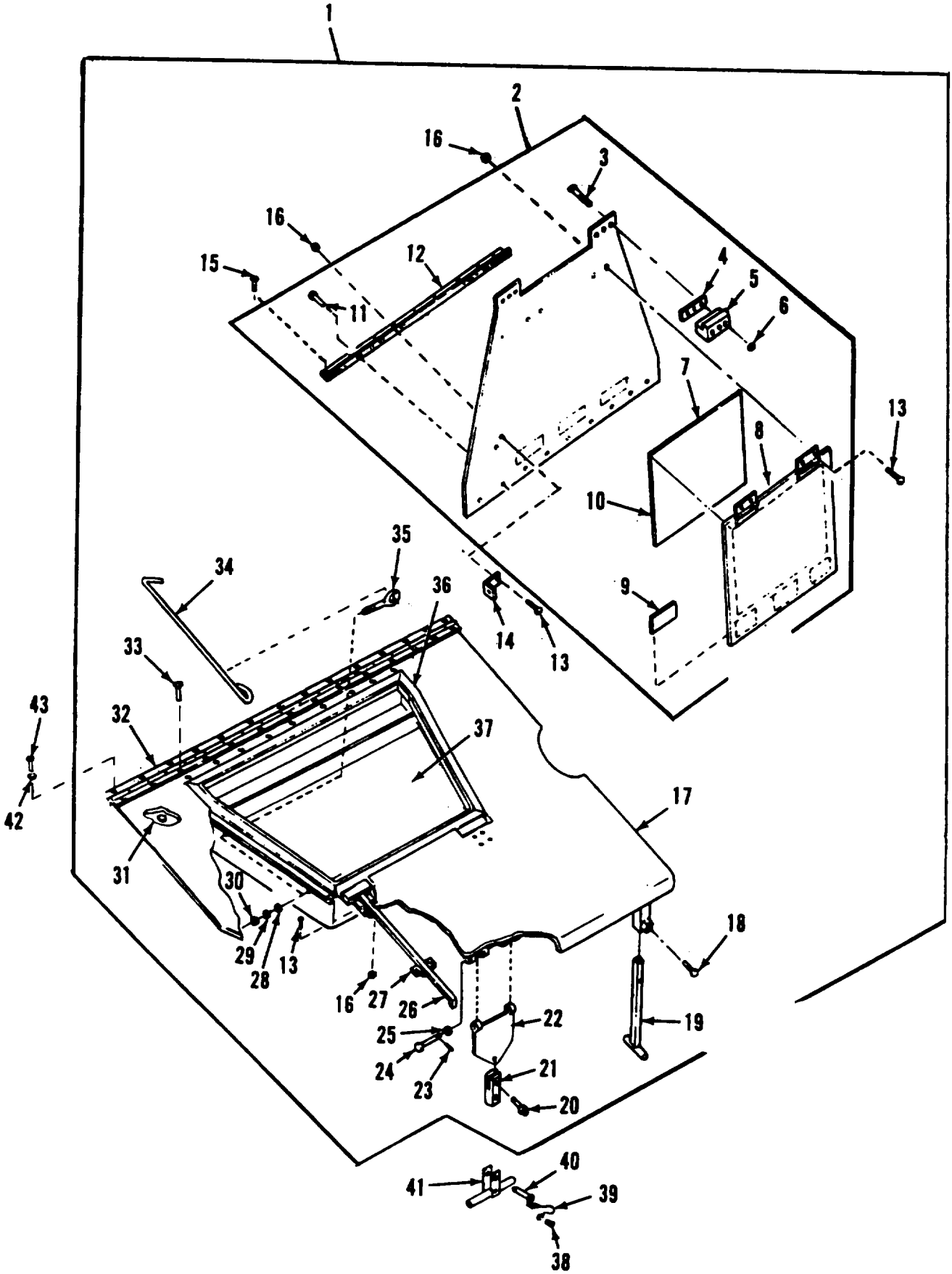

FIGURE 26. PLATFORM ASSEMBLY (M832).

(1) ITEM NO	(2) SMR CODE	(3) CAGEC	(4) PART NUMBER	(5) DESCRIPTION AND USABLE ON CODES (UOC)	(6) QTY
				GROUP 1501 FRAME ASSEMBLY FIG.26 PLATFORM ASSEMBLY (M832)	
1	AOOOO	19207	11649031	PLATFORM ASSY UOC:C12	1
1	AOOOO	19207	12440404	PLATFORM ASSY SN J089-001 THRU 159 & J017-160 THRU 350 UOC:C12	1
2	XBOOO	19207	11649033	.COVER ASSEMBLY UOC:C12	1
3	PAOZZ	96906	MS51960-88	..SCREW,MACHINE UOC:C12	6
4	XBOZZ	19207	11649116	..SHIM UOC:C12	4
5	PAOZZ	19207	11649117	..STRIKE,CATCH UOC:C12	2
6	PAOZZ	96906	MS21083N04	..NUT,SELF-LOCKING,HE UOC:C12	6
7	MOOZZ	19207	12331681-2	..PADDING MAKE FROM PN MIL-P-15280, 16 X 11.31 INCHES UOC:C12	1
8	PFOZZ	19207	12331681	..COVER UOC:C12	1
9	MOOZZ	19207	12331681-3	..FASTENER MAKE FROM PN MIL-F-21840, 4 INCHES LONG. SN-J089-001 THRU 159 & J017-160 THRU 350 UOC:C12	3
10	XBOZZ	19207	11649118	..COVER UOC:C12	1
11	PAOZZ	96906	MS20426AD8-10	..RIVET,SOLID UOC:C12	9
12	MOOZZ	96906	MS20257C6-2600	..HINGE MAKE FROM PN MS20257C6-7200, 26 INCHES LONG UOC:C12	1
13	PAOZZ	96906	MS51960-66	.SCREW,MACHINE UOC:C12	18
14	PFOZZ	19207	12440377	.BRACKET EYE SN J089-001 THRU 159 & J017-160 THRU 350 UOC:C12	1
15	PAOZZ	96906	MS51957-83	.SCREW,MACHINE UOC:C12	9
16	PAOZZ	96906	MS21083C3	.NUT,SELF-LOCKING,HE UOC:C12	18
17	XBOZZ	19207	11649127	.PLATFORM UOC:C12	1
17	PFOZZ	19207	12440406	.PLATFORM SN J089-001 THRU 159 & J017-160 THRU 350 UOC:C12	1
18	PAOZZ	80204	B1821BH025F100N	.SCREW,CAP,HEXAGON H UOC:C12	2
19	PFOZZ	19207	11648942	.LEG,SEMITRAILER RET UOC:C12	2

(1) ITEM NO	(2) SMR CODE	(3) CAGEC	(4) PART NUMBER	(5) DESCRIPTION AND USABLE ON CODES (UOC)	(6) QTY
20	PAOZZ	96906	MS16562-77	.PIN,SPRING UOC:C12	1
21	PAOZZ	19207	11649121	.LINK,CONNECTOR UOC:C12	1
22	PAOZZ	19207	11649123	.LEAF,BUTT HINGE UOC:C12	1
23	PAOZZ	24617	103374	.PIN,COTTER UOC:C12	2
24	PAOZZ	96906	MS20392-7C91	.PIN,STRAIGHT,HEADED UOC:C12	2
25	PAOZZ	96906	MS27183-18	.WASHER,FLAT UOC:C12	2
26	PAOZZ	19207	11649128	.LATCH SET,MORTISE UOC:C12	2
27	MOOZZ	19207	11649120	.GUIDE MAKE FROM PN QQ-A-250/8, 1 X 2 15/16 INCHES UOC:C12	2
28	PAOZZ	96906	MS27183-10	.WASHER,FLAT SN J089-001 THRU 159 & J017-160 THRU 350 UOC:C12	2
29	PAOZZ	96906	MS35340-44	.WASHER,LOCK SN J089-001 THRU 159 & J017-160 THRU 350 UOC:C12	2
30	PAOZZ	96906	MS51967-2	.NUT SN J089-001 THRU 159 & J017-160 THRU 350 UOC:C12	2
31	PAOZZ	96906	MS17830-4C	.NUT,SELF-LOCKING,HE UOC:C12	9
32	MOOZZ	96906	MS20257C6-4400	.HINGE MAKE FROM PN M520257C6-7200, 44 INCHES LONG UOC:C12	1
33	PAOZZ	96906	MS20426AD8-8	.RIVIT SOLID UOC:C12	15
34	PFOZZ	19207	12440378	.PROP TOOLBOX SN J089-001 THRU 159 & J017-160 THRU 350 UOC:C12	1
35	PAOZZ	96906	MS51937-1C	.EYE BOLT SN J089-001 THRU 159 & J017-160 THRU 350 UOC:C12	2
36	PAOZZ	19207	11649078	.SEAL,NONMETALLIC AN UOC:C12	1
37	PAOZZ	19207	11649032	.BOX,ACCESSORIES STO UOC:C12	1
38	PAOZZ	96906	MS35207-264	SCREW,MACHINE UOC:C12	1
39	PAOZZ	19207	11649073	WIRE ROPE ASSEMBLY UOC:C12	1
40	PAOZZ	96906	MS17984-C818	PIN,QUICK RELEASE UOC:C12	1
41	PAOZZ	19207	11649071	CLEVIS,PLATFORM ASS UOC:C12	1
42	PAOZZ	96906	MS35338-44	WASHER,LOCK	15

(1) ITEM NO	(2) SMR CODE	(3) CAGEC	(4) PART NUMBER	(5) DESCRIPTION AND USABLE ON CODES (UOC)	(6) QTY
				UOC:C12	
43	PAOZZ	96906	MS35206-281	SCREW,MACHINE UOC:C12	15

END OF FIGURE

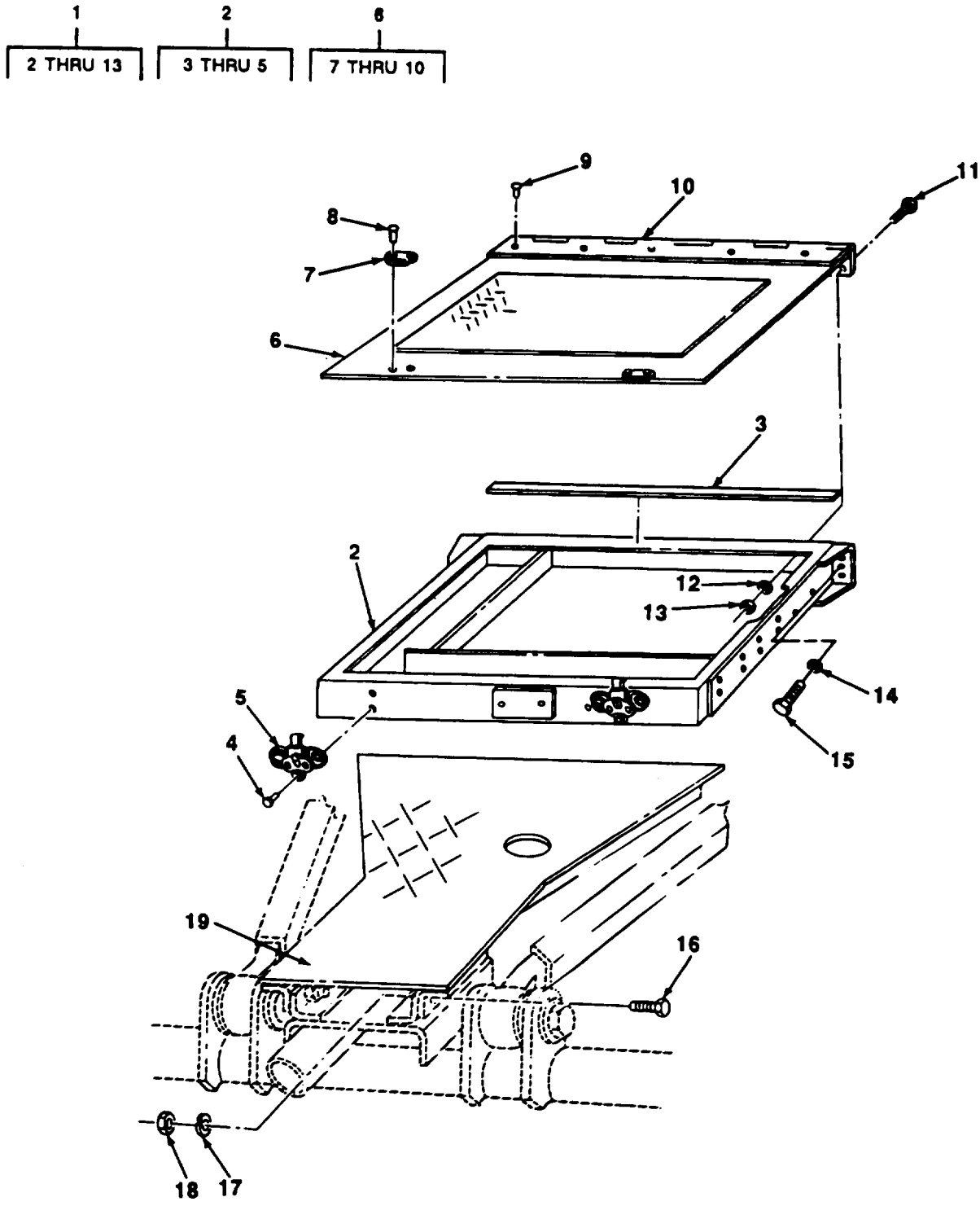

FIGURE 27. PLATFORM ASSEMBLY (M840).

(1) ITEM NO	(2) SMR CODE	(3) CAGEC	(4) PART NUMBER	(5) DESCRIPTION AND USABLE ON CODES (UOC)	(6) QTY
				GROUP 1501 FRAME ASSEMBLY FIG. 27 PLATFORM ASSEMBLY (M840)	
1	PFOOF	19207	11652401	BOX,ACCESSORIES STO UOC:151	1
2	XBOOO	19207	11652388	.TOOLBOX UOC:151	1
3	PAOZZ	19207	11652365-2	..RUBBER STRIP UOC:151	2
4	PAOZZ	96906	MS20470A4-6	..RIVET,SOLID UOC:151	4
5	PAOZZ	82240	B1900-377	..CATCH,CLAMPING UOC:151	2
6	PBOZZ	19207	11652363	..DOOR,ACCESS UOC:151	1
7	XBOZZ	19207	11652442	..CATCH UOC:151	2
8	PAOZZ	96906	MS20426A4-7	..RIVET,SOLID UOC:151	4
9	PAOZZ	96906	MS20426A6-9	..RIVET,SOLID UOC:151	5
10	XBOZZ	19207	11652362	..HINGE UOC:151	1
11	PAOZZ	96906	MS35206-262	.SCREW,MACHINE UOC:151	5
12	PAOZZ	96906	MS35338-43	.WASHER,LOCK UOC:151	5
13	PAOZZ	96906	MS35649-202	.NUT,PLAIN,HEXAGON UOC:151	5
14	PAOZZ	96906	MS27183-10	WASHER,FLAT UOC:151	6
15	PAOZZ	96906	MS21094-4004	BOLT,SELF-LOCKING UOC:151	6
16	PAOZZ	96906	MS90725-60	SCREW,CAP,HEXAGON H UOC:151	8
17	PAOZZ	81718	H2525M	WASHER,LOCK UOC:151	8
18	PPAOZZ	96906	MS51967-8	NUT,PLAIN,HEXAGON UOC:151	8
19	XBOZZ	19207	11652403	STEP PLATE ASSEMBLY UOC:151	1
				END OF FIGURE	

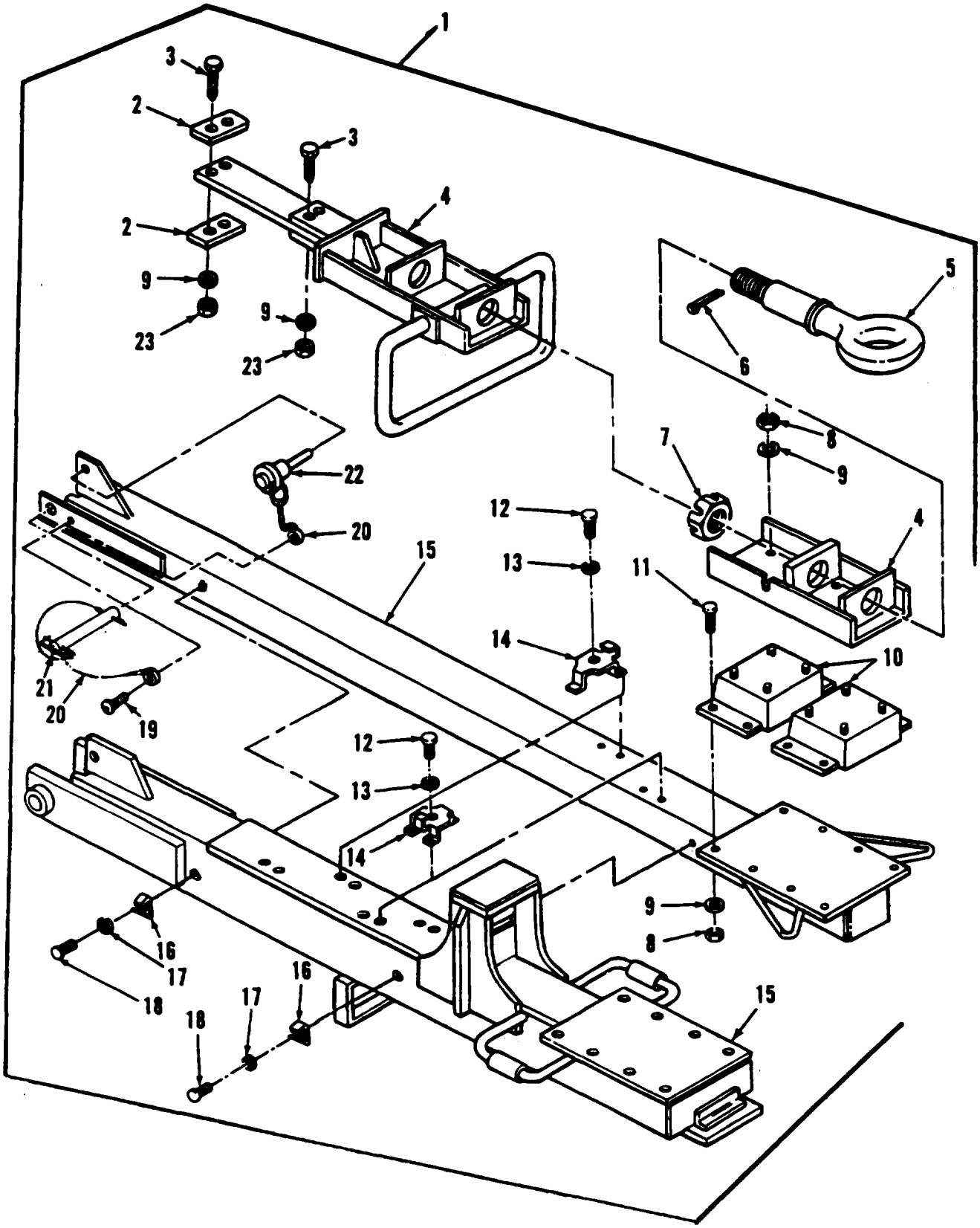

FIGURE 28. DRAWBAR.

(1) ITEM NO	(2) SMR CODE	(3) CAGEC	(4) PART NUMBER	(5) DESCRIPTION AND USABLE ON CODES (UOC)	(6) QTY
				GROUP 1503 PINTLES AND TOWING ATTACHMENTS FIG.28 DRAWBAR	
1	PBOZZ	19207	11588273	TOWBAR,MOTOR VEHICL UOC:151,265	1
1	PBOZZ	19207	12255287	DRAWBAR ASSEMBLY AFTER M840 CONTRACT 76-C-0053: M832 CONTRACT 73-C-0225 UOC:C12,151	1
1	PBOOO	19207	12440430	DRAWBAR ASSEMBLY SN J089-001 THRU 159 & J017-160 THRU 350 UOC:C12	1
2	PFOZZ	19207	12436739	.BLOOK,STOP SN J089-001 THRU 159 & J017-160 THRU 350 UOC:C12	2
3	PAOZZ	80204	MS90727-116	.SCREW SN J089-001 THRU 159 & J017-160 THRU 350 UOC:C12	4
4	XBOZZ	19207	11588272	.ADAPTER,DRAWBAR	1
4	PBOZZ	19207	12436749	.ADAPTER GUIDED COUP SN J089-001 THRU 159 & J017-160 THRU 350 UOC:C12	1
5	PAOZZ	96906	MS51337-1	.COUPLER,DRAWBAR,RIN	1
6	PAOZZ	96906	MS24665-629	.PIN,COTTER	1
7	PAOZZ	24617	451358	.NUT,PLAIN,SLOTTED,H	1
8	PAOZZ	96906	MS51968-14	.NUT,PLAIN,HEXAGON UOC:C12,265	16
8	PAOZZ	96906	MS51967-8	.NUT,PLAIN,HEXAGON	16
9	PAOZZ	96906	MS35338-48	.WASHER,LOCK	20
10	PAOZZ	76005	J-5864-102	.MOUNT,RESILIENT	2
11	PAOZZ	96906	MS90727-111	.SCREW,CAP,HEXAGON H	8
12	PAOZZ	96906	MS90726-31	.BOLT,MACHINE	4
13	PAOZZ	96906	MS35338-45	.WASHER,LOCK	4
14	PAOZZ	06853	212227	.DUMMY COUPLING,AUTO	2
15	XAOZZ	19207	11588271	.DRAWBAR UOC:151,265	1
15	XAOZZ	19207	12255286	.DRAWBAR AFTER M840 COTRACT 76-C-0053: M832 CONTRACT 73-C-0225 UOC:C12,151	1
15	XAOZZ	19207	12436750	.DRAWBAR SN J089-001 THRU 159 & J017-160 THRU 350 UOC:C12	1
16	XBOZZ	19207	10922126	.CLIP,SPRING TENSION	4
17	PAOZZ	96906	MS35338-42	.WASHER,LOCK	4
18	PAOZZ	96906	MS35206-243	.SCREW,MACHINE	4
19	PAOZZ	96906	MS24629-38	.SCREW,TAPPING	1
20	PAOZZ	19207	10947252	.WIRE ROPE ASSEMBLY, SN J089-001 THRU 159 & J017-160 THRU 350	2
21	PAOZZ	19207	11612194-3	.PIN,STRAIGHT,HEADLE	1
21	PAOZZ	19207	11612194-4	.PIN,STRAIGHT,HEADLE AFTER M840 CONTRACT 76-C-0053: M832 CONTRACT	1

(1) ITEM NO	(2) SMR CODE	(3) CAGEC	(4) PART NUMBER	(5) DESCRIPTION AND USABLE ON CODES (UOC)	(6) QTY
				73-C-0225 UOC:C12,151	
22	PAOZZ	96906	MS17984-C616	.PIN,QUICK RELEASE	1
23	PAOZZ	96906	MS51968-15	.NUT,PLAIN,HEXAGON SN J089-001 THRU 159 & J017-160 THRU 350 UOC:C12	4

END OF FIGURE

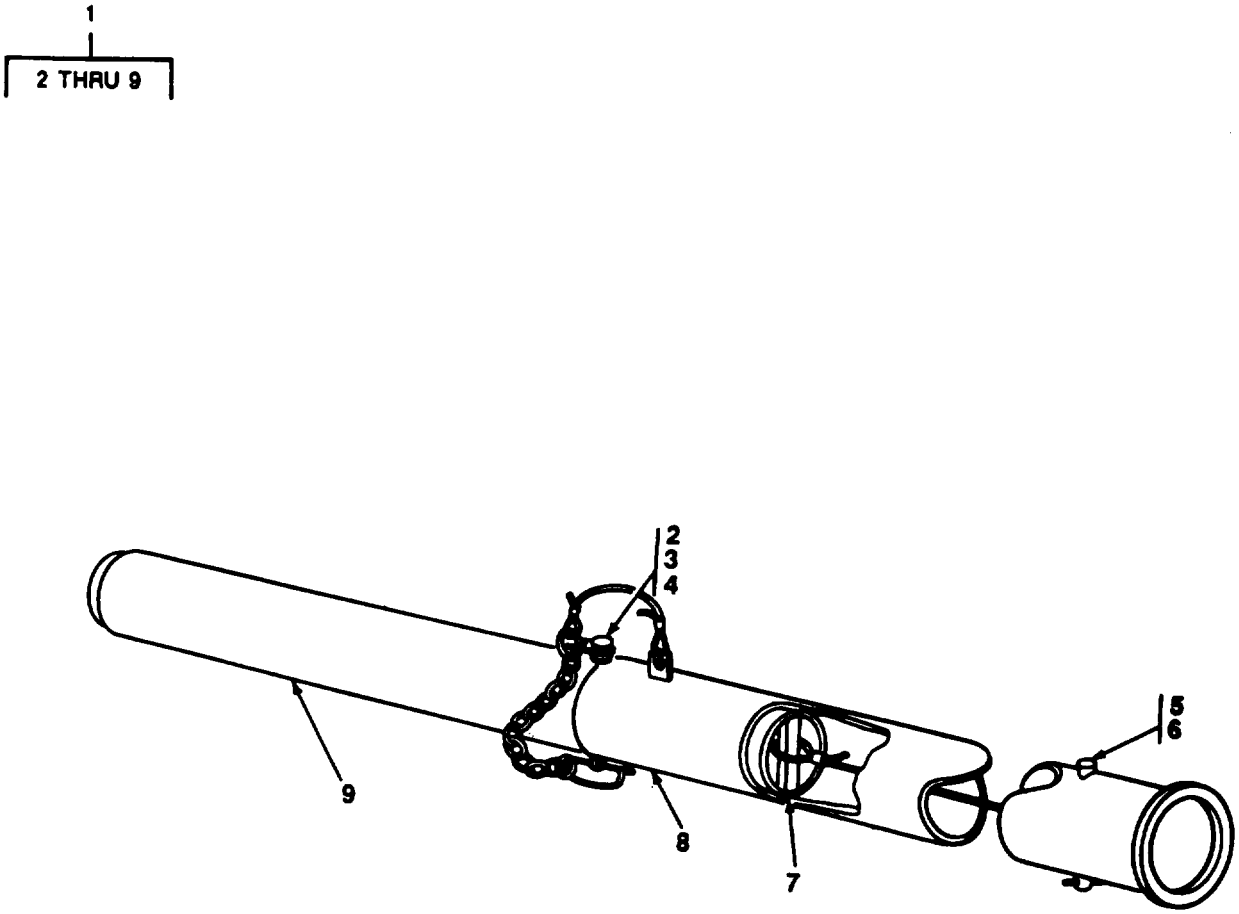

FIGURE 29. POSITIONING LEVER (M840).

(1) ITEM NO	(2) SMR CODE	(3) CAGEC	(4) PART NUMBER	(5) DESCRIPTION AND USABLE ON CODES (UOC)	(6) QTY
				GROUP 1503 PINTLES AND TOWING ATTACHMENTS FIG.29 POSITIONING LEVER (M840)	
1	PAOZZ	19207	11652399	TORQUE ROD,TANDEM A UOC:151	1
2	PAOZZ	81337	5-4-4783	SWAGING SLEEVE,WIRE PART OF 11652399 UOC:151	2
3	PAOZZ	19207	7357975-1	PIN,STRAIGHT,HEADED PART OF 11652399 UOC:151	1
4	PAOZZ	81349	MIL-W-83420	CABLE PART OF 11652399 UOC:151	1
5	XAOZZ	19207	11652356	PIN,CLEVIS PART OF 11652399 UOC:151	1
6	PAOZZ	96906	MS16562-35	PIN,SPRING PART OF 11652399 UOC:151	1
7	XAOZZ	19207	11652374	GUIDE PAT OF 11652399 UOC:151	2
8	XAOZZ	19207	11652384	TUBE ASSEMBLY,OUTER PART OF 11652399 UOC:151	1
9	XAOZZ	19207	11652386	TUBE ASSEMBLY,INNER PART OF 11652399 UOC:151	1

END OF FIGURE

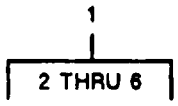

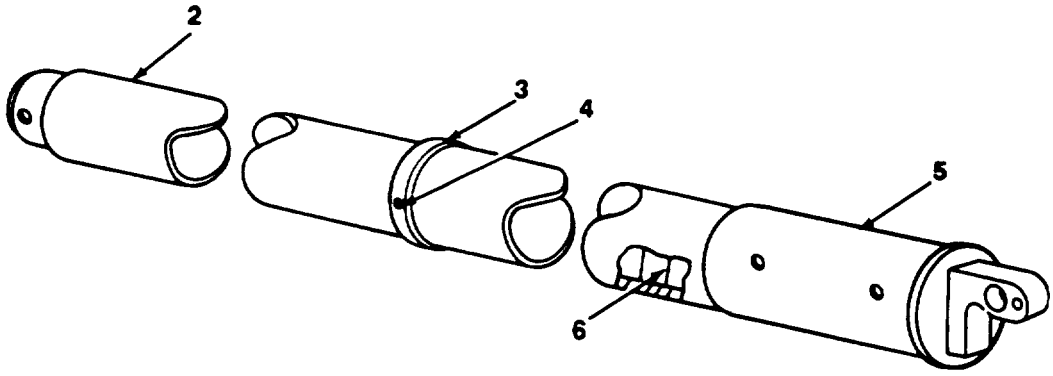

FIGURE 30. POSITIONING LEVER (M832).

(1) ITEM NO	(2) SMR CODE	(3) CAGEC	(4) PART NUMBER	(5) DESCRIPTION AND USABLE ON CODES (UOC)	(6) QTY
				GROUP 1503 PINTLES AND TOWING ATTACHMENTS FIG.30 POSITIONING LEVER (M832)	
1	PAOZZ	19207	12250245	LEVER,POSITIONING,R EXCEPT SN J089-001 THRU 159 & J017-160 THRU 350 UOC:C12	1
2	XAOZZ	19207	11649090	TUBE,INNER PART OF 12250245 UOC:C12	1
3	XAOZZ	19207	12250230	CAP PART OF 12250245 UOC:C12	1
4	PAOZZ	96906	MS51964-124	SETSCREW PART OF 12250245 UOC:C12	1
5	XAOZZ	19207	12250119	TUBE,OUTER PART OF 12250245 UOC:C12	1
6	XAOZZ	19207	11682374	GUIDE PART OF 12250245 UOC:C12	1

END OF FIGURE

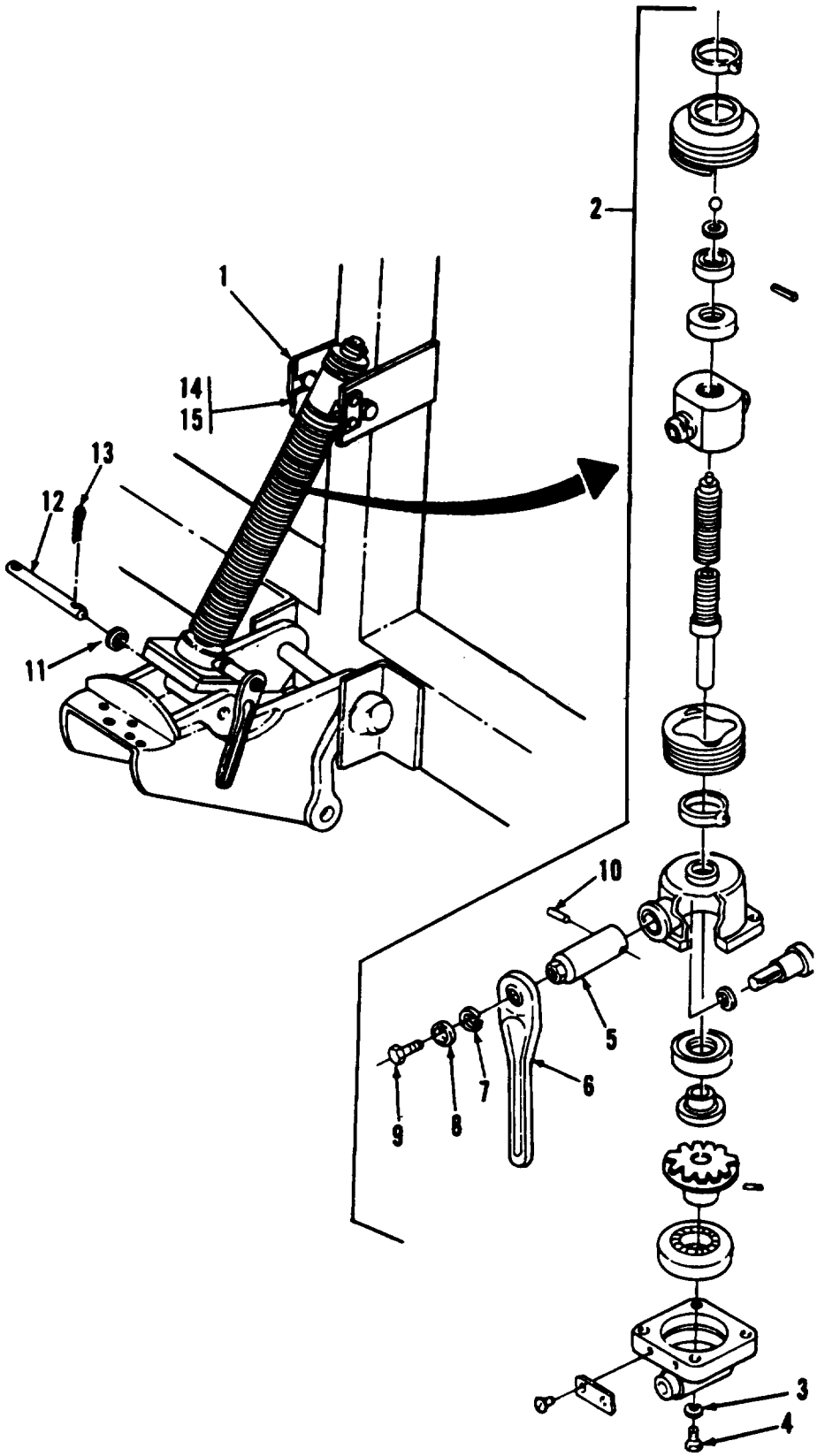

FIGURE 31. LIFTING-LEVELING JACK ASSEMBLY (M689).

(1) ITEM NO	(2) SMR CODE	(3) CAGEC	(4) PART NUMBER	(5) DESCRIPTION AND USABLE ON CODES (UOC)	(6) QTY
				GROUP 1507 LANDING GEAR, LEVELING JACKS FIG.31 LIFTING-LEVELING JACK ASSEMBLY (M689)	
1	PAOZZ	19207	10947381	JACK,LEVELING-SUPPO UOC:265	2
2	XBOZZ	19207	11588336	RETAINER UOC:265	2
3	PAOZZ	96906	MS35338-139	WASHER,LOCK UOC:265	4
4	PAOZZ	96906	MS90725-6	SCREW,CAP,HEXAGON H UOC:265	4
5	PAOZZ	96906	MS16562-17	.PIN,SPRING UOC:265	1
6	XAOZZ	52793	18151	.EXTENSION,LEVELING UOC:265	1
7	PAOZZ	19207	10948145	.WRENCH,RATCHET UOC:265	1
8	PAOZZ	96906	MS27183-15	.WASHER,FLAT UOC:265	1
9	PAOZZ	81718	H2525M	.WASHER,LOCK UOC:265	1
10	PAOZZ	80204	B1821BH038C063N	.SCREW,CAP,HEXAGON H UOC:265	1
11	PAOZZ	96906	MS27183-24	WASHER,FLAT UOC:265	2
12	XBOZZ	19207	11588263	PIN,STRAIGHT,HEADLE UOC:265	1
13	PAOZZ	96906	MS24665-355	PIN,COTTER UOC:265	2

END OF FIGURE

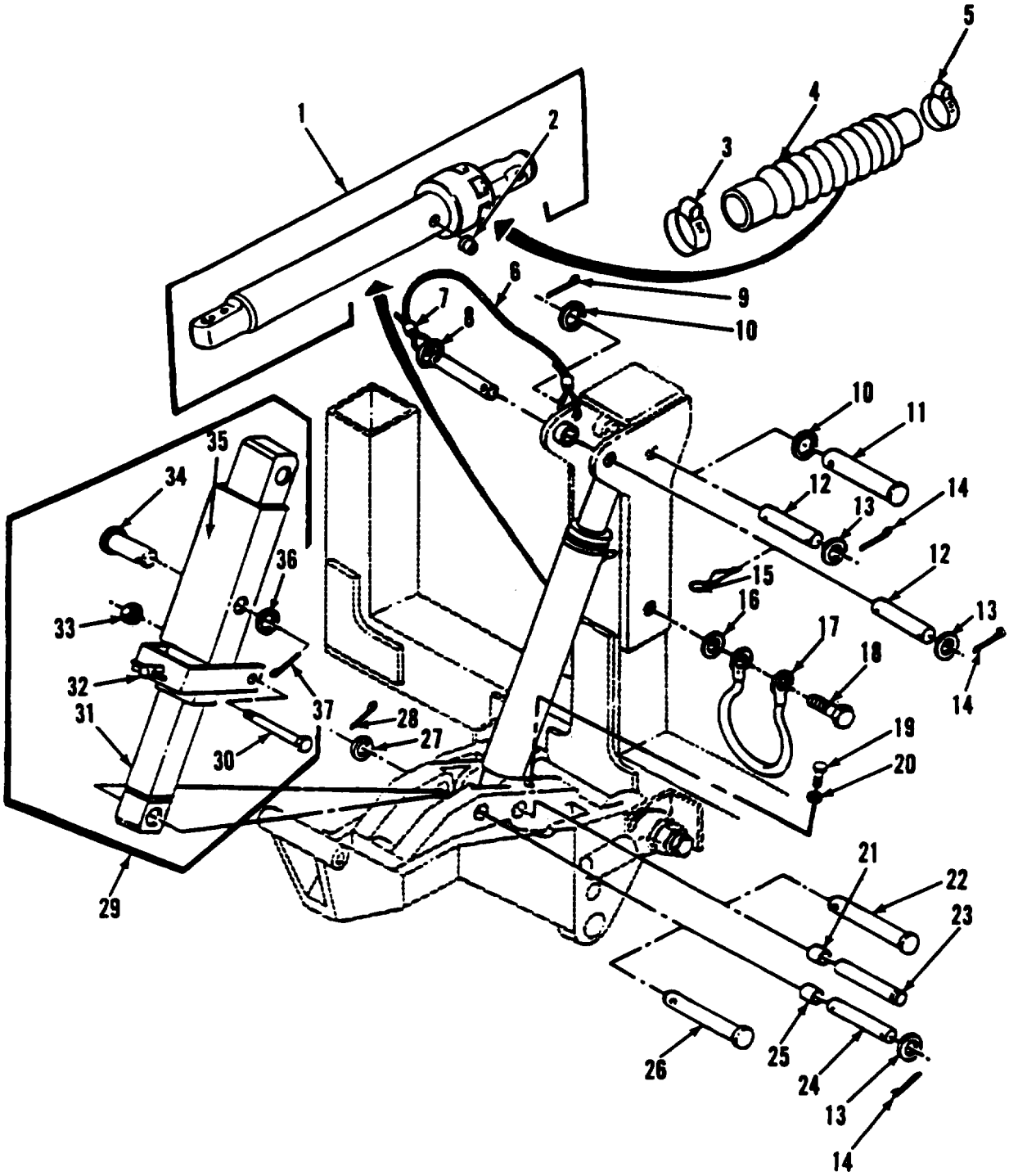

FIGURE 32. LIFTING-LEVELING JACK ASSEMBLY (M832, M840).

(1) ITEM NO	(2) SMR CODE	(3) CAGEC	(4) PART NUMBER	(5) DESCRIPTION AND USABLE ON CODES (UOC)	(6) QTY
				GROUP 1507 LANDING GEAR, LEVELING JACKS FIG.32 LIFTING-LEVELING JACK ASSEMBLY (M832, M840)	
1	PAOZH	19207	11652335	CYLINDER ASSEMBLY,A UOC:151	4
1	PAOZZ	19207	12250222	CYLINDER,ACTUATING UOC:C12	4
2	PAOZZ	24835	B3373-31	.VALVE,AIR VENT UOC:151	1
2	PAOZZ	15434	C0505027400	.PLUG UOC:C12	1
3	PAOZZ	96906	MS35842-15	CLAMP,HOSE SN J089-001 THRU 159 & J017-160 THRU 350 UOC:C12	4
4	PFOZZ	19207	12440397	BOOT SN J089-001 THRU 159 & J017-160 THRU 350 UOC:C12	4
5	PAOZZ	96906	MS35842-13	CLAMP,HOSE SN J089-001 THRU 159 & J017-160 THRU 350 UOC:C12	8
6	PAOZZ	81349	M83420/3-004	ROPE,WIRE UOC:151	4
7	PAOZZ	81337	5-4-4783	SWAGING SLEEVE,WIRE UOC:151	8
8	PAOZZ	19207	11652443	PIN,STRAIGHT,HEADLE UOC:151	4
9	PAOZZ	96906	MS9245-68	PIN,COTTER UOC:151	4
10	PAOZZ	96906	MS27183-27	WASHER,FLAT UOC:151	2
11	PAOZZ	19207	11602350-3	PIN,STRAIGHT,HEADED UOC:151	2
12	PAOZZ	19207	11649131	PIN,STRAIGHT,HEADLE UOC:C12	4
13	PAOZZ	96906	MS27183-27	WASHER,FLAT UOC:C12,265	12
14	PAOZZ	96906	MS24665-355	PIN,COTTER UOC:C12,265	16
15	PAOZZ	19207	11602356-1	PIN,LOCK UOC:151	2
16	PAOZZ	96906	MS27183-12	WASHER,FLAT UOC:C12	2
17	PAOZZ	19207	11649130-2	WIRE ROPE ASSEMBLY UOC:C12	2
18	PAOZZ	96906	MS90725-31	BOLT,MACHINE UOC:C12	2
19	PAOZZ	96906	MS35206-283	SCREW,MACHINE UOC:C12	2
20	PAOZZ	96906	MS35338-44	WASHER,LOCK UOC:C12	2

(1) ITEM NO	(2) SMR CODE	(3) CAGEC	(4) PART NUMBER	(5) DESCRIPTION AND USABLE ON CODES (UOC)	(6) QTY
21	PAOZZ	19207	11647952	BUSHING,SLEEVE UOC:151	4
22	PAOZZ	19207	11652389-2	PIN,STRAIGHT,HEADED UOC:151	1
23	PAOZZ	19207	11649097	PIN,GROOVED,HEADLES UOC:C12	2
24	PAOZZ	19207	11649044	PIN,GROOVED,HEADLES UOC:C12	2
25	PAOZZ	96906	MS17795-135	BEARING,SLEEVE UOC:C12	8
26	PAOZZ	19207	11652389-1	PIN,STRAIGHT,HEADED UOC:151	2
27	PAOZZ	96906	MS27183-23	WASHER,FLAT UOC:151	6
28	PAOZZ	96906	MS9245-65	PIN,COTTER UOC:151	2
29	PAOZF	19207	11649045	LEG,SEMITRAILER RET UOC:C12	4
29	PAOZZ	19207	11652398	LEG,SEMITRAILER RET UOC:151	4
30	PAOZZ	80204	B1821BH038F350N	.SCREW,CAP,HEXAGON H UOC:C12,151	1
31	XAOZZ	19207	11652378	.TUBE,STRUCTURE UOC:151	1
31	XAOZZ	19207	11649035	.TUBE,STRUCTURE UOC:C12	1
32	PAOZZ	19207	11652381	.BRACKET,DOUBLE ANGL UOC:C12,151	1
33	PAOZZ	96906	MS21044N6	.NUT,SELF-LOCKING,HE UOC:C12,151	1
34	PAOZZ	96906	MS20392-12C73	.PIN,STRAIGHT,HEADED UOC:C12	1
35	XAOZZ	19207	11652377	.TUBE,STRUCTURE UOC:151	1
35	XAOZZ	19207	11649034	.TUBE,STRUCTURE UOC:C12	1
36	PAOZZ	88044	AN960-1616	.WASHER,FLAT UOC:C12,151	1
37	PAOZZ	96906	MS24665-423	.PIN,COTTER UOC:C12,151	1

END OF FIGURE

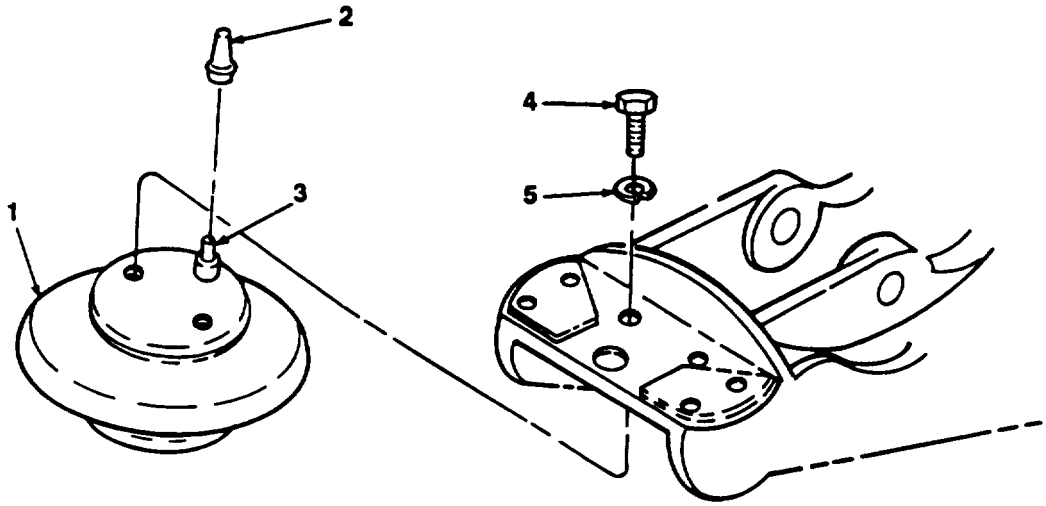

FIGURE 33. AIR SPRING ASSEMBLY.

(1) ITEM NO	(2) SMR CODE	(3) CAGEC	(4) PART NUMBER	(5) DESCRIPTION AND USABLE ON CODES (UOC)	(6) QTY
				GROUP 16 SPRINGS AND SHOCK ABSORBERS	
				GROUP 1601 SPRINGS	
				FIG.33 AIR SPRING ASSEMBLY	
1	PAOZZ	72413	NAD11331-2	AIR SPRING,VEHICULA	4
2	PAOZZ	19207	11601758	VALVE EXTENSION,TIR	4
3	PFOZZ	19207	8376442	VALVE,PNEUMATIC TAN	4
4	PAOZZ	80204	B1821BH038C125N	SCREW,CAP,HEXAGON H	8
5	PAOZZ	81718	H2525M	WASHER,LOCK	8

END OF FIGURE

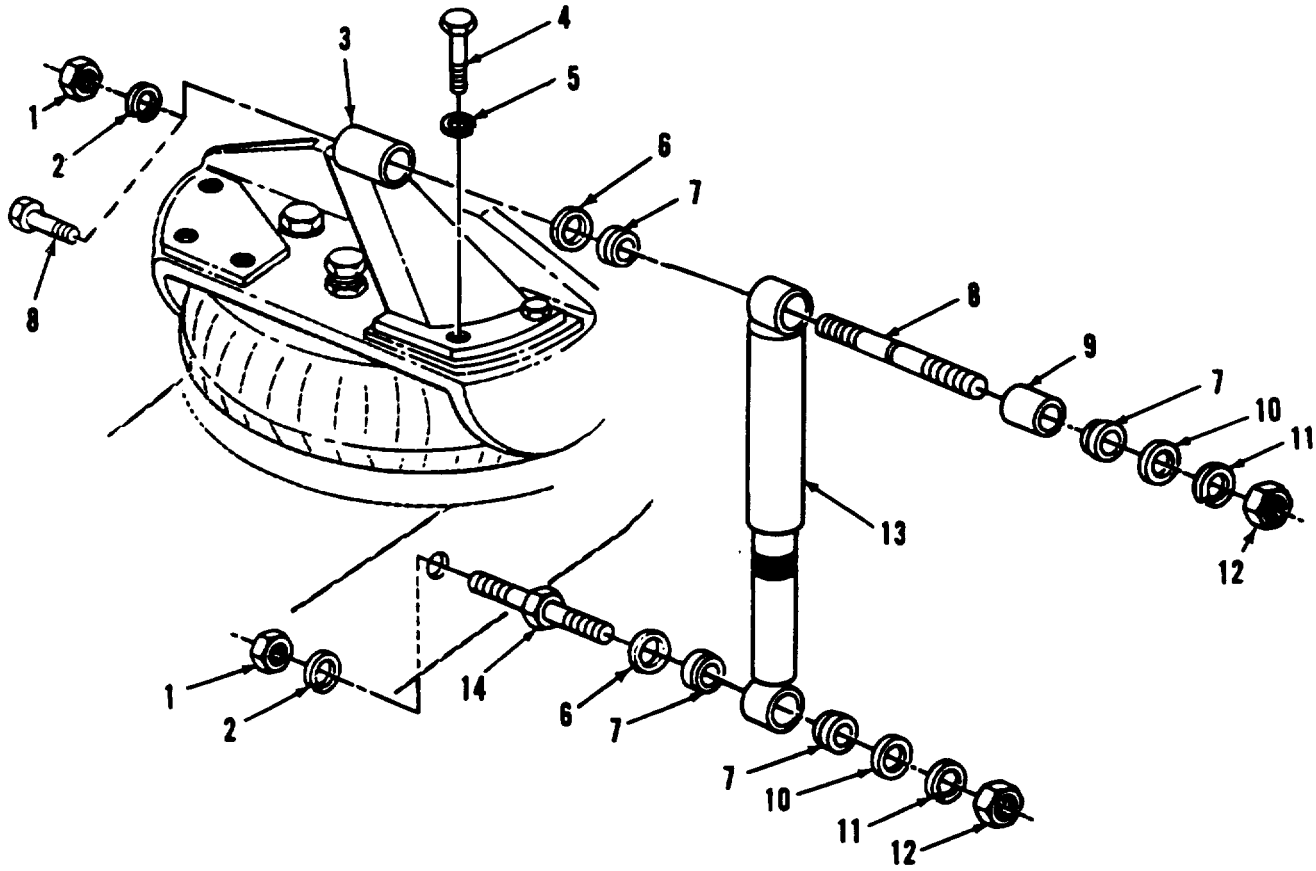

FIGURE 34. SHOCK ABSORBER.

(1) ITEM NO	(2) SMR CODE	(3) CAGEC	(4) PART NUMBER	(5) DESCRIPTION AND USABLE ON CODES (UOC)	(6) QTY
				GROUP 1604 SHOCK ABSORBER EQUIPMENT FIG.34 SHOCK ABSORBER	
1	PAOZZ	96906	MS51967-20	NUT,PLAIN,HEXAGON	4
2	PAOZZ	80045	23MS35338-50	WASHER,LOCK	8
3	PAOZZ	19207	11588281-1	BRACKET,MOUNTING RH REAR, LH FRONT UOC:151,265	2
3	PAOZZ	19207	11588281-2	BRACKET,SHOCK ABSOR LH REAR, RH FRONT UOC:151,265	2
4	PAOZZ	96906	MS35291-061	SCREW,CAP,HEXAGON H UOC:151,265	8
5	PAOZZ	81718	H2525M	WASHER,LOCK UOC:151,265	8
6	PAOZZ	96906	MS27183-21	WASHER,FLAT	4
7	PAFZZ	19207	7339466	BUSHING,NONMETALLIC UOC:C12,151	16
8	PAFZZ	19207	11652456	BOLT,SHOULDER UOC:151	4
8	PFOZZ	19207	11649046	STUD,SHOULDERED UOC:C12	4
8	PAOZZ	19207	11588264	STUD,SHOULDERED AND UOC:151,265	4
9	XBOZZ	19207	11652457	SLEEVE,SHOCK ABSORB UOC:151	4
10	PAOZZ	96906	MS27183-19	WASHER,FLAT	8
11	PAOZZ	96906	MS35338-48	WASHER,LOCK	8
12	PAOZZ	96906	MS51968-14	NUT,PLAIN,HEXAGON	8
13	PAOZZ	19207	10947382	SHOCK ABSORBER,DIRE	4
14	PAFZZ	19207	11588262-1	STUD,SHOULDERED AND	4

END OF FIGURE

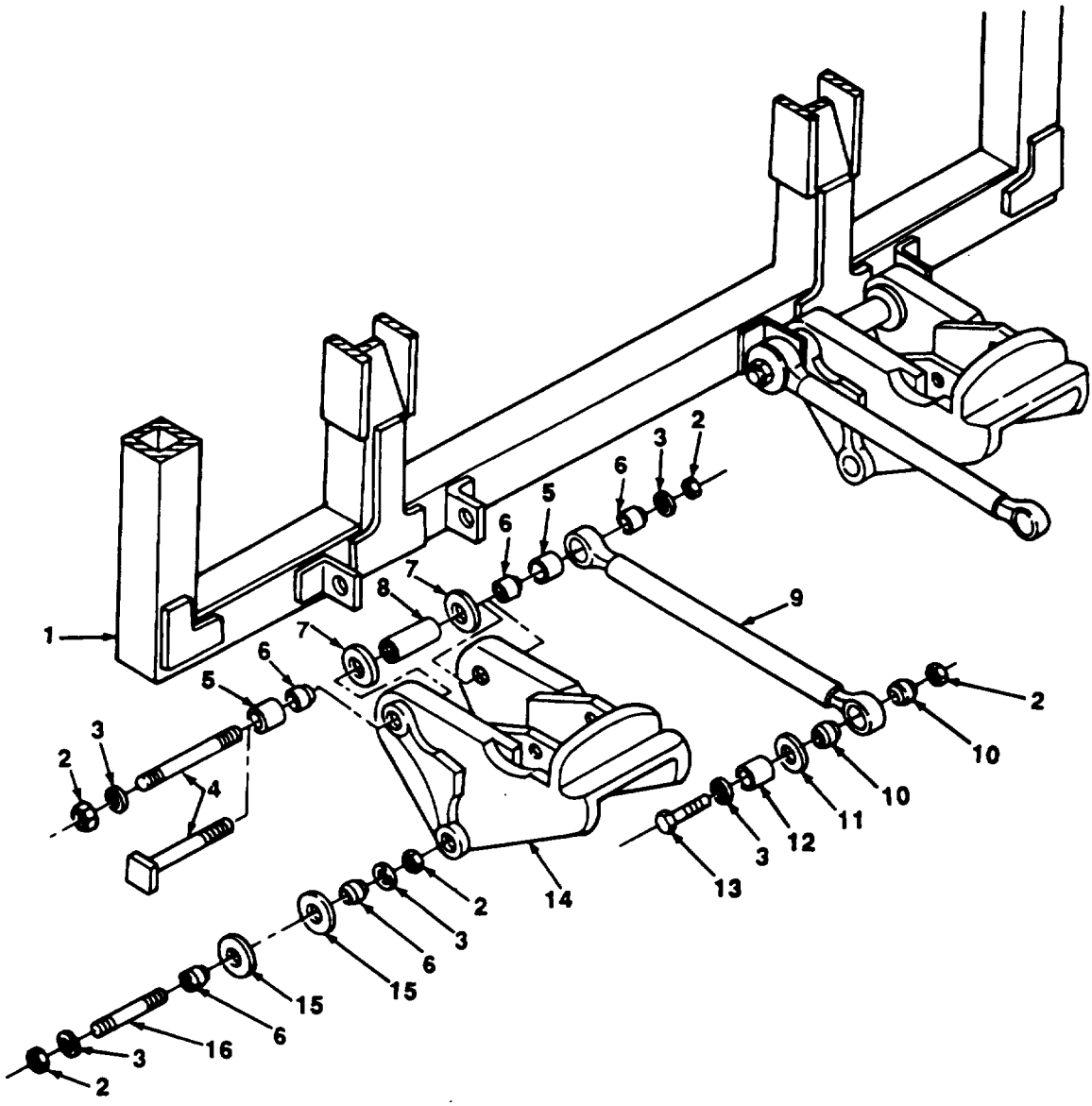

FIGURE 35. REAR SUSPENSION BAR AND RELATED PARTS (M689, M840).

(1) ITEM NO	(2) SMR CODE	(3) CAGEC	(4) PART NUMBER	(5) DESCRIPTION AND USABLE ON CODES (UOC)	(6) QTY
				GROUP 1605 TORQUE, RADIUS, AND STABILIZER RODS FIG.35 REAR SUSPENSION BAR AND RELATED PARTS (M6339, M840)	
1	PAOZZ	19207	11652419	TUBE ASSEMBLY,TORQU UOC:151	1
1	PFOZZ	19207	11588291	ARM,CONTROL,VEHICUL UOC:265	1
2	PAOZZ	96906	MS16228-16C	NUT,SELF-LOCKING,HE UOC:151,265	18
2	PAOZZ	96906	MS16228-8C	NUT,SELF-LOCKING,HE UOC:151,265	10
3	PAOZZ	96906	MS27183-27	WASHER,FLAT UOC:151,265	10
4	PAOZZ	19207	11652428-2	BOLT,MACHINE UOC:151	2
4	XBOZZ	19207	11588266-2	ROD,THREADED END UOC:265	2
5	PAOZZ	19207	11652432	BUSHING,SLEEVE UOC:151	4
5	PAOZZ	19207	11588268	BUSHING,SLEEVE UOC:265	4
6	PAOZZ	19207	10947273	MOUNT,RESILIENT UOC:151,265	10
7	PAOZZ	19207	11588358	WASHER,FLAT UOC:151,265	4
8	MOOZZ	19207	11588267	TUBE,SPACER MAKE FROM PIN M25995B3FC020, 7.65 INCHES LONG UOC:151,265	2
9	PAOZZ	19207	11588303	ROD,ALIGNING,VEHICU UOC:151,265	2
10	PAOZZ	19207	7409618	BUSHING,NONMETALLIC UOC:151,265	2
11	PAOZZ	96906	MS27183-28	WASHER,FLAT UOC:151,265	2
12	PAOZZ	19207	11588307	SPACER,SLEEVE UOC:151,265	2
13	PAOZZ	80204	B1821BH100C450N	SCREW,CAP,HEXAGON H UOC:151,265	2
14	XBOZZ	19207	11588283-3	BRACKET,MOUNTING LEFT HAND, REAR UOC:265	1
14	PAOZZ	19207	11652445	BRACKET,MOUNTING UOC:151	2
14	PAOZZ	19207	11588283-2	BRACKET,MOUNTING RIGHT HAND, REAR UOC:265	1
15	PAOZZ	19207	11588269	WASHER,FLAT UOC:151,265	4
16	PAOZZ	19207	11588265	ROD,THREADED END UOC:151,265	2
				END OF FIGURE	

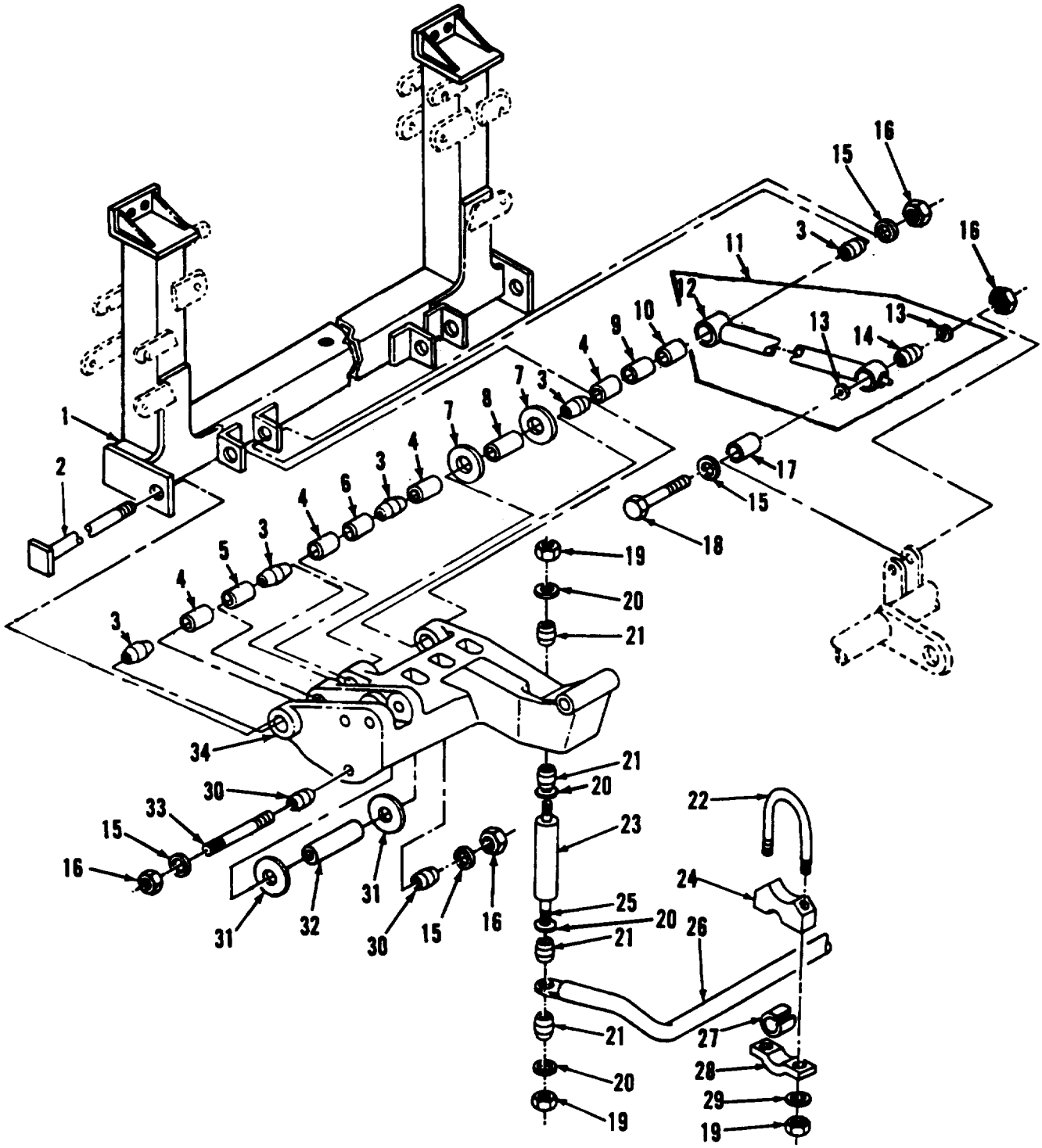

FIGURE 36. REAR SUSPENSION BAR AND RELATED PARTS (M832) (SHEET 1 OF 2).

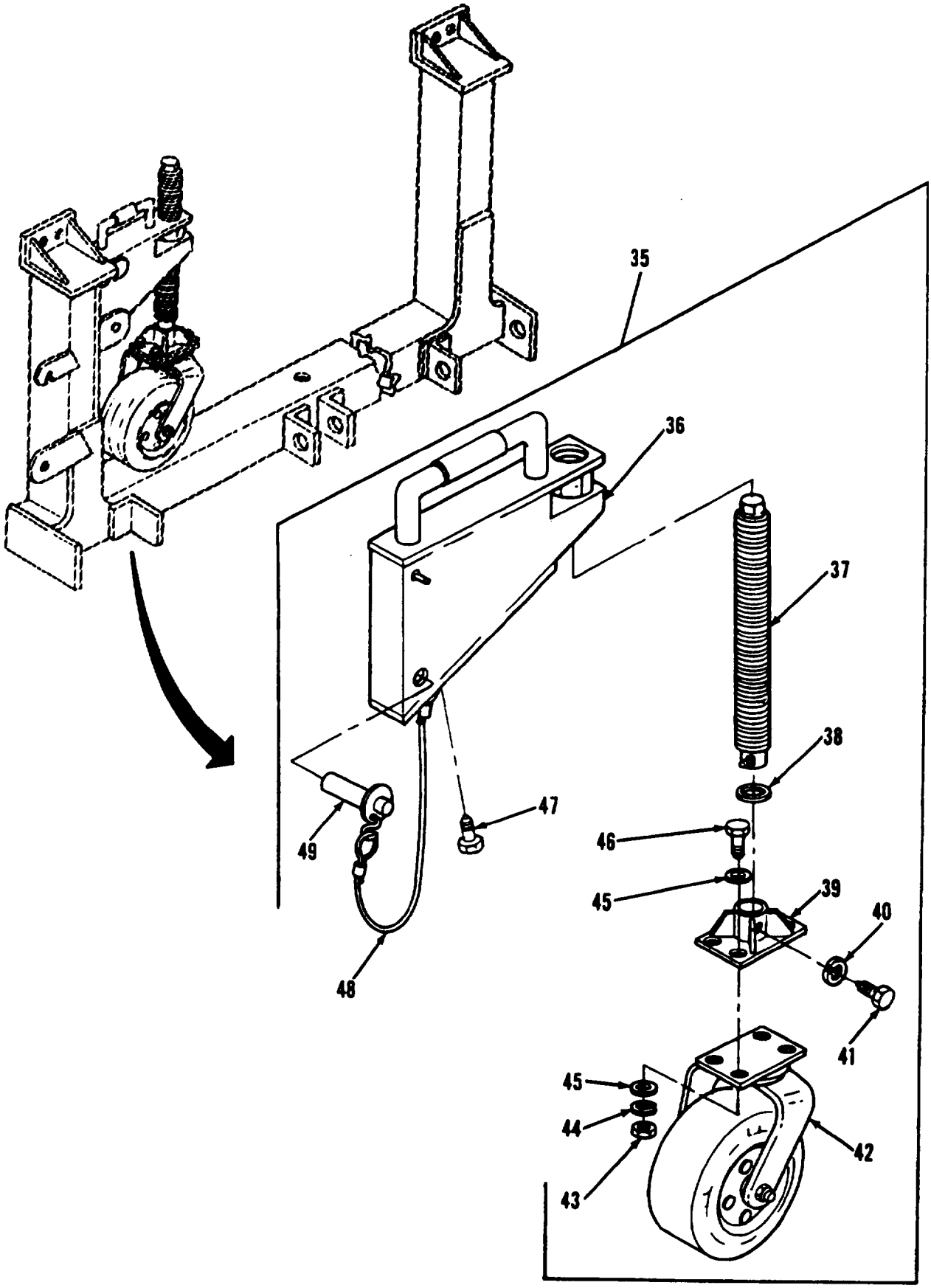

FIGURE 36. REAR SUSPENSION BAR AND RELATED PARTS (M832) (SHEET 2 OF 2).

(1) ITEM NO	(2) SMR CODE	(3) CAGEC	(4) PART NUMBER	(5) DESCRIPTION AND USABLE ON CODES (UOC)	(6) QTY
				GROUP 1605 TORQUE, RADIUS, AND STABILIZER RODS FIG.36 REAR SUSPENSION BAR AND RELATED PARTS (M832)	
1	PBOZZ	19207	11649039	BAR,SUSPENSION,SHEL UOC:C12	1
2	PAOZZ	19207	11649036	BOLT,MACHINE UOC:C12	2
3	PAOZZ	19207	10947273	MOUNT,RESILIENT UOC:C12	12
4	PAOZZ	19207	11647952	BUSHING,SLEEVE UOC:C12	4
5	MOOZZ	19207	11649042-2	SPACER,TUBE MAKE FROM PN M25995B3FC020, 2 5/16 INCHES LONG UOC:C12	2
6	MOOZZ	19207	11649042-5	SPACER,TUBE MAKE FROM PN M25995B3FC020, 1 5/16 INCHES LONG UOC:C12	2
7	PAOZZ	19207	11588358	WASHER,FLAT UOC:C12	4
8	MOOZZ	19207	11649042-3	SPACER,TUBE MAKE FROM PN M25995B3FC020, 7 1/8 INCHES LONG UOC:C12	2
9	MOOZZ	19207	11649042-1	SPACER,TUBE MAKE FROM PN M25995B3FC020, 2 3/4 INCHES LONG UOC:C12	2
10	PAOZZ	19207	11588307	SPACER,SLEEVE UOC:C12	2
11	PAOZZ	19207	12312955	ROD,ALIGNING,VEHICU UOC:C12	2
12	PAFZZ	19207	12312968	.STABILIZER,REAR UOC:C12	1
13	PAOZZ	96906	MS16625-1162	.RING,RETAINING UOC:C12	2
14	PAOZZ	60380	10SF16-TT	.BEARING,PLAIN,SELF- UOC:C12	8
15	PAOZZ	96906	MS27183-27	WASHER,FLAT UOC:C12,265	8
16	PAOZZ	96906	MS16228-16C	NUT,SELF-LOCKING,HE UOC:C12	4
17	PAOZZ	19207	12312956-1	BUSHING,SLEEVE UOC:C12	2
18	PAOZZ	19207	11649072	SETSCREW UOC:C12	2
19	PAOZZ	96906	MS21044-N8	NUT,SELF-LOCKING,HE UOC:C12	8
20	PAOZZ	19207	12259398	WASHER,SPRING TENSI UOC:C12	8
21	PAOZZ	19207	12259397	BUSHING,NONMETALLIC UOC:C12	8
22	PAOZZ	19207	12259624	BOLT,U	2

(1) ITEM NO	(2) SMR CODE	(3) CAGEC	(4) PART NUMBER	(5) DESCRIPTION AND USABLE ON CODES (UOC)	(6) QTY
				UOC:C12	
23	XBOZZ	19207	12259512-2	COUPLING,TUBE UOC:C12	2
24	XBOZZ	19207	12259625	BASE CLAMP,STABILIZ UOC:C12	2
25	XBOZZ	19207	12259399-1	ROD,THREADED END UOC:C12	2
26	PAOZZ	19207	12259403	BAR,STABILIZER,REAR UOC:C12	2
27	PAOZZ	19207	12259402-1	BUSHING,NONMETALLIC UOC:C12	2
28	PAOZZ	19207	12259404	BRACKET,MOUNTING UOC:C12	2
29	PAOZZ	96906	MS35338-48	WASHER,LOCK UOC:C12	2
30	PAOZZ	96906	MS17795-135	BEARING,SLEEVE UOC:C12	4
31	PAOZZ	19207	11588269	WASHER,FLAT UOC:C12	4
32	MOOZZ	19207	11649042-4	SPACER,TUBE MAKE FROM PN M25995B3FC020, 5 1/8 INCHES LONG UOC:C12	2
33	XBOZZ	19207	11588265	ROD,THREADED END UOC:C12	2
34	PAOZZ	19207	11649081-3	BRACKET,MOUNTING ROADSIDE UOC:C12	1
34	PAOZZ	19207	11649081-4	BRACKET,MOUNTING CURBSIDE UOC:C12	1
35	AOOOO	19207	12436720-2	CASTER,ASSY,DOLLY SN J089-001 THRU 159 & J017-160 THRU 350 UOC:C12	2
36	PFOZZ	19207	12436724	.BRACKET,DOLLY SN J089-001 THRU 159 & J017-160 THRU 350 UOC:C12	1
37	PFOZZ	19207	12436731	.BEARING INSERT,CAST SN J089-001 THRU 159 & J017-160 THRU 350 UOC:C12	1
38	PAOZZ	96906	MS29513-121	.PACKING,PREFORMED SN J089-001 THRU 159 & J017-160 THRU 350 UOC:C12	1
39	PFOZZ	19207	12436730	.CASTER, MOUNTING AS SN J089-001 THRU 159 & J017-160 THRU 350 UOC:C12	1
40	PAOZZ	96906	MS35338-44	.WASHER,LOCK SN J089-001 THRU 159 & J017-160 THRU 350 UOC:C12	1
41	PFOZZ	19207	12436733	.SCREW,DOGPOINT SN J089-001 THRU 159 & J017-160 THRU 350 UOC:C12	2
42	PAOZZ	16128	4960205	.CASTER,SWIVEL SN J089-001 THRU 159 & J017-160 THRU 350 UOC:C12	1

(1) ITEM NO	(2) SMR CODE	(3) CAGEC	(4) PART NUMBER	(5) DESCRIPTION AND USABLE ON CODES (UOC)	(6) QTY
43	PAOZZ	96906	MS15968-15	.NUT,PLAIN HEX SN J089-001 THRU 159 & J017-160 THRU 350 UOC:C12	4
44	PAOZZ	96906	MS35338-48	.WASHER, LOCK SN J089-001 THRU 159 & J017-160 THRU 350 UOC:C12	4
45	PAOZZ	96906	MS27183-18	.WASHER,FLAT SN J089-001 THRU 159 & J017-160 THRU 350 UOC:C12	8
46	PAOZZ	80204	B1821BH050F175N	.SCREW,CAP,HEXAGON H SN J089-001 THRU 159 & J017-160 THRU 350 UOC:C12	4
47	PAOZZ	96906	MS21318-35	.SCREW,DRIVE SN J089-001 THRU 159 & J017-160 THRU 350 UOC:C12	1
48	PAOZZ	19207	10947252	.WIRE ROPE ASSEMBLY, SN J089-001 THRU 159 & J017-160 THRU 350	1
49	PAOZZ	96906	MS17990C1248	.PIN, RETAINING SN J089-001 THRU 159 & J017-160 THRU 350 UOC:C12	1

END OF FIGURE

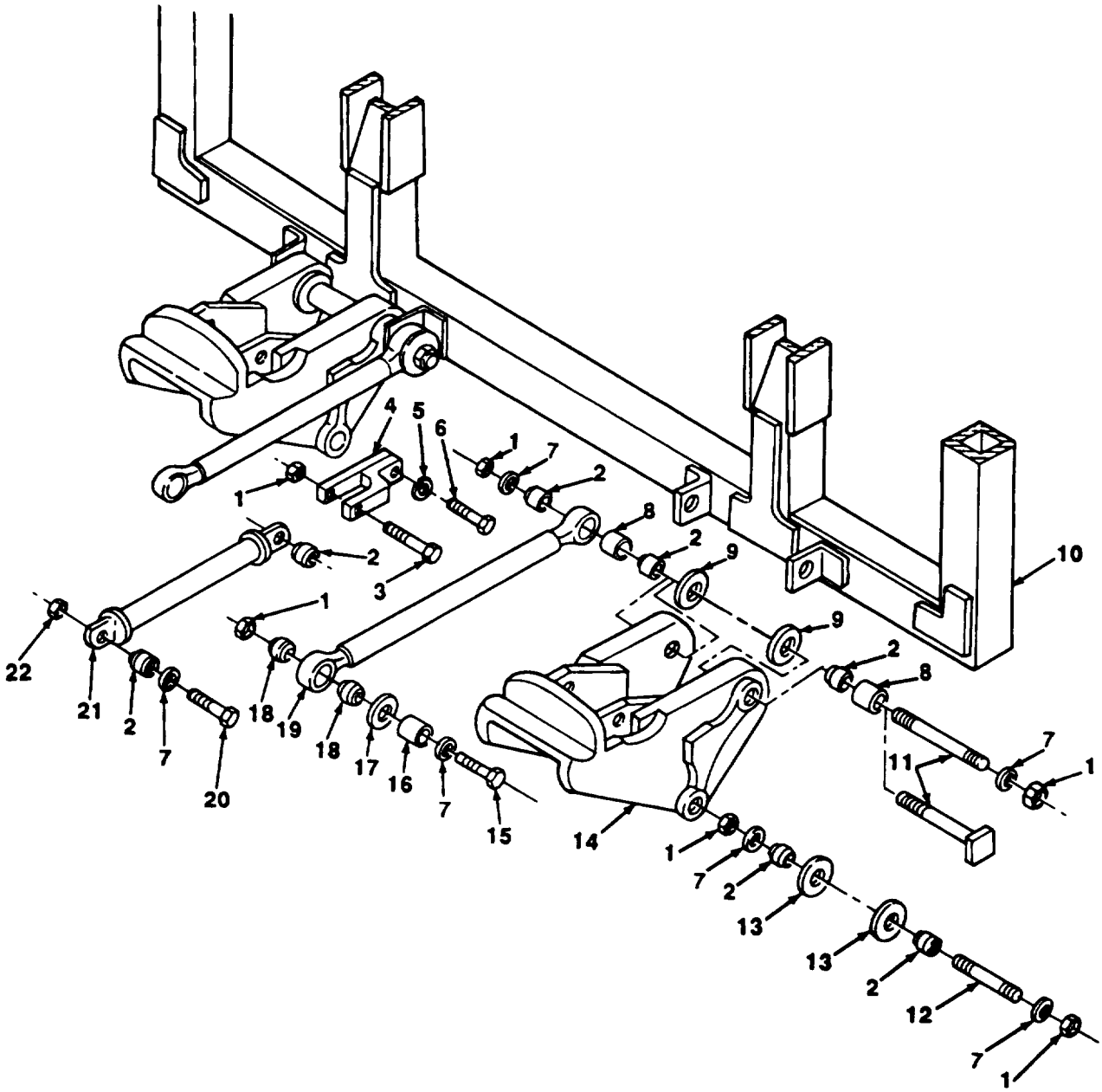

FIGURE 37. FRONT SUSPENSION BAR AND RELATED PARTS (M689, M840).

(1) ITEM NO	(2) SMR CODE	(3) CAGEC	(4) PART NUMBER	(5) DESCRIPTION AND USABLE ON CODES (UOC)	(6) QTY
				GROUP 1605 TORQUE, RADIUS, AND STABILIZER RODS FIG.37 FRONT SUSPENSION BAR AND RELATED PARTS (M689, M840)	
1	PAOZZ	96906	MS16228-16C	NUT,SELF-LOCKING,HE UOC:151,265	11
2	PAOZZ	19207	10947273	MOUNT,RESILIENT UOC:151	12
3	PAOZZ	96906	MS90725-236	SCREW,CAP,HEXAGON H UOC:151,265	1
4	PAOZZ	19207	11588261	BRACKET,MOUNTING UOC:151,265	1
5	PAOZZ	96906	MS35338-48	WASHER,LOCK UOC:151,265	3
6	PAOZZ	80204	B1821BH050C150N	SCREW,CAP,HEXAGON H UOC:151,265	3
7	PAOZZ	96906	MS27183-27	WASHER,FLAT UOC:151,265	11
8	PAOZZ	19207	11647952	BUSHING,SLEEVE UOC:151	4
8	PAOZZ	19207	11588268	BUSHING,SLEEVE UOC:265	4
9	PAOZZ	19207	11588358	WASHER,FLAT UOC:151,265	4
10	PAOZZ	19207	11652418	TUBE ASSEMBLY,TORQU UOC:151	1
10	XBOZZ	19207	11588275	BAR,SUSPENSION,FRON UOC:265	1
11	PAOZZ	19207	11652428-1	BOLT,MACHINE UOC:151	2
11	PFOZZ	81902	24482P1	ROD,THREADED END UOC:C12,265	2
12	PAOZZ	19207	11588265	ROD,THREADED END UOC:151,265	2
13	PAOZZ	19207	11588269	WASHER,FLAT UOC:151,265	2
14	XBOZZ	19207	11588283-1	BRACKET,MOUNTING UOC:265	1
14	PAOZZ	19207	11588283-2	BRACKET,MOUNTING UOC:265	1
14	PAOZZ	19207	11652445	BRACKET,MOUNTING UOC:151	2
15	PAOZZ	96906	MS90725-242	SCREW,CAP,HEXAGON H UOC:151,265	2
16	PAOZZ	19207	11588307	SPACER,SLEEVE UOC:151,265	2
17	PAOZZ	96906	MS27183-28	WASHER,FLAT UOC:151,265	2
18	PAOZZ	19207	7409618	BUSHING,NONMETALLIC UOC:151,265	4
19	PAOZZ	19207	11588306	ROD,ALIGNING,VEHICU	2

(1) ITEM NO	(2) SMR CODE	(3) CAGEC	(4) PART NUMBER	(5) DESCRIPTION AND USABLE ON CODES (UOC)	(6) QTY
				UOC:151,265	
20	PAOZZ	19207	11588326	BOLT,SHOULDER	1
				UOC:151,265	
21	PBOZZ	19207	11588277	CONNECTING LINK,RIG	1
				UOC:151,265	
22	PAOZZ	96906	MS17829-12F	NUT,SELF-LOCKING,HE	1
				UOC:151,265	
				END OF FIGURE	

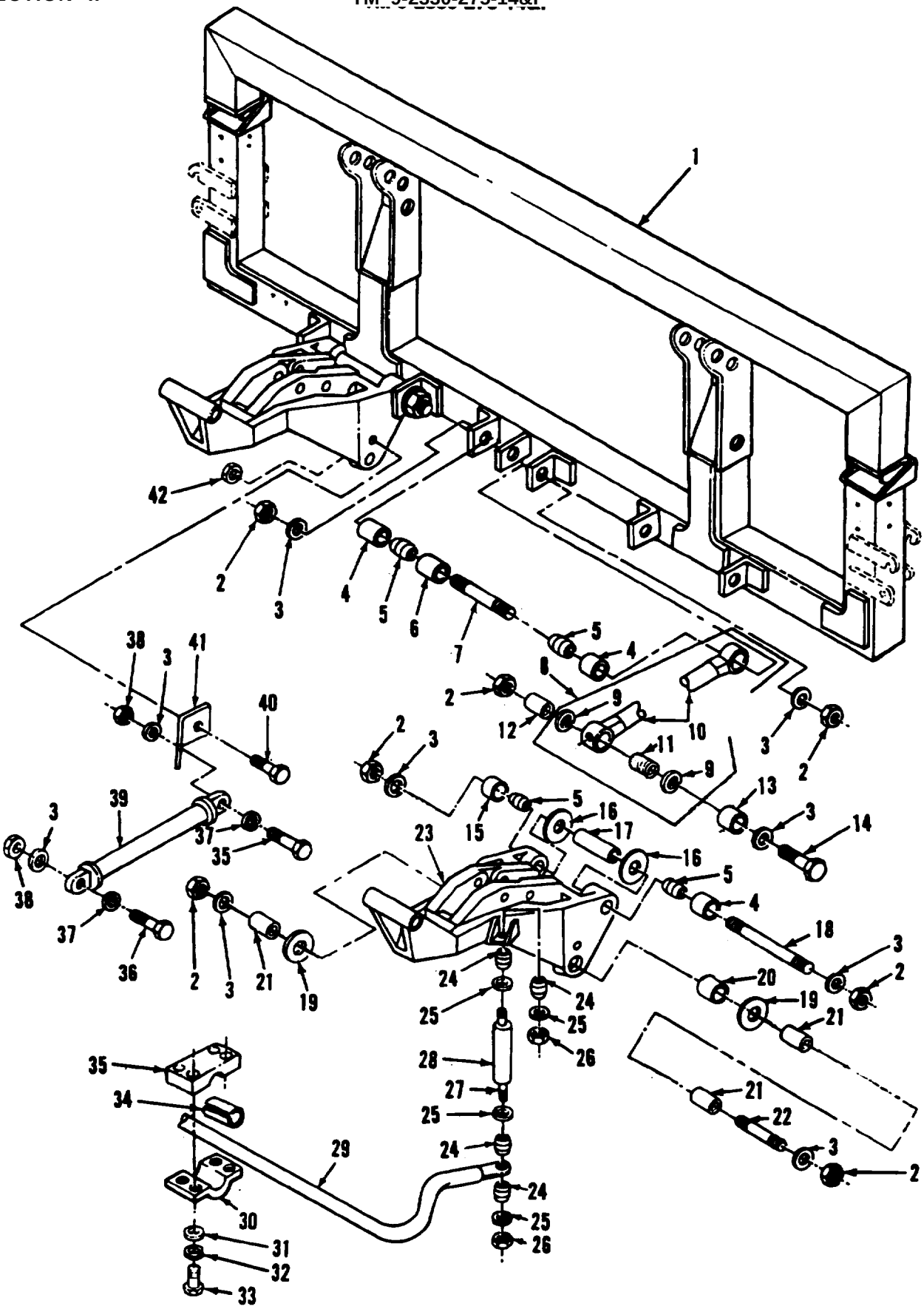

FIGURE 38. FRONT SUSPENSION BAR AND RELATED PARTS (M832).

(1) ITEM NO	(2) SMR CODE	(3) CAGEC	(4) PART NUMBER	(5) DESCRIPTION AND USABLE ON CODES (UOC)	(6) QTY
				GROUP 1605 TORQUE, RADIUS, AND STABILIZER RODS FIG.38 FRONT SUSPENSION BAR AND RELATED PARTS (M832)	
1	PBFZZ	19207	11649056	BAR,SUSPENSION,SHEL UOC:C12	1
2	PAOZZ	96906	MS16228-16C	NUT,SELF-LOCKING,HE UOC:C12	12
3	PAOZZ	96906	MS27183-27	WASHER,FLAT UOC:C12	14
4	PAOZZ	19207	11647952	BUSHING,SLEEVE UOC:C12	2
5	PAOZZ	19207	10947273	MOUNT,RESILIENT UOC:C12	10
6	MOOZZ	19207	11647952-2	BUSHING,SLEEVE MAKE FROM PN 11647952-1, 1/2 INCH LONG UOC:C12	1
7	PAOZZ	19207	11588266-4	STUD,PLAIN UOC:C12	1
8	PAOZZ	19207	12312955	ROD,ALIGNING,VEHICU UOC:C12	2
9	PAOZZ	96906	MS16625-1162	.RING,RETAINING UOC:C12	2
10	PAFZZ	19207	12312968	.STABILIZER,REAR UOC:C12	1
11	PAOZZ	18108	23-7123	.BEARING,PLAIN,SELF- UOC:C12	1
12	PAOZZ	19207	12312956-1	BUSHING,SLEEVE UOC:C12	2
13	PAOZZ	19207	12312956-2	BUSHING,SLEEVE UOC:C12	2
14	PAOZZ	80204	B1821BH100C450N	SCREW,CAP,HEXAGON H UOC:C12	2
15	PFOZZ	19207	11647952-1	BUSHING,SLEEVE UOC:C12	2
16	PAOZZ	19207	11588358	WASHER,FLAT UOC:C12	4
17	MOOZZ	19207	11588267-1	TUBE,SPACER MAKE FROM P/N M2599583FC020, 7 3/16 INCHES LONG UOC:C12	2
18	PAOZZ	19207	11588266-3	ROD,THREADED END UOC:C12	2
19	PAOZZ	19207	11588269	WASHER,FLAT UOC:C12	4
20	MOOZZ	19207	11649042-4	SPACER,TUBE MAKE FROM P/N M2599583FC020,5 1/8 INCH LONG UOC:C12	2
21	PAOZZ	96906	MS17795-135	BEARING,SLEEVE UOC:C12	4
22	PAOZZ	19207	11588265	ROD,THREADED END UOC:C12	2

(1) ITEM NO	(2) SMR CODE	(3) CAGEC	(4) PART NUMBER	(5) DESCRIPTION AND USABLE ON CODES (UOC)	(6) QTY
23	PAOZZ	19207	11649080-3	BRACKET,MOUNTING CURBSIDE UOC:C12	1
23	PAOZZ	19207	11649080-4	BRACKET,MOUNTING ROADSIDE UOC:C12	1
24	PAOZZ	19207	12259397	BUSHING,NONMETALLIC UOC:C12	8
25	PAOZZ	19207	12259398	WASHER,SPRING TENSI UOC:C12	8
26	PAOZZ	96906	MS21044-N8	NUT,SELF-LOCKING,HE UOC:C12	4
27	PAOZZ	19207	12259399-2	ROD,THREADED END UOC:C12	2
28	PAOZZ	19207	12259512-1	TUBE,METALLIC UOC:C12	2
29	PAOZZ	19207	12259405	BAR,STABILIZER,FRON UOC:C12	1
30	PFOZZ	19207	12259406	BRACKET,MOUNTING UOC:C12	2
31	PAOZZ	96906	MS27183-12	WASHER,FLAT UOC:C12	8
32	PAOZZ	96906	MS35338-45	WASHER,LOCK UOC:C12	8
33	PAOZZ	96906	MS51095-324	SCREW,CAP,HEXAGON H UOC:C12	8
34	PAOZZ	19207	12259402-2	BUSHING,NONMETALLIC UOC:C12	2
35	PAOZZ	19207	12259627	STRAP,RETAINING UOC:C12	2
36	PAOZZ	19207	11588326	BOLT,SHOULDER UOC:C12	2
37	PAOZZ	96906	MS27183-23	WASHER,FLAT UOC:C12	2
38	PAOZZ	96906	MS17829-12F	NUT,SELF-LOCKING,HE UOC:C12	2
39	PAOZZ	19207	11649065	STABILIZER BAR,AXLE UOC:C12	1
40	PAOZZ	80204	B1821BH075C225N	SCREW,CAP,HEXAGON H UOC:C12	1
41	PAOZZ	19207	11649094	BRACKET,ANGLE UOC:C12	1
42	PAOZZ	96906	MS17829-12C	NUT,SELF-LOCKING,HE UOC:C12	4

END OF FIGURE

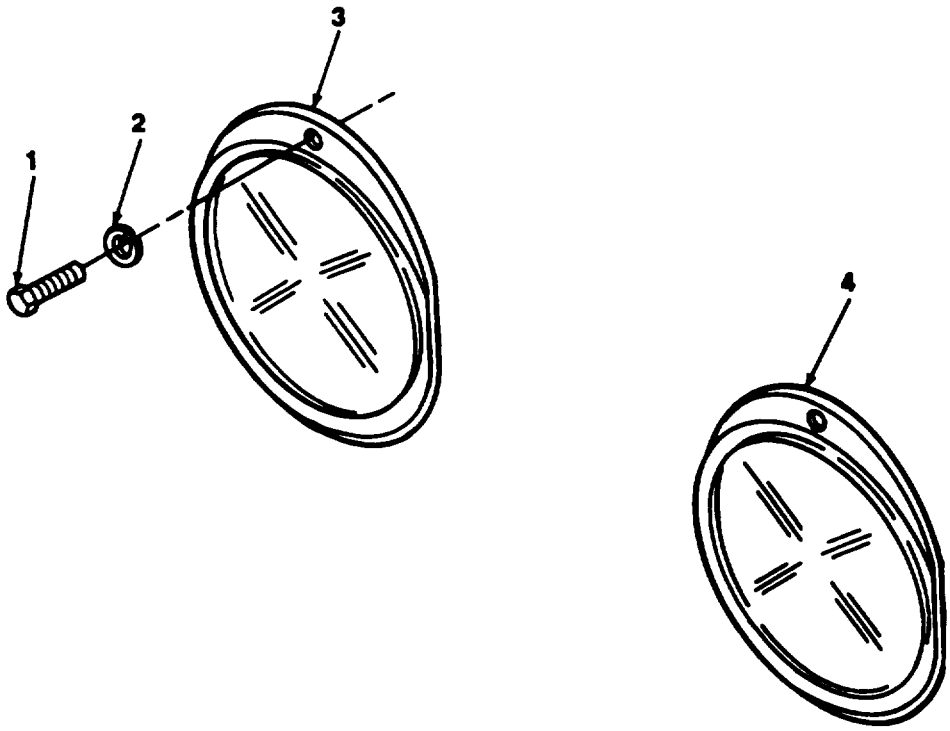

FIGURE 39. REFLECTORS.

(1) ITEM NO	(2) SMR CODE	(3) CAGEC	(4) PART NUMBER	(5) DESCRIPTION AND USABLE ON CODES (UOC)	(6) QTY
				GROUP 22 BODY, CHASSIS, AND HULL	
				ACCESSORY ITEMS	
				GROUP 2202 ACCESSORY ITEMS	
				FIG.39 REFLECTORS	
1	PAOZZ	96906	MS35206-280	SCREW,MACHINE	16
2	PAOZZ	96906	MS35338-139	WASHER,LOCK	16
3	PAOZZ	96906	MS35387-1	REFLECTOR,INDICATIN	4
4	PAOZZ	96906	MS35387-2	REFLECTOR,INDICATIN	4

END OF FIGURE

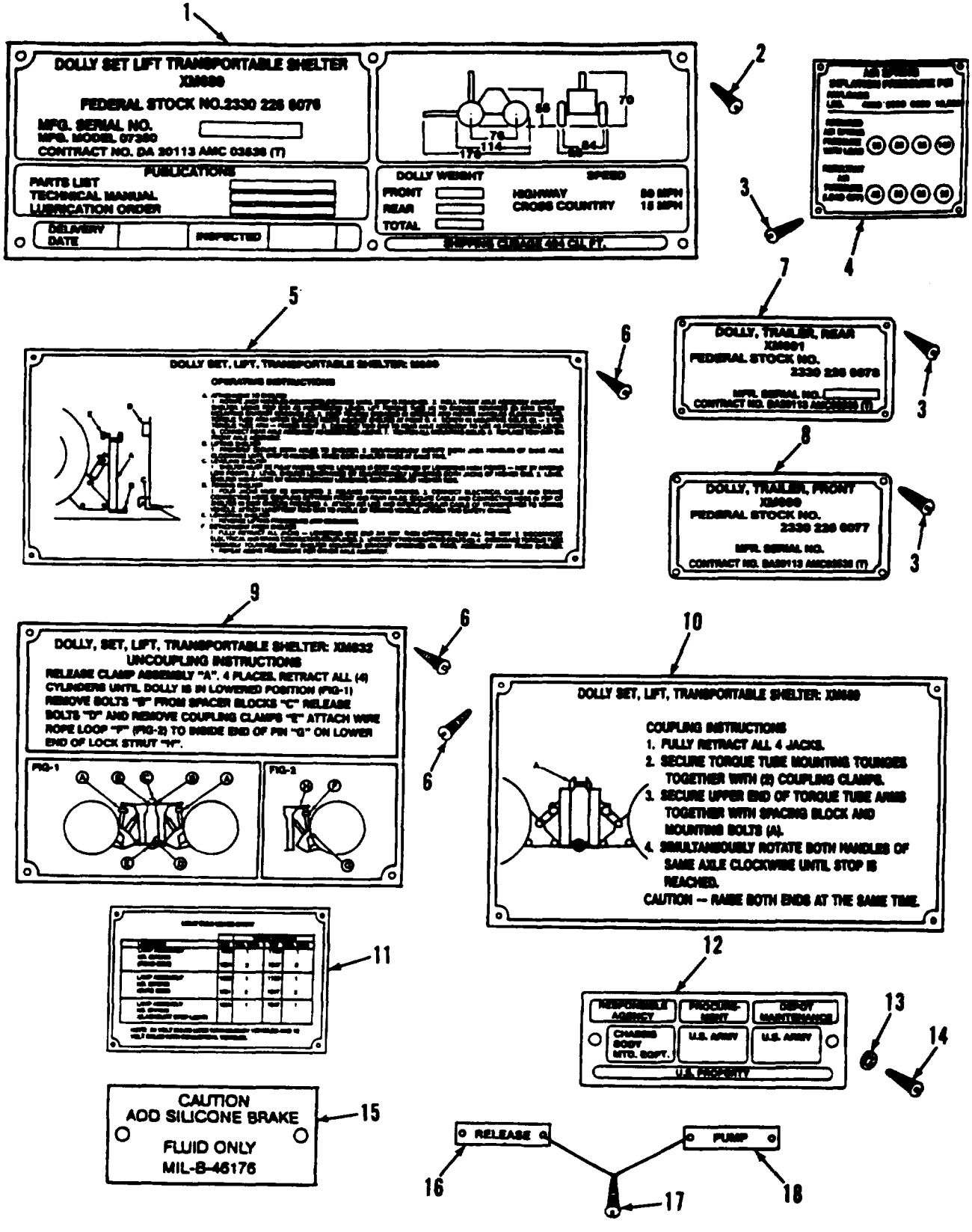

FIGURE 40. DATA PLATES AND INSTRUCTION PLATES (SHEET 1 OF 3),

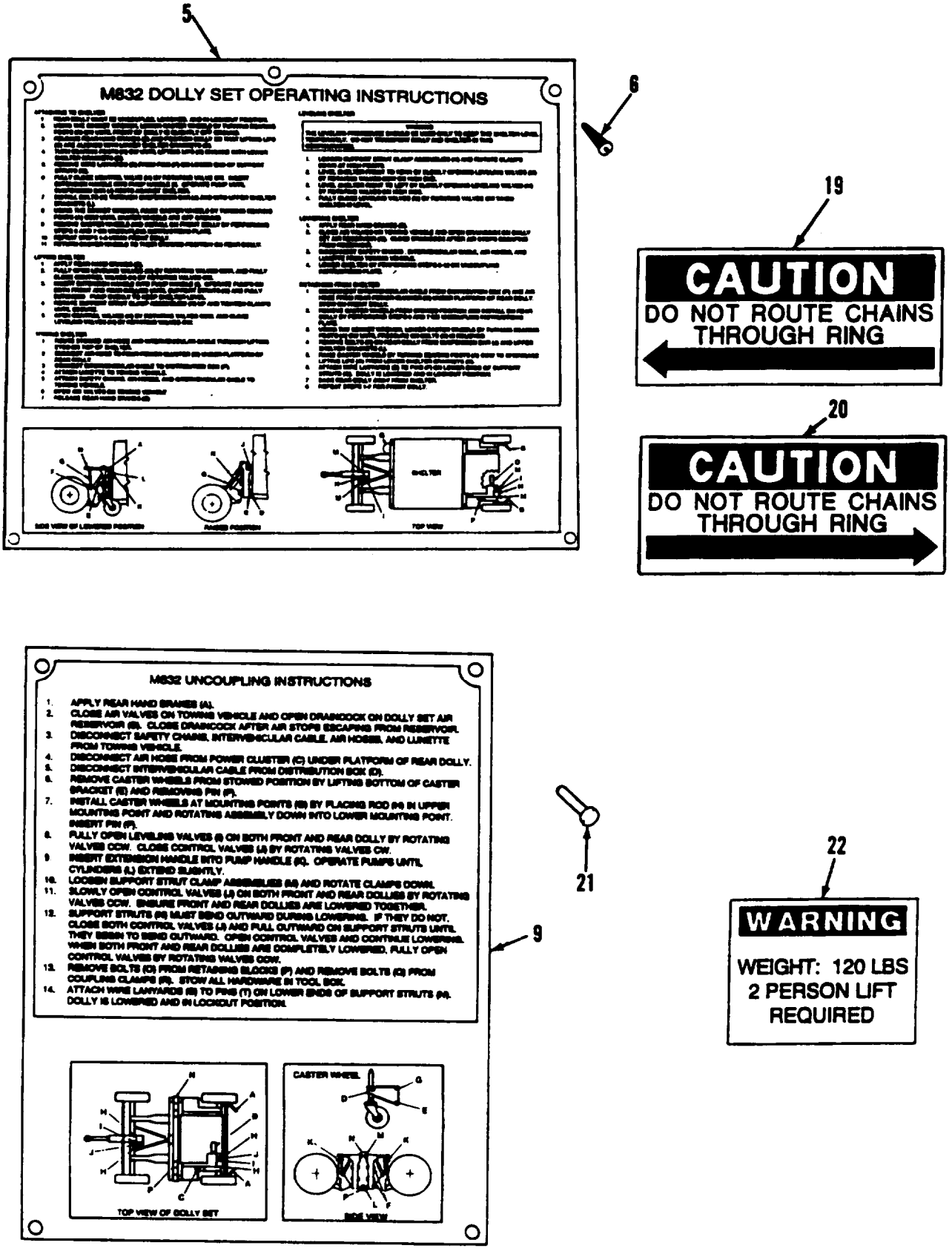

FIGURE 40. DATA PLATES AND INSTRUCTION PLATES (SHEET 2 OF 3).

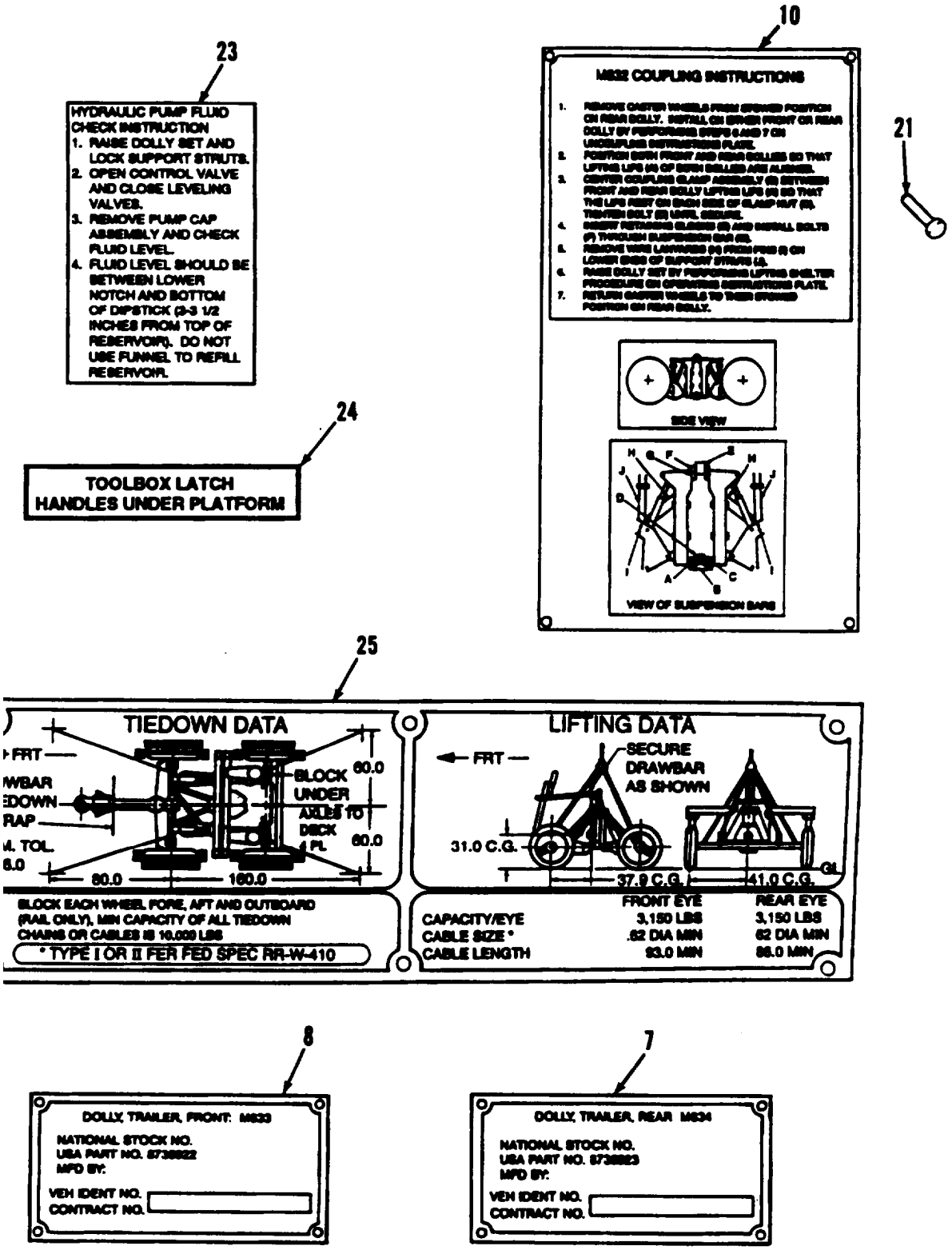

FIGURE 40. DATA PLATES AND INSTRUCTION PLATES (SHEET 3 OF 3).

(1) ITEM NO	(2) SMR CODE	(3) CAGEC	(4) PART NUMBER	(5) DESCRIPTION AND USABLE ON CODES (UOC)	(6) QTY
				GROUP 2210 DATA PLATES AND INSTRUCTION HOLDERS FIG.40 DATA PLATES AND INSTRUCTION PLATES	
1	PFOZZ	19207	11649069	PLATE,IDENTIFICATIO UOC:C12	1
1	PFOZZ	19207	11652471	PLATE,IDENTIFICATIO UOC:151	1
1	PFOZZ	19207	11588333	PLATE,IDENTIFICATIO UOC:265	1
2	PAOZZ	96906	MS21318-29	SCREW,DRIVE	6
3	PAOZZ	96906	MS21318-19	SCREW,DRIVE	12
4	PFOZZ	19207	11649095	PLATE,INSTRUCTION UOC:C12	4
4	PFOZZ	19207	11588327	PLATE,INSTRUCTION UOC:151,265	4
4	PFOZZ	19207	11647945	PLATE,INSTRUCTION UOC:151,265	4
5	PAOZZ	19207	12250218	PLATE,INSTRUCTION UOC:C12	1
5	PAOZZ	19207	11652470	PLATE,INSTRUCTION UOC:151	1
5	PFOZZ	19207	12440436	PLATE,OPERATING INS SN J089-001 THRU 159 & JO17-160 THRU 350 UOC:C12	1
6	PAOZZ	96906	MS35206-212	SCREW,MACHINE	12
7	XBOZZ	19207	11588330	PLATE,IDENTIFICATIO FRONT UOC:265	1
7	XBOZZ	19207	11652468	PLATE,IDENTIFICATO REAR UOC:151	1
7	XBOZZ	19207	11649076	PLATE,IDENTIFICATIO REAR UOC:C12	1
8	XBOZZ	19207	11588332	PLATE,IDENTIFICATIO SERVICE UOC:265	1
8	XBOZZ	19207	11652467	PLATE,IDENTIFICATO FRONT UOC:151	1
8	XBOZZ	19207	11649077	PLATE,IDENTIFICATIO FRONT UOC:C12	1
9	PFOZZ	19207	11649070	PLATE,INSTRUCTION UOC:C12	1
9	PAOZZ	19207	11588329	PLATE,INSTRUCTION UOC:265	1
9	PFOZZ	19207	11647949	PLATE,INSTRUCTION SN J089-001 THRU 159 & J017-160 THRU 350 UOC:151	1
9	PFOZZ	19207	12440437	LABEL SN J089-001 THRU 159 & J017-160 THRU 350 UOC:C12	1
10	PFOZZ	19207	11652469	PLATE,INSTRUCTION UOC:151	1
10	PFOZZ	19207	11588328	PLATE,INSTRUCTION	1

(1) ITEM NO	(2) SMR CODE	(3) CAGEC	(4) PART NUMBER	(5) DESCRIPTION AND USABLE ON CODES (UOC)	(6) QTY
				UOC:265	
10	PFOZZ	19207	12441072	PLATE, INSTRUCTION SN J089-001 THRU 159 & J017-160 THRU 350 UOC:C12	1
10	PFOZZ	19207	11631730	PLATE, INSTRUCTION SN J089-001 THRU 159 & J017-160 THRU 350 UOC:C12	1
11	PFOZZ	19207	11588364	PLATE,IDENTIFICATIO LIGHT BULB UOC:265	1
12	XBOZZ	19207	11588331	PLATE,IDENTIFICATIO REAR UOC:265	1
13	PAOZZ	96906	MS35338-43	WASHER,LOCK UOC:265	2
14	PAOZZ	96906	MS35207-264	SCREW,MACHINE UOC:265	2
15	PAOZZ	19207	12302516	DECAL BRAKE FLUID	1
16	XBOZZ	19207	11612101	PLATE,INSTRUCTION UOC:151	1
17	PAOZZ	96906	MS21318-21	SCREW,DRIVE UOC:151	12
18	PFOZZ	19207	11612100	PLATE,IDENTIFICATIO UOC:151	1
19	PFOZZ	19207	12440407	LABEL CAUTION SN J089-001 THRU 159 & J017-160 THRU 350 UOC:C12	1
20	PFOZZ	19207	12440405	LABEL SN J089-001 THRU 159 & J017-160 THRU 350 UOC:C12	1
21	PAOZZ	53551	RV250-4-2	RIVET,BLIND SN J089-001 THRU 159 & J017-160 THRU 350 UOC:C12	8
22	PFOZZ	19207	12440429	LABEL WARNING SN J089-001 THRU 159 & J017-160 THRU 350 UOC:C12	1
23	PFOZZ	19207	12354228	PLATE,INSTRUCTION SN J089-001 THRU 159 & J017-160 THRU 350 UOC:C12	2
24	PFOZZ	19207	12440374	LABEL,TOOLBOX SN J089-001 THRU 159 & J017-160 THRU 350 UOC:C12	1
25	PFOZZ	19207	12355972	PLATE,INSTRUCTION SN J089-001 THRU 159 & J017-160 THRU 350 UOC:C12	1

END OF FIGURE

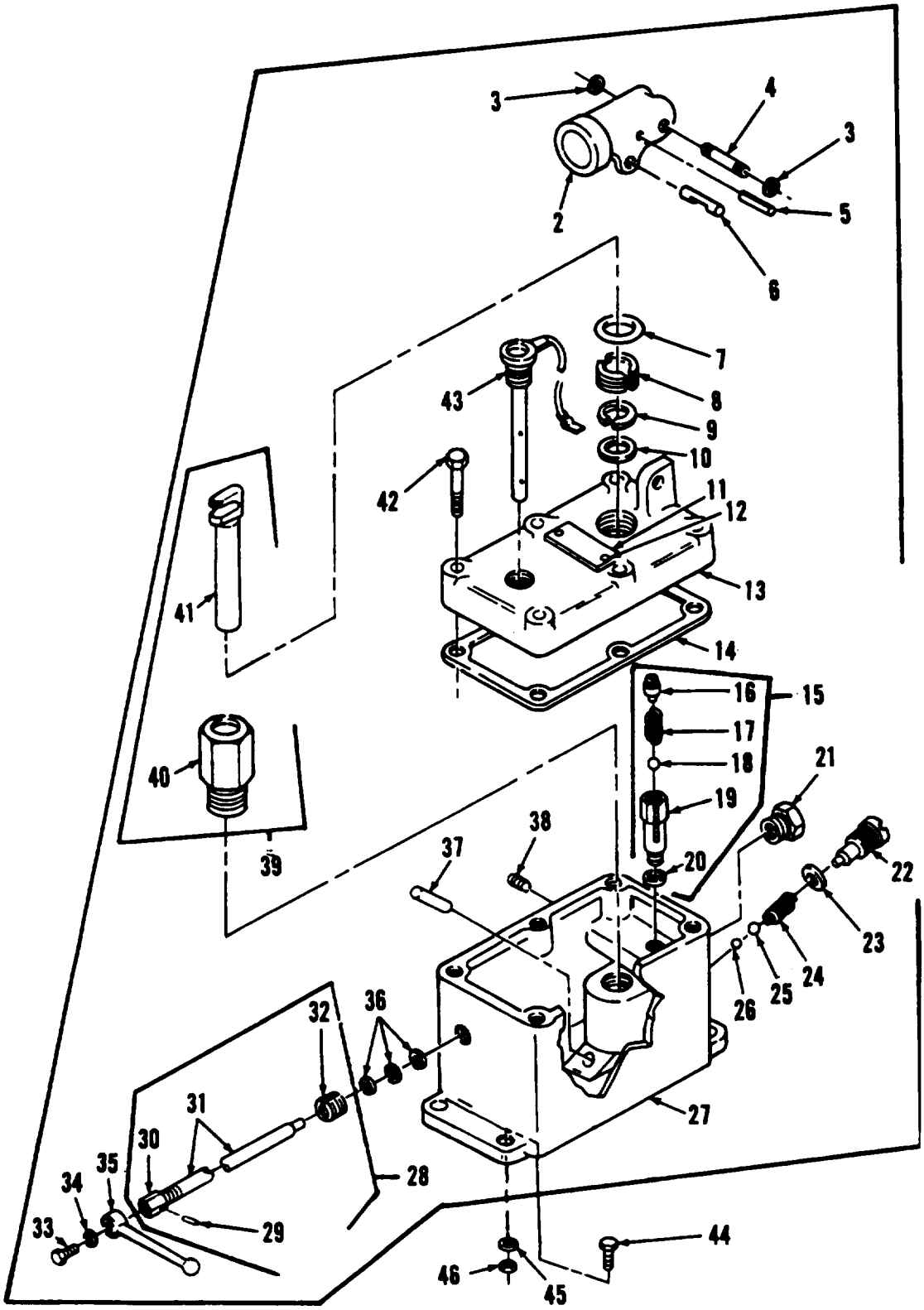

FIGURE 41. HYDRAULIC PUMP (M840).

(1) ITEM NO	(2) SMR CODE	(3) CAGEC	(4) PART NUMBER	(5) DESCRIPTION AND USABLE ON CODES (UOC)	(6) QTY
				GROUP 24 HYRAULIC AND FLUID SYSTEMS GROUP 2401 PUMP AND MOTOR FIG.41 HYDRAULIC PUMP (M840)	
1	PAOOZ	26952	HP-6001-51-12	.PUMP,HYDRAULIC RAM UOC:151	2
2	PAOZZ	26952	B8008.060	.BEAM,HYDRAULIC PUMP UOC:151	1
3	KFOZZ	26952	A8008.049	.RING PART OF KIT P/N KH2000 UOC:151	2
4	PAOZZ	26952	A8018.061	.PIN,STRAIGHT,HEADLE UOC:151	1
5	PAOZZ	26952	A8001.057	.PIN STRAIGHT HEAD UOC:151	1
6	XBOZZ	26952	A8019.061	.PIN,PUMP PLUNGER UOC:151	1
7	PCOZZ	26952	A8009.037	.GASKET UOC:151	1
8	PAOZZ	26952	A8018.021	.PACKING NUT UOC:151	1
9	KFOZZ	05842	P146.75	.PACKING MATERIAL PART OF KIT P/N KH2000 UOC:151	1
10	KFOZZ	26952	P146.118	.WIPER UOC:151	1
11	PAOZZ	18876	11031078-1	.PLATE,IDENTIFICATIO UOC:151	1
12	XBOZZ	26953	AJ100.001	.SCREW,DRIVE UOC:151	2
13	PAOZZ	26952	C8007-098	.COVER,ACCESS UOC:151	1
14	PAOZZ	07505	P146-161	.GASKET PART OF KIT P/N KH2000 UOC:151	1
15	PAOZZ	07505	P307.900	.VALVE,SAFETY RELIEF UOC:151	1
16	XAOZZ	26952	B164.232	.PLUG PART OF P307.900 UOC:151	1
17	PAOZZ	05842	B162-206	.SPRING,SPECIAL PART OF P307.900 UOC:151	1
18	PAOZZ	05842	B1008-016	.BALL,BEARING PART OF P307.900 UOC:151	1
19	XAOZZ	26952	P307.190	.BODY,VALVE PART OF P307.900 UOC:151	1
20	PAOZZ	26952	B159-167	.GASKET PART OF P307.900 UOC:151	1
21	XBOZZ	26952	A8000.212	.PLUG,PIPE UOC:151	1
22	XBOZZ	26952	P307-186	.SCREW,EXTERNALLY RE UOC:151	1
23	PAOZZ	43999	2W2SP-33-22-62	.WASHER,FLAT UOC:151	1
24	KFOZZ	26952	H613.183	.SPRING	1

(1) ITEM NO	(2) SMR CODE	(3) CAGEC	(4) PART NUMBER	(5) DESCRIPTION AND USABLE ON CODES (UOC)	(6) QTY
				UOC:151	
25	KFOZZ	26952	W12.16	.BALL,BEARING PART OF KIT P/N KH2000	1
				UOC:151	
26	KFOZZ	26952	E14.16	.BALL PART OF KIT P/N KH2000	1
				UOC:151	
27	XBOZZ	26952	C8031.005	.HOUSING,PUMP	1
				UOC:151	
28	PAOZZ	05842	H7-900	.SPINDLE,RELEASE VAL	1
				UOC:151	
29	XAOZZ	26952	H11.261	.PIN PART OF H7-900	1
				UOC:151	
30	XAOZZ	26952	H8.010	.VALVE,RELEASE PART OF H7-900	1
				UOC:151	
31	XAOZZ	26952	H6.199	.SPINDLE,VALVE PART OF H7-900	1
				UOC:151	
32	PAOZZ	07505	P60-11	.INSERT,SCREW THREAD PART OF H7-900	1
				UOC:151	
33	XBOZZ	26952	A8016.048	.SCREW,MACHINE	1
				UOC:151	
34	XBOZZ	26952	A8000.066	.WASHER	1
				UOC:151	
35	PAOZZ	26952	P6012	.LEVER,MANUAL CONTRO	1
				UOC:151	
36	KFOZZ	26952	A1028.074	.PACKING, PART OF KIT P/N KH2000	4
				UOC:151	
37	XBOZZ	26952	P307.18	.SCREEN	1
				UOC:151	
38	XBOZZ	26953	A8018.006	.PLUG,PIPE	1
				UOC:151	
39	KFOZZ	26953	A8087.900	.CYLINDER,SUBASSEMBL PART OF KIT P/N KH2000	1
				UOC:151	
40	XAOZZ	26952	P146-50	.CYLINDER PISTON PART OF A8087.900	1
				UOC:151	
41	XAOZZ	26952	A8059.040	.PISTON PART5 OF A8087.900	1
				UOC:151	
42	PAOZZ	26952	A8017.048	.BOLT,MACHINE	6
				UOC:151	
43	PAOZZ	19207	11612205	.CAP,BRAKE,AIR HYDRA	1
				UOC:151	
44	PAOZZ	96906	MS90726-36	SCREW,CAP,HEXAGON H	4
				UOC:151	
45	PAOZZ	96906	MS35338-45	WASHER,LOCK	4
				UOC:151	
46	PAOZZ	96906	MS51968-5	NUT,PLAIN,HEXAGON	4
				UOC:151	

END OF FIGURE

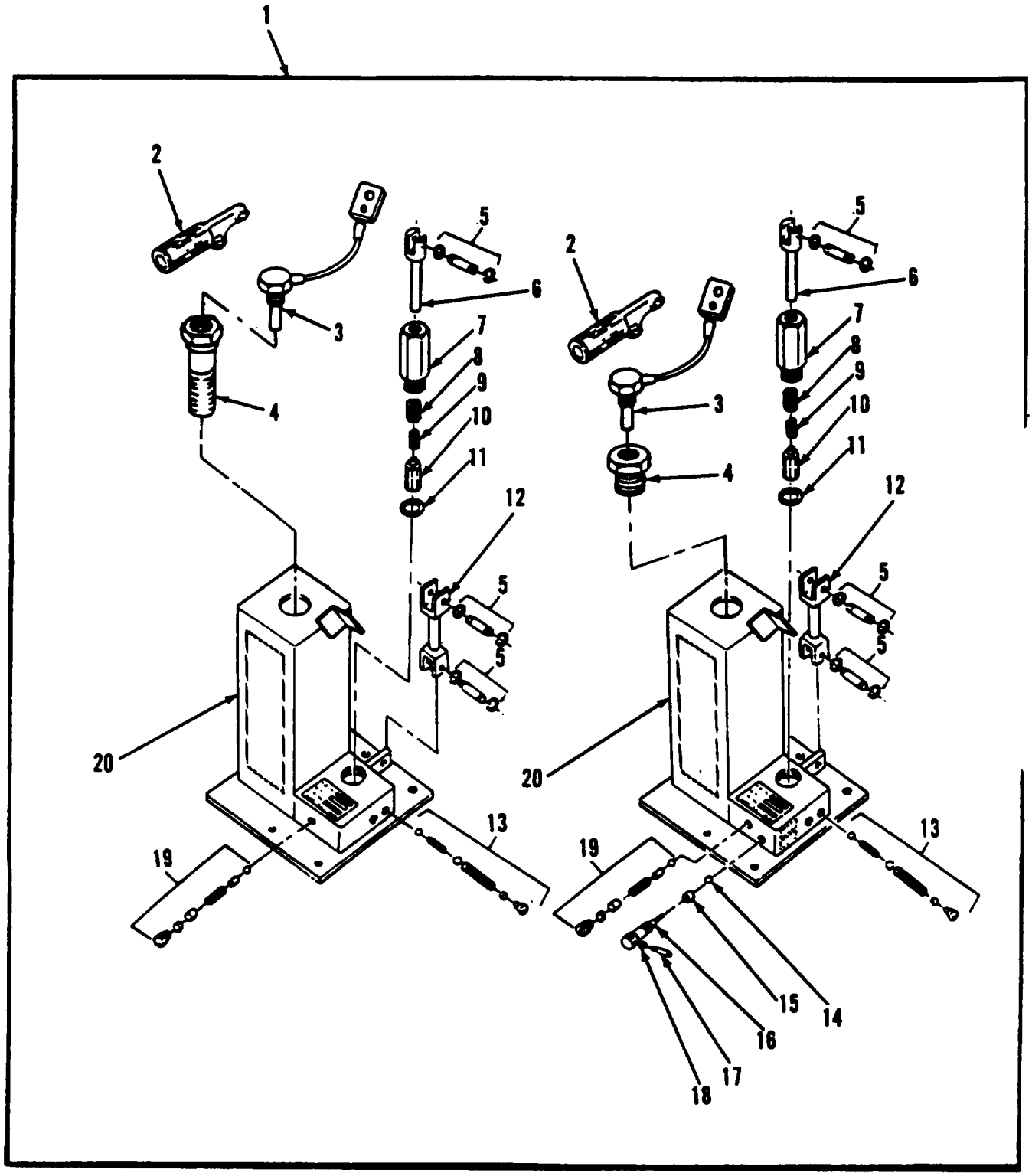

FIGURE 42. HYDRAULIC PUMP (M832).

(1) ITEM NO	(2) SMR CODE	(3) CAGEC	(4) PART NUMBER	(5) DESCRIPTION AND USABLE ON CODES (UOC)	(6) QTY
				GROUP 2401 PUMP AND MOTOR FIG.42 HYDRAULIC PUMP (M832)	
1	PAOZZ	19207	12250289	PUMP,HYDRAULIC RAM UOC:C12	2
1	PAOOO	95745	MK2179	PUMPING UNIT,HYDRAU SN J089-001 THRU 159 & J017-160 THRU 350 UOC:C12	2
2	PAOZZ	95745	CP13-9	.LEVER,MANUAL CONTRO UOC:C12	1
3	PAOZZ	19207	11612205-1	.GAGE ROD-CAP,LIQUID SN J089-001 THRU 159 & J017-160 THRU 350 UOC:C12	1
4	PAOZZ	81348	WW-P-471BDQBDEC	.BUSHING,PIPE SN J089-001 THRU 159 & J017-160 THRU 350 UOC:C12	1
4	PFOZZ	19207	12440383	.STRAINER ASSY SN J089-001 THRU 159 & J017-160 THRU 350 UOC:C12	1
5	PAOZZ	95745	CP13-10RP	.PIN,GROOVED,HEADLES UOC:C12	3
6	XAOZZ	95745	P1-7	.PISTON,PUMP UOC:C12	1
7	XBOZZ	95745	P1-6	.BARREL,PUMP UOC:C12	1
8	KFOZZ	95745	P1-17	.PACKING,PUMP PART OF KIT P/N MK1772-20 UOC:C12	1
9	XBOZZ	95745	P1-18	.SPRING UOC:C12	1
10	XBOZZ	95745	P1-19	.SLEEVE UOC:C12	1
11	PAOZZ	95745	P1-20	.PACKING,PREFORMED PART OF KIT P/N MK1772-20 UOC:C12	1
12	PAOZZ	95745	CP13-12	.LINK,PUMP UOC:C12	1
13	PAOZA	95745	P1-12RP	.PARTS KIT,HYDRAULIC PART OF KIT P/N MK1772-20 UOC:C12	1
14	PAOZZ	96906	MS19059-2416	.BALL,BEARING UOC:C12	1
15	PAOZZ	19207	12296556	.BUSHING,NONMETALLIC UOC:C12	1
16	PAOZZ	19207	12250223	.RELEASE,VALVE,SCREW UOC:C12	1
17	PAOZZ	19207	12250225	.STUD,RECESSED AND S UOC:C12	1
18	PAOZZ	96906	MS35691-5	.NUT,PLAIN,HEXAGON UOC:C12	1
19	PAOZZ	95745	CP13-13RP	.VALVE,OVERLOAD PART OF KIT P/N MK1772-20	1

(1) ITEM NO	(2) SMR CODE	(3) CAGEC	(4) PART NUMBER	(5) DESCRIPTION AND USABLE ON CODES (UOC)	(6) QTY
				UOC:C12	
				END OF FIGURE	

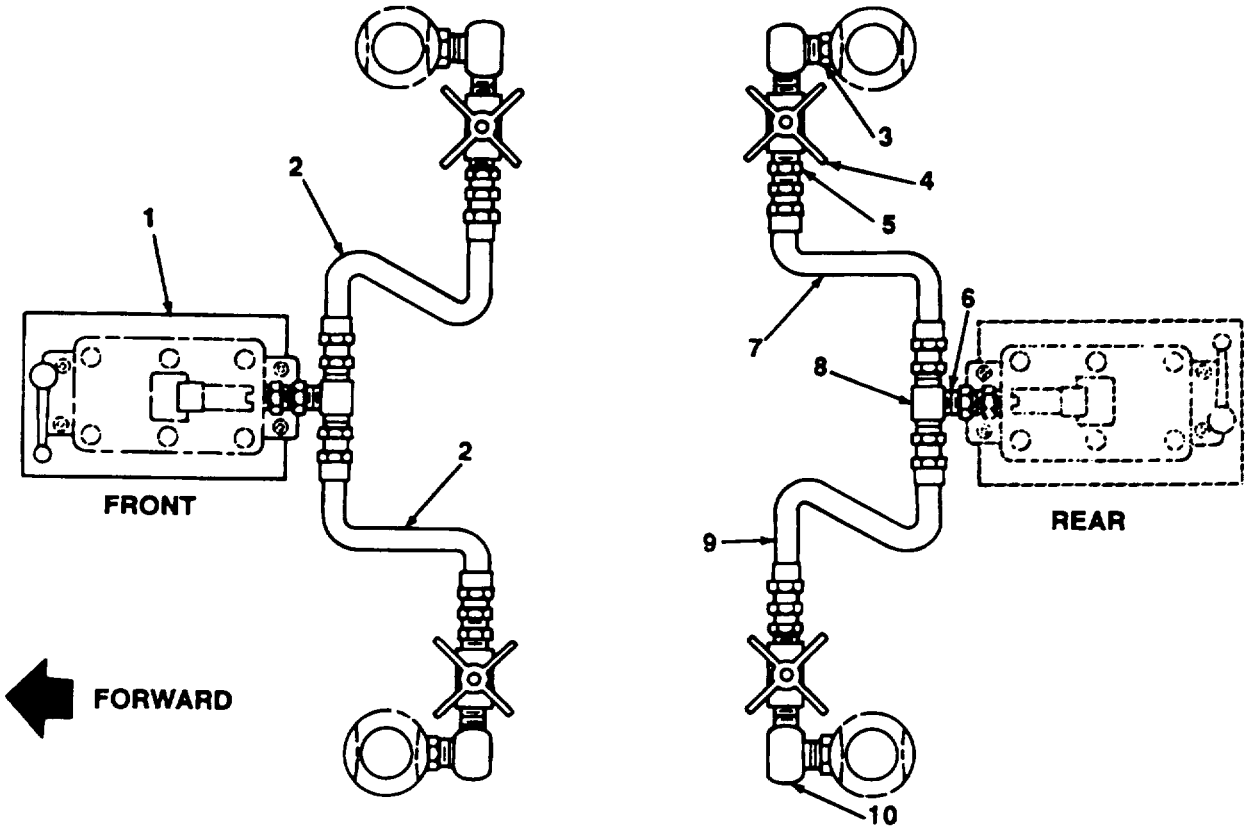

FIGURE 43. HYDRAULIC SYSTEM COMPONENTS (M840).

(1) ITEM NO	(2) SMR CODE	(3) CAGEC	(4) PART NUMBER	(5) DESCRIPTION AND USABLE ON CODES (UOC)	(6) QTY
				GROUP 2406 STRAINERS, FILTERS, LINES, AND FITTINGS, ETC. FIG.43 HYDRAULIC SYSTEM COMPONENTS (M840)	
1	PAOZZ	19207	11652425	BRACKET,MOUNTING UOC:151	1
2	PAOZZ	96906	MS500083A040360	HOSE ASSEMBLY,NONME UOC:151	2
3	PAOZZ	24617	444029	REDUCER,PIPE UOC:151	4
4	PAOFF	19207	11602353	VALVE,GLOBE UOC:151	4
5	PAOZZ	96906	MS51500A4-4S	ADAPTER,STRAIGHT,PI UOC:151	4
6	PAOZZ	72582	0112877	BUSHING,PIPE UOC:151	2
7	PAOZZ	96906	MS500083A040280	HOSE ASSEMBLY,NONME UOC:151	1
8	PAOZZ	96906	MS51512A4S	TEE,PIPE TO TUBE UOC:151	2
9	PAOZZ	96906	MS500083A040580	HOSE ASSEMBLY,NONME UOC:151	1
10	PAOZZ	19207	8395403	ELBOW,PIPE UOC:151	4
				END OF FIGURE	

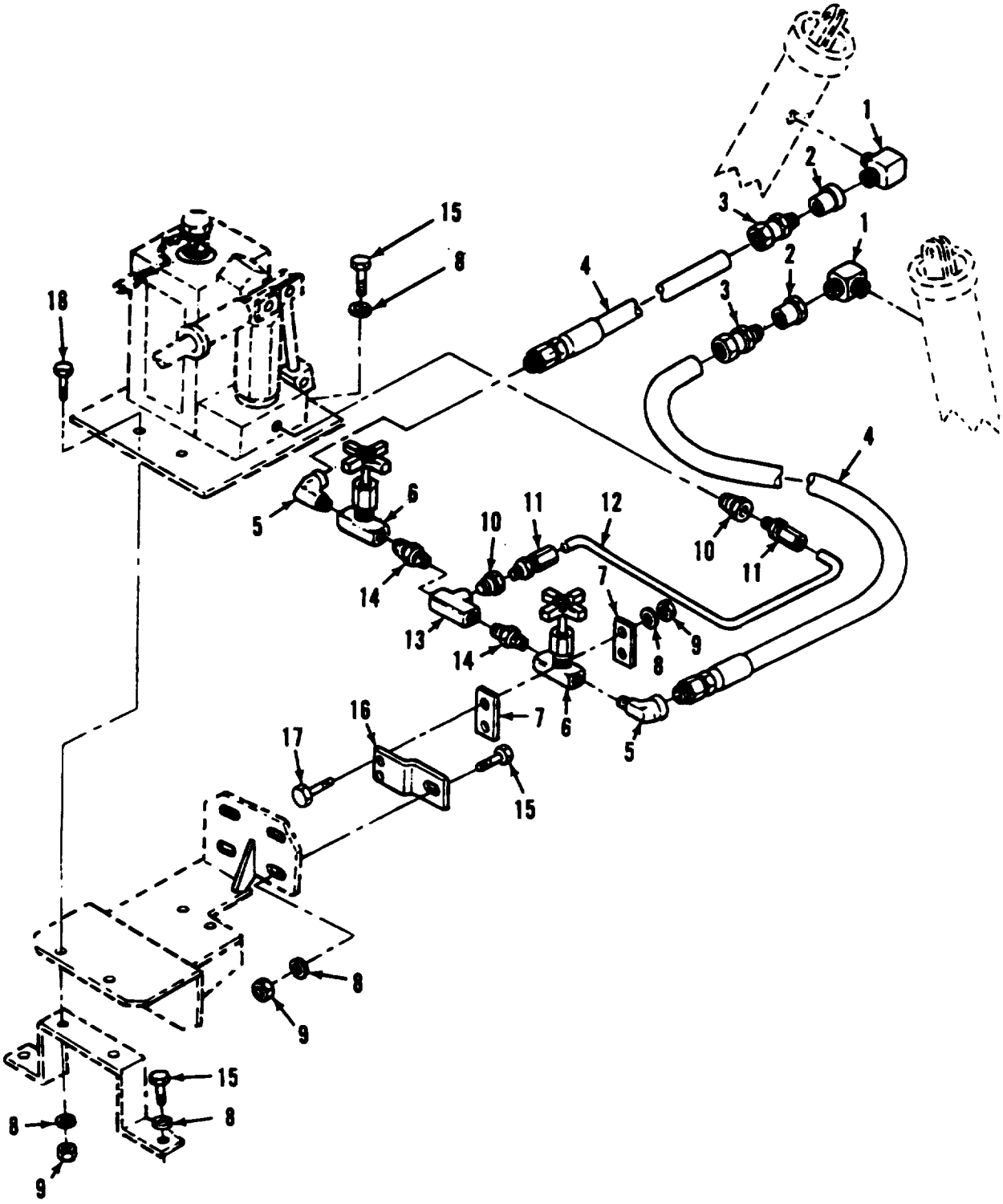

FIGURE 44. HYDRAULIC SYSTEM COMPONENTS (FRONT PUMP, M832 EXCEPT SN J089-001 THRU 159 AND J017-160 THRU 350) (SHEET 1 OF 3).

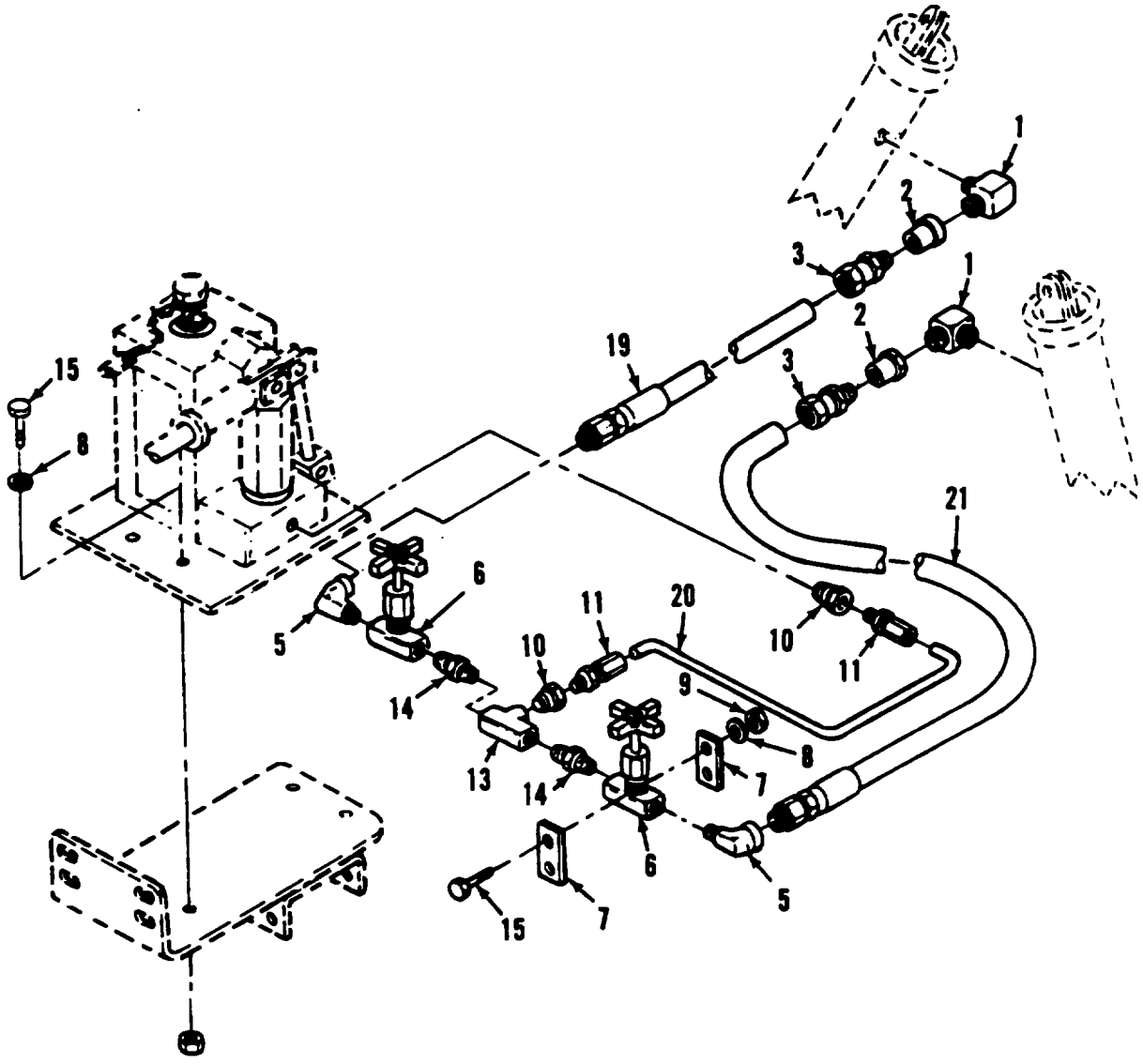

FIGURE 44. HYDRAULIC SYSTEM COMPONENTS (REAR PUMP, M832 EXCEPT SN J089-001 THRU 159 AND J017-160 THRU 350) (SHEET 2 OF 3).

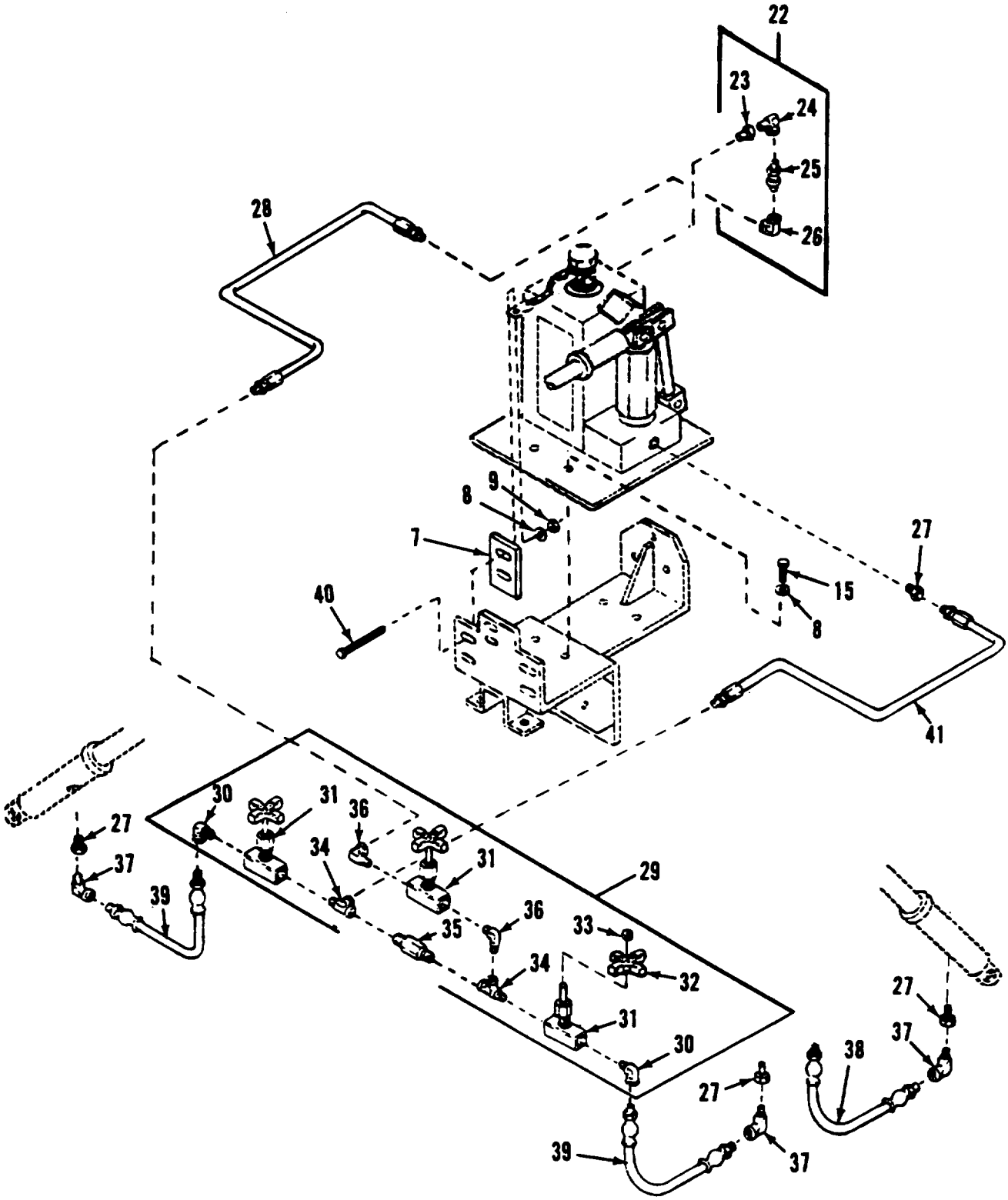

FIGURE 44. HYDRAULIC SYSTEM COMPONENTS (IMPROVED PUMP, M832 SN J089-001 THRU 159 AND J017-160 THRU 350 ONLY) (SHEET 3 OF 3).

(1) ITEM NO	(2) SMR CODE	(3) CAGEC	(4) PART NUMBER	(5) DESCRIPTION AND USABLE ON CODES (UOC)	(6) QTY
				GROUP 2406 STRAINERS, FILTERS, LINES, AND FITTINGS, ETC. FIG.44 HYDRAULIC SYSTEM COMPONENTS (M832)	
1	PAOZZ	19207	8395403	ELBOW,PIPE UOC:C12	4
2	PAOZZ	24617	444029	REDUCER,PIPE UOC:C12	4
3	PAOZZ	19207	8713987	COUPLING,PIPE UOC:C12	4
4	PAOZZ	19207	11649134-1	HOSE ASSEMBLY,NONME FRONT UOC:C12	2
5	PAOZZ	88044	AN914-2K	ELBOW,PIPE UOC:C12	4
6	PAOZZ	19207	8744235	VALVE,GLOBE UOC:C12	4
7	PAOZZ	19207	12255117	SPACER,PLATE UOC:C12	6
8	PAOZZ	96906	MS35338-45	WASHER,LOCK UOC:C12	18
9	PAOZZ	96906	MS51967-5	NUT,PLAIN,HEXAGON UOC:C12	24
10	PAOZZ	88044	AN912-2K	BUSHING,PIPE UOC:C12	4
11	PAOZZ	96906	MS51819-5SS	ADAPTER,STRAIGHT,PI UOC:C12	4
12	PAOZZ	19207	12259601	TUBE,BENT,METALLIC FRONT UOC:C12	1
13	PAOZZ	88044	AN917-2K	TEE,PIPE UOC:C12	2
14	PAOZZ	88044	AN911-2K	NIPPLE,PIPE UOC:C12	4
15	PAOZZ	96906	MS90725-33	BOLT,MACHINE UOC:C12	24
16	PFOZZ	19207	12255118	BRACKET,MOUNTING FRONT UOC:C12	2
17	PAOZZ	80204	B1821BH031C200N	BOLT,MACHINE MACHINE UOC:C12	2
18	PAOZZ	96906	MS90725-36	BOLT,MACHINE UOC:C12	2
19	PAOZZ	19207	11649134-2	HOSE ASSEMBLY,NONME REAR UOC:C12	1
20	PAOZZ	19207	12259518	TUBE,BENT,METALLIC REAR UOC:C12	1
21	PAOZZ	19207	11649134-3	HOSE ASSEMBLY,NONME REAR UOC:C12	1
22	A0000	19207	12440390	FILTER ASSY SN J089-001 THRU 159 & J017-160 THRU 350 UOC:C12	1
23	PAOZZ	81343	6-4 140140C	.BUSHING SN J089-001 THRU 159 & J017-160 THRU 350	2

(1) ITEM NO	(2) SMR CODE	(3) CAGEC	(4) PART NUMBER	(5) DESCRIPTION AND USABLE ON CODES (UOC)	(6) QTY
				UOC:C12	
24	PAOZZ	81343	4-4 140239C	.ELBOW,STREET SN J089-001 THRU 159 & J017-160 THRU 350 UOC:C12	1
25	PAOZZ	18034	SS-4FW2-15	.FILTER SN J089-001 THRU 159 & J017-160 THRU 350 UOC:C12	1
26	PAOZZ	81343	4-4 140238C	.ELBOW SN J089-001 THRU 159 & J017-160 THRU 350 UOC:C12	1
27	PAOZZ	81343	6-4 140140C	REDUCER,PIPE SN J089-001 THRU 159 & J017-160 THRU 350 UOC:C12	6
28	PFOZZ	19207	12440395	TUBE RETURN SN J089-001 THRU 159 & J017-160 THRU 350 UOC:C12	2
29	A0000	19207	12440384	FITTING ASSY, VALVE SN J089-001 THRU 159 & J017-160 THRU 350 UOC:C12	2
30	PAOZZ	81343	4-4 140239C	.ELBOW STREET SN J089-001 THRU 159 & J017-160 THRU 350 UOC:C12	6
31	PAOZZ	09990	MV400S	.VALVE NEEDLE SN J089-001 THRU 159 & J017-160 THRU 350 UOC:C12	6
32	PAOZZ	09990	002118-6	..HANDLE ZINK ALLOY SN J089-001 THRU 159 & J017-160 THRU 350 UOC:C12	3
33	PFOZZ	09990	454001	..NUT,SELF,LOCKING SN J089-001 THRU 159 & J017-160 THRU 350 UOC:C12	3
34	PAOZZ	81343	4-4-4 140424C	.TEE,PIPE SN J089-001 THRU 159 & J017-160 THRU 350 UOC:C12	4
35	PFOZZ	30780	1/4 X 2.0 FFF	.NIPPLE SN J089-001 THRU 159 & J017-160 THRU 350 UOC:C12	2
36	PAOZZ	81343	4-4 140237C	.ELBOW,MALE SN J089-001 THRU 159 & J017-160 THRU 350 UOC:C12	2
37	PAOZZ	81343	4-4 140239C	.ELBOW,PIPE SN J089-001 THRU 159 & J017-160 THRU 350 UOC:C12	6
38	PFOZZ	87373	F381-1313-4-4-4X 85	HOSE ASSY,REAR SN J089-001 THRU 159 & J017-160 THRU 350 UOC:C12	1
39	PFOZZ	87373	F381-1313-4-4-4X 46	HOSE ASSY SN J089-001 THRU 159 & J017-160 THRU 350 UOC:C12	2
40	PAOZZ	80204	B1821BH031C200N	BOLT,MACHINE SN J089-001 THRU 159 & J017-160 THRU 350 UOC:C12	12

(1) ITEM NO	(2) SMR CODE	(3) CAGEC	(4) PART NUMBER	(5) DESCRIPTION AND USABLE ON CODES (UOC)	(6) QTY
41	PFOZZ	19207	12440394	TUBE, OUTPUT SN J089-001 THRU 159 & J017-160 THRU 350 UOC:C12	2

END OF FIGURE

(1) ITEM NO	(2) SMR CODE	(3) CAGEC	(4) PART NUMBER	(5) DESCRIPTION AND USABLE ON CODES (UOC)	(6) QTY
				GROUP 94 REPAIR KITS	
				GROUP 9401 REEPAIR KITS	
				FIG. KITS	
	PAOZZ	19207	8332057	BRAKE SHOE HOLD-DOW	V
				UOC:151,265	
	PAOZZ	26952	KH2000	REPAIR KIT,HYDRAULI	V
				UOC:151,265	
	PAOZZ	95745	MK1772-20	PARTS KIT,HYDRAULIC	V
				UOC:C12	
				BALL (1) 41-26	
				BALL, BEARING (1) 41-25	
				BOLT,SHOULDER (8) 13-8	
				CYLINDER,SUBASSEMBL(1) 41-39	
				GASKET (1) 41-14	
				PACKING MATERIAL (1) 41-9	
				PACKING, (4) 41-36	
				PACKING,PUMP (1) 42-8	
				PACKING,PREFORMED (1) 42-11	
				PARTS KIT,HYDRAULIC(1) 42-13	
				PIN,GUIDE (8) 13-7	
				RING (2) 41-3	
				VALVE,OVERLOAD (1) 42-19	
				WASHER,GUIDE PIN (8) 13-3	
				WASHER,LOCK (16) 13-24	
				WASHER,RECESSED (8) 13-4	
				END OF FIGURE	

(1) ITEM NO	(2) SMR CODE	(3) CAGEC	(4) PART NUMBER	(5) DESCRIPTION AND USABLE ON CODES (UOC)	(6) QTY
				GROUP 95 GENERAL USE STANDARIZED PARTS	
				GROUP 9501 BULK MATERIAL	
				FIG.BULK	
1	PAOZZ	19207	11682067	BRACKET,LIGHT RETEN	V
2	PFOZZ	19207	11647952-1	BUSHING,SLEEVE UOC:C12	V
3	PAOZZ	18876	8527586	CHAIN,WELDED	V
4	PAOZZ	81337	6-1-5876	FASTENER TAPE,HOOK UOC:C12,265	V
5	PAOZZ	96906	MS20257C6-7200	HINGE,BUTT UOC:C12	V
6	PAOZZ	13499	152-1757-00	INSULATION SLEEVING	V
7	PAOZZ	81349	M25995B3FC020	PIPE,METALLIC UOC:C12	V
8	PAOZZ	81348	QQ-A-250/8	SHEET,METAL UOC:C12	V
9	PAOZZ	81349	M13486-1-5	WIRE,ELECTRICAL UOC:151,265	V
10	PAOZZ	96906	MS20995N51	WIRE,NONELECTRICAL UOC:C12	V
				END OF FIGURE	

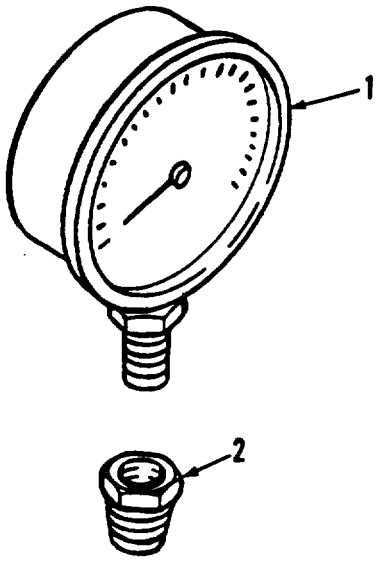

FIGURE 45. SPECIAL TOOLS.

(1) ITEM NO	(2) SMR CODE	(3) CAGEC	(4) PART NUMBER	(5) DESCRIPTION AND USABLE ON CODES (UOC)	(6) QTY
				GROUP 91 CHEMICAL, BIOLOGICAL, AND RADIOLOGICAL (CBR) EQUIPMENT	
				GROUP 9129 SPECIAL TOOLS AND ACCESSORIES	
				FIG. 45 SPECIAL TOOLS	
1	PEFZZ	61349	151469	GAGE,PRESSURE,DIAL UOC:C12	
2	PEFZZ	30780	1-4-1-8PTRSS	BUSHING,PIPE UOC:C12	
				END OF FIGURE	

CROSS-REFERENCE INDEXES

NATIONAL STOCK NUMBER INDEX

STOCK NUMBER	FIG	ITEM	STOCK NUMBER	FIG	ITEM
5310-00-003-4094	36	44	2640-00-060-3550	23	4
5315-00-007-6103	28	22	5305-00-068-0502	6	32
5315-00-012-0123	31	13		31	4
	32	14	5305-00-068-0511	33	4
5315-00-013-7214	8	17	5305-00-068-0515	26	18
5315-00-013-7228	32	37	5305-00-069-5579	6	37
4730-00-014-1539	43	6		11	15
	45	2	5305-00-071-1318	26	15
6110-00-014-6259	1	1	5305-00-071-1323	26	13
2530-00-015-8245	7	25	5305-00-071-2059	6	37
	8	27		9	16
	9	10	5305-00-071-2069	9	6
	10	12		10	3
	11	18		11	28
	E-11	15.1		37	6
6240-00-019-0877	4	6	5305-00-071-2070	6	15
	4	10	5305-00-071-2079	6	18
	5	11	5305-00-071-2505	6	32
6240-00-019-3093	5	5		6	34
2530-00-021-2366	20	7		11	30
	21	13	3040-00-076-8670	32	1
2530-00-026-0255	22	2	5310-00-080-6004	20	9
2530-00-026-0265	22	18		21	25
2530-00-026-3916	22	12	5310-00-081-4219	21	15
2530-00-030-1408	14	3		32	16
4730-00-035-8036	44	24		38	31
	44	30	5310-00-082-1679	8	26
	44	37	4010-00-082-5963	25	2
6240-00-044-6914	4	3		32	6
	5	4	5305-00-082-6721	1	19
5310-00-045-1358	28	7		1	21
5310-00-045-3296	2	26		2	2
	3	26		2	25
	17	2		3	2
	18	2		3	23
	21	9	3110-00-087-9881	22	19
	24	17	5995-00-088-4273	2	17
	27	12	4730-00-089-2515	21	22
	40	13	5330-00-090-2128	20	2
5310-00-045-3299	28	17		21	8
2640-00-050-1229	23	3	5365-00-090-5426	1	4
5306-00-050-1238	12	12		2	6
5305-00-051-0837	1	17		3	6
5305-00-054-5650	2	20	4730-00-090-9252	44	3
	3	20	3110-00-100-5951	22	17
5305-00-054-6654	1	6	3110-00-100-6153	42	14
	2	9	2510-00-103-2090	36	1
	3	9	2510-00-103-2091	38	1
2540-00-054-7702	28	5	6110-00-103-2092	3	1
5999-00-057-2929	5	8	2530-00-103-2162	11	1

CROSS-REFERENCE INDEXES

NATIONAL STOCK NUMBER INDEX

STOCK NUMBER	FIG	ITEM	STOCK NUMBER	FIG	ITEM
2530-00-103-2203	8	9	5310-00-209-1761	14	9
2530-00-106-5334	21	19	5305-00-225-3843	21	27
8315-00-106-5973	BULK	4	5306-00-225-8496	11	6
3120-00-107-1545	7	6		19	8
	8	7		22	1
3120-00-107-1554	35	5		32	18
	37	8	5306-00-225-8498	6	12
5340-00-111-5534	35	6		44	15
	36	3	5306-00-225-9084	4	14
	37	2		17	6
	38	5		18	4
5305-00-115-9526	5	14	5306-00-225-9086	28	12
	6	8	5306-00-225-9088	17	16
4730-00-116-6769	43	10	5305-00-225-9091	41	44
	44	1	5306-00-226-4825	10	9
5320-00-117-7522	26	11	5306-00-226-4833	44	17
4320-00-122-0619	42	2		44	40
4320-00-122-4327	42	12	5306-00-226-4842	6	35
5315-00-123-0002	42	5		9	14
5330-00-123-8671	41	7		10	16
4320-00-125-3208	42	13		10	17
5315-00-125-6779	28	21		11	16
5340-00-134-5121	22	9	9535-00-232-6874	BULK	8
5340-00-147-5281	34	3	5315-00-234-1848	28	6
2540-00-147-5282	34	3	9905-00-235-4446	40	11
9905-00-151-5599	40	4	5310-00-241-6604	26	31
6145-00-152-6499	BULK	9	5310-00-241-6667	6	20
5315-00-165-8480	32	11		35	2
5310-00-167-0828	32	36	4820-00-242-4064	33	3
5310-00-167-1309	7	12	5310-00-245-3424	21	16
5330-00-168-5673	13	16	5310-00-245-8825	6	29
5306-00-170-0141	22	14	5310-00-245-8828	35	2
4320-00-172-1817	41	1		36	16
4820-00-174-0339	21	20		37	1
2530-00-176-7859	22	11		38	2
5306-00-177-5278	22	13	5325-00-249-6352	6	13
4730-00-177-6166	44	34	5310-00-252-2130	13	10
3040-00-177-8122	6	26	5365-00-252-4770	25	6
5365-00-177-8283	6	22	5315-00-252-9921	26	40
2540-00-177-8299	28	1	4730-00-253-4412	20	4
4940-00-186-3199	KITS		5305-00-253-5615	40	17
2530-00-193-8183	22	5	5305-00-253-5620	40	2
2530-00-193-8187	22	5	4730-00-253-5757	21	11
4730-00-196-1505	20	13	2610-00-262-8677	23	1
9905-00-202-3639	39	4	5310-00-264-1243	8	15
4730-00-202-6491	20	5	5310-00-264-4086	13	4
9905-00-205-2795	39	3	5305-00-269-2804	6	14
5310-00-209-0965	6	38		15	2
	10	18	5305-00-269-3211	4	7
	11	14		20	8

CROSS-REFERENCE INDEXES

NATIONAL STOCK NUMBER INDEX

STOCK NUMBER	FIG	ITEM	STOCK NUMBER	FIG	ITEM
5305-00-269-3211	21	24	5310-00-407-9566	28	13
	27	16		38	32
5305-00-269-3248	32	30		41	45
2610-00-269-7383	23	2		44	8
2530-00-274-4511	14	5	4030-00-431-5536	25	1
5365-00-275-4519	34	7		29	2
5310-00-275-6635	14	7		32	7
4730-00-278-3912	43	3	5306-00-437-8765	13	8
	44	2	5315-00-451-1047	13	18
	44	23	4720-00-454-8618	20	6
	44	27	4720-00-454-8619	17	9
4730-00-278-5812	14	8		18	8
4730-00-279-0133	20	15	5330-00-461-7408	42	11
5325-00-281-1557	3	15	5330-00-462-0907	5	3
5940-00-283-5280	1	11	5307-00-463-4558	7	8
2530-00-288-2986	22	10		8	8
5340-00-290-4503	24	18	4720-00-489-5350	16	3
5340-00-291-5347	2	28	6220-00-500-0437	4	2
	17	3	4710-00-511-1692	16	5
	18	3	5310-00-516-0337	13	9
5330-00-297-7106	4	4	4730-00-516-7419	14	10
2530-00-312-1349	15	9		17	14
2530-00-319-6001	KITS			18	10
5360-00-321-6462	19	6	5310-00-518-5566	22	6
5330-00-334-4224	7	5	5310-00-519-6630	38	42
	8	5	5310-00-529-6514	13	3
5330-00-337-8593	36	38	4730-00-540-6146	21	21
1450-00-337-8662	15	3	3120-00-541-9862	7	11
4820-00-349-8952	41	15	5310-00-543-2009	1	20
4730-00-350-8600	21	18		2	24
5330-00-359-0442	16	2	5310-00-543-2410	2	19
5340-00-371-6507	41	32		3	19
5340-00-376-3039	28	10	5305-00-543-2419	34	4
5330-00-377-5503	41	14	5320-00-543-3680	27	8
4710-00-383-3450	BULK	7	2530-00-545-5406	28	14
2530-00-391-1210	13	14	3120-00-549-8098	32	25
5310-00-393-6685	1	8		36	30
	2	13		38	21
	3	13	5305-00-551-5097	8	2
4820-00-404-6071	44	31	5935-00-572-9180	5	6
5310-00-407-9566	6	5	5305-00-573-7897	7	2
	7	3	5310-00-574-0436	8	12
	8	3	5330-00-576-4609	1	5
	9	3		2	7
	10	8		3	7
	11	7	5310-00-579-5554	7	23
	13	24	5320-00-582-3298	40	21
	17	5	5310-00-582-5677	3	24
	18	5	5310-00-582-5965	6	31
	19	9		11	29

CROSS-REFERENCE INDEXES

NATIONAL STOCK NUMBER INDEX

STOCK NUMBER	FIG	ITEM	STOCK NUMBER	FIG	ITEM
5310-00-582-5965	21	28	5310-00-637-9541	31	9
	26	42		33	5
	32	20		34	5
	36	40	1730-00-651-8476	41	28
5310-00-584-5272	9	5	4730-00-659-7769	17	4
	10	4		18	6
	11	27	6220-00-669-5623	4	1
	28	9	2530-00-671-4783	15	7
	34	11	5330-00-678-9047	4	11
	36	29	5310-00-682-5930	26	29
	37	5	5970-00-682-8744	BULK	6
5340-00-584-6556	21	1	9905-00-685-6540	21	5
5310-00-584-7888	7	14	2530-00-715-7662	15	4
	13	21	5305-00-719-5124	26	3
	24	4	5305-00-719-5219	28	11
	24	14	5305-00-719-5235	36	46
5310-00-594-8038	22	6	4730-00-720-2007	44	11
4730-00-595-0083	20	1	4820-00-720-4488	20	14
	21	7	4010-00-720-4591	BULK	3
2640-00-596-3985	33	2	4730-00-720-4620	21	29
5340-00-598-0597	3	28	5320-00-721-5211	27	4
5360-00-598-7048	21	6	5305-00-721-5492	31	10
4720-00-600-9036	21	12	5340-00-721-8015	17	18
4720-00-600-9042	17	10	5310-00-723-4458	11	24
	18	15	5305-00-725-2317	15	8
4720-00-600-9140	21	17	5310-00-732-0558	20	11
4720-00-600-9141	44	4		27	18
4720-00-600-9153	44	19		28	8
4720-00-600-9156	44	21	5310-00-732-0559	22	7
2530-00-600-9158	41	43	5310-00-732-0560	28	8
9525-00-618-5462	BULK	10		34	12
5306-00-625-3222	13	19	2530-00-737-3260	14	6
5306-00-625-3241	9	11	2530-00-738-9061	22	20
	10	13	5340-00-740-9366	12	4
	11	19	5365-00-740-9618	35	10
5305-00-625-3258	36	18		37	18
5310-00-627-6128	4	8	5360-00-741-1017	13	5
	8	25	2530-00-752-1601	8	10
	9	12	2530-00-752-1602	8	16
	10	14	5310-00-752-1633	22	4
	11	20	5310-00-752-1650	22	21
5310-00-637-9541	6	9	2530-00-752-1654	22	15
	12	6	2530-00-752-1766	13	1
	14	2	2530-00-753-9270	14	4
	15	1	5330-00-759-7412	41	20
	15	6	5310-00-761-6882	26	30
	20	10	5310-00-761-7673	37	22
	21	26		38	38
	22	8	5310-00-762-6248	6	2
	27	17	5310-00-763-8901	7	15

CROSS-REFERENCE INDEXES

NATIONAL STOCK NUMBER INDEX

STOCK NUMBER	FIG	ITEM	STOCK NUMBER	FIG	ITEM
5310-00-763-8901	13	22	5310-00-820-6653	34	2
5310-00-763-8911	7	22	5340-00-821-0304	27	5
	8	24	5310-00-823-8803	34	6
5310-00-763-8920	34	1	9905-00-831-0208	21	4
5310-00-763-8921	24	11	5310-00-833-8567	5	7
5305-00-764-0070	4	13	5310-00-835-2037	17	8
5360-00-765-1896	41	17		18	9
5310-00-767-0445	1	12	5310-00-835-2140	8	14
5935-00-773-1428	1	2	5340-00-835-6336	BULK	5
	2	4	4730-00-837-7073	43	5
	3	4	4730-00-840-4289	44	14
4730-00-773-2163	16	1	5305-00-840-5938	40	3
5310-00-773-7618	13	13	5310-00-842-1488	13	12
6220-00-775-2384	4	12	5315-00-842-3044	13	11
5330-00-778-0451	19	3	5315-00-844-5831	26	20
5330-00-778-0454	19	2	5935-00-846-3883	1	3
5305-00-782-9489	12	9		2	5
5310-00-785-1762	7	24		3	5
	9	13	6220-00-846-9745	4	9
	10	15	5310-00-850-1611	5	13
	11	21	5310-00-853-9335	12	3
5315-00-797-5999	6	10	5305-00-855-0965	28	19
4730-00-800-7569	20	16	5320-00-855-2185	27	9
5315-00-802-0240	26	24	4730-00-866-3147	44	13
5365-00-804-2782	36	13	5310-00-877-5795	36	19
	38	9		38	26
4730-00-808-6814	32	2	5310-00-880-7744	44	9
5310-00-809-3079	34	10	5310-00-880-7746	13	23
5310-00-809-4058	26	28		41	46
	27	24	5306-00-884-8947	27	15
5310-00-809-4061	31	8	5315-00-889-2545	32	34
5310-00-809-5998	26	25	5310-00-891-1754	12	7
	36	45	5330-00-891-7826	22	16
5310-00-809-8533	24	12	5305-00-900-0576	38	40
	32	27	5315-00-902-0411	11	10
	38	37	6110-00-902-3230	2	1
5310-00-809-8536	31	11	5306-00-902-3233	24	15
5310-00-809-8541	32	10	5306-00-902-3235	7	9
	32	13	5306-00-902-3236	24	1
	35	3	5306-00-902-3238	37	20
	36	15		38	36
	37	7	5120-00-902-3298	24	2
	38	3	4720-00-902-3301	17	7
3110-00-812-7349	41	18		18	7
5360-00-813-7813	13	2	4720-00-902-3302	17	15
5315-00-814-3530	29	6		18	14
2540-00-815-6098	24	6	4720-00-902-3303	20	3
5315-00-816-1794	26	23		21	10
4730-00-817-1843	44	26	3110-00-902-3306	6	4
5340-00-818-1735	19	5		10	10

CROSS-REFERENCE INDEXES

NATIONAL STOCK NUMBER INDEX

STOCK NUMBER	FIG	ITEM	STOCK NUMBER	FIG	ITEM
3110-00-902-3306	11	12	5310-00-933-8121	3	3
2530-00-902-3311	35	9		31	3
2530-00-902-3312	37	19		39	2
6150-00-902-3313	2	17	5310-00-934-9739	2	14
5306-00-902-3405	37	11		3	14
5307-00-902-3407	34	8	5310-00-934-9758	27	13
4720-00-903-0462	20	17	5315-00-940-9468	32	9
	21	30	3120-00-941-2259	6	21
4010-00-903-0463	28	20	5310-00-943-2141	28	23
	36	48	5330-00-946-8344	2	18
3120-00-903-0464	6	27		3	18
2590-00-903-0465	31	1	5305-00-947-4355	24	3
2530-00-903-0466	20	12	5310-00-950-0039	32	33
2510-00-903-0487	34	13	5305-00-951-2437	36	47
2530-00-903-0489	7	20	9905-00-955-0536	41	11
	8	22	5305-00-958-5252	10	6
2990-00-903-0490	12	1	4730-00-959-3816	44	10
5325-00-903-0491	13	20	5305-00-969-3142	37	3
2510-00-903-0492	33	1	5310-00-971-7989	42	18
5310-00-903-5966	1	10	5310-00-974-6623	1	16
	2	11	5310-00-982-6562	35	11
	3	11		37	17
5340-00-904-1670	11	3	5305-00-984-6191	28	18
9905-00-905-5980	40	4	5305-00-984-6209	27	11
9905-00-905-8252	40	1	5305-00-988-1724	39	1
9905-00-905-8253	40	10	5305-00-988-1725	26	43
9905-00-905-8726	40	9	5305-00-988-1727	32	19
4730-00-908-3194	16	4	5305-00-989-7435	2	27
4730-00-908-6293	32	3		3	27
2530-00-909-3785	7	6		11	11
4730-00-909-8627	32	5		17	1
2590-00-911-5287	32	2		18	1
2530-00-918-6211	12	8		21	2
5305-00-921-0927	37	15		24	9
5310-00-925-9645	26	6		26	38
5310-00-926-1835	26	16		40	14
5315-00-926-5767	32	28	5305-00-993-0191	40	6
4730-00-929-0610	44	5	5315-00-993-4125	31	5
5310-00-929-6395	1	7	5305-00-995-3442	17	19
	2	10	3040-00-996-7209	41	35
	3	10	4010-01-006-4585	11	2
5310-00-931-3175	6	6		26	39
	9	4	5310-01-006-8845	13	17
	10	11	5315-01-020-0770	6	17
	11	22	5340-01-024-6707	11	8
5305-00-932-3280	35	13	5305-01-025-9980	30	4
	38	14	4820-01-026-9997	43	4
5310-00-933-8121	1	18	2530-01-027-0200	29	1
	2	3	2530-01-027-0201	8	6
	2	23	3040-01-027-6191	6	28

CROSS-REFERENCE INDEXES

NATIONAL STOCK NUMBER INDEX

STOCK NUMBER	FIG	ITEM	STOCK NUMBER	FIG	ITEM
2530-01-027-6944	8	13	2530-01-050-6876	6	28
4720-01-031-3293	43	9	5340-01-051-3592	15	5
4720-01-031-3294	43	2	4730-01-052-8253	42	4
5340-01-031-4452	32	32	5315-01-052-8994	6	10
5365-01-033-9389	44	7	2530-01-052-9384	6	7
3040-01-035-5014	32	1		9	8
2590-01-036-6758	32	29		10	5
2590-01-036-6759	32	29	5306-01-053-1879	36	22
5340-01-038-1765	36	28	4730-01-053-8749	41	8
2530-01-038-1766	38	29	9905-01-053-8856	40	18
2530-01-038-1767	36	26	5365-01-054-5062	12	5
6220-01-038-8292	10	2	5365-01-054-8825	6	22
	BULK	1	5340-01-055-4164	38	35
6230-01-038-8293	9	9	5340-01-055-8299	12	11
2540-01-038-8294	28	1	5340-01-063-8997	24	8
5935-01-038-9629	1	15	3040-01-068-1085	37	21
4320-01-039-3988	42	1	5306-01-075-8519	21	14
5340-01-039-4177	44	16		44	18
2530-01-040-4208	25	3	5315-01-091-1636	28	21
5307-01-040-4612	34	8	5306-01-091-1637	6	25
2530-01-040-4990	10	1	2530-01-091-1638	6	25
5340-01-041-4908	38	30	2530-01-091-1639	38	39
5306-01-042-2777	35	16	5340-01-091-1640	26	41
	37	12	2590-01-091-1641	24	10
	38	22	5340-01-091-1642	36	34
5340-01-043-8193	9	7	5340-01-091-1643	36	34
5310-01-044-0776	36	20	2590-01-091-1644	26	21
	38	25	5340-01-091-1645	26	26
5365-01-044-3503	36	21	2530-01-091-1646	30	1
	38	24	9905-01-091-1647	40	1
2530-01-044-3792	7	10	9905-01-091-1648	40	9
2530-01-044-5313	6	1	9905-01-091-1649	40	4
4320-01-044-7261	41	2	9905-01-091-1650	40	5
5340-01-044-9282	41	13	6680-01-092-4058	42	3
5365-01-045-3435	35	12	2530-01-092-4060	6	7
	36	10		11	26
	37	16	5330-01-095-5754	17	12
4820-01-046-3532	42	16		18	11
5315-01-046-7953	41	4	5330-01-095-5755	17	13
5306-01-047-0318	41	42		18	12
5315-01-047-2784	41	5	5365-01-095-9714	7	16
5340-01-047-7486	6	24		8	18
4820-01-048-3665	44	6	5315-01-096-7425	32	12
5307-01-048-6482	42	17	5310-01-097-3609	7	17
5306-01-048-9970	38	27		8	19
4710-01-049-5821	38	28	5310-01-097-3610	7	18
6110-01-050-5791	2	1		8	20
5340-01-050-5802	12	2	5310-01-097-3611	35	15
5365-01-050-6346	36	27		36	31
5365-01-050-6347	38	34		37	13

CROSS-REFERENCE INDEXES

NATIONAL STOCK NUMBER INDEX

STOCK NUMBER	FIG	ITEM	STOCK NUMBER	FIG	ITEM
5310-01-097-3611	38	19	5330-01-116-3602	22	3
5340-01-097-3948	24	7	5315-01-116-7602	32	8
5340-01-097-6905	38	23	5315-01-116-8149	6	17
5340-01-097-6906	38	23	3110-01-117-3524	7	19
3120-01-097-8992	32	21		8	21
	36	4	5365-01-117-3796	42	15
	37	8	5306-01-118-9557	37	11
	38	4	5306-01-118-9558	35	4
5306-01-099-0329	36	2	2530-01-126-3430	36	12
5315-01-099-0668	32	24		38	10
5340-01-100-7384	26	5	2590-01-131-3664	3	17
3120-01-102-7417	36	14	5340-01-132-1158	7	4
	38	11		8	4
5340-01-102-8291	26	22	5120-01-135-1060	31	7
5306-01-104-5885	22	14	3120-01-137-3985	36	17
5340-01-105-3041	43	1		38	12
4710-01-105-3042	35	1	5305-01-140-9118	14	1
5340-01-105-5013	10	7		15	2
4710-01-105-5014	37	10	2530-01-144-2911	36	11
5340-01-105-5015	35	14		38	8
	37	14	3120-01-145-1230	38	13
5306-01-105-5016	34	8	5330-01-155-3915	26	36
9905-01-105-5029	40	1	5935-01-160-1788	2	22
9905-01-105-5030	40	10		3	22
9905-01-105-5031	40	5	5307-01-172-2658	38	7
5340-01-105-6455	37	4	5340-01-173-3310	11	17
2520-01-106-9175	11	5	5306-01-178-9261	38	18
4730-01-109-7108	17	11	5935-01-184-7188	3	21
	18	13	4010-01-193-9331	6	23
4710-01-109-8428	44	12	5310-01-193-9726	41	23
4710-01-110-0047	44	20	5305-01-219-7171	38	33
7690-01-111-2265	40	15	5340-01-222-2482	44	32
5340-01-111-2845	38	41	9905-01-226-4592	40	23
4720-01-111-5632	43	7	3040-01-234-8892	13	15
5315-01-111-6810	32	23	5325-01-242-7083	2	15
9905-01-112-2246	40	9	2530-01-247-4637	35	1
3120-01-112-4442	35	5	2530-01-247-7966	13	6
5340-01-112-6430	35	14	6220-01-252-9283	4	5
	37	14	2540-01-255-7937	27	1
4010-01-114-0009	32	17	5340-01-256-0097	27	6
5306-01-114-0963	11	9	5305-01-257-3859	24	13
5315-01-114-9109	32	15	2530-01-258-2786	13	14
5315-01-114-9375	32	22	5340-01-261-0099	36	42
5315-01-115-3481	32	26	5330-01-265-2202	27	3
2540-01-115-8166	26	37	6220-01-284-2709	5	12
5315-01-116-2644	29	3	3040-01-285-6290	13	15
5310-01-116-3584	35	7	6220-01-297-3217	5	10
	36	7	2590-01-313-8021	26	19
	37	9	4820-01-333-0971	42	19
	38	16	6220-01-359-2870	5	2

CROSS-REFERENCE INDEXES

NATIONAL STOCK NUMBER INDEX

STOCK NUMBER	FIG	ITEM	STOCK NUMBER	FIG	ITEM
6220-01-372-3883	5	1			
6685-01-373-7976	45	1			
4320-01-379-1104	42	1			

CROSS-REFERENCE INDEXES

PART NUMBER INDEX

CAGEC	PART NUMBER	STOCK NUMBER	FIG	ITEM
78500	A-372-F-6	2530-01-258-2786	13	14
16662	AC2003D	5340-00-818-1735	19	5
16662	AC3105	5360-00-598-7048	21	6
16662	AD35779	2530-00-903-0466	20	12
26953	AJ100.001		41	12
88044	AN315-18L	5310-00-574-0436	8	12
81352	AN315-18R	5310-00-264-1243	8	15
88044	AN316-12R	5310-00-167-1309	7	12
88044	AN911-2K	4730-00-840-4289	44	14
88044	AN911-3J	4730-00-720-4620	21	29
88044	AN912-2K	4730-00-959-3816	44	10
88044	AN912-4J	4730-00-540-6146	21	21
88044	AN914-2K	4730-00-929-0610	44	5
88044	AN917-2K	4730-00-866-3147	44	13
88044	AN960-1616	5310-00-167-0828	32	36
26952	A1028.074		41	36
23705	A298322	4710-00-511-1692	16	5
78500	A3144W205	2530-00-752-1602	8	16
78500	A3144X206	2530-00-752-1601	8	10
78500	A3236L974	2530-00-752-1766	13	1
78500	A372G7	2530-00-391-1210	13	14
26952	A8000.066		41	34
26952	A8000.212		41	21
26952	A8001.057	5315-01-047-2784	41	5
26952	A8008.049		41	3
26952	A8009.037	5330-00-123-8671	41	7
26952	A8016.048		41	33
26952	A8017.048	5306-01-047-0318	41	42
26953	A8018.006		41	38
26952	A8018.021	4730-01-053-8749	41	8
26952	A8018.061	5315-01-046-7953	41	4
26952	A8019.061		41	6
26952	A8059.040		41	41
26953	A8087.900		41	39
81902	BSK5789	4720-00-902-3301	17	7
81902	BSK5791	4720-00-902-3303	20	3
05842	B1008-016	3110-00-812-7349	41	18
26952	B159-167	5330-00-759-7412	41	20
05842	B162-206	5360-00-765-1896	41	17
26952	B164.232		41	16
80204	B1821BH025C088N	5305-00-071-2505	6	32
			6	34
			11	30
80204	B1821BH025F100N	5305-00-068-0515	26	18
80204	B1821BH031C075N	5306-00-226-4825	10	9
80204	B1821BH031C200N	5306-00-226-4833	44	17
			44	40
80204	B1821BH031C425N	5306-00-226-4842	6	35
			9	14
			10	16
			10	17

CROSS-REFERENCE INDEXES

PART NUMBER INDEX

CAGEC	PART NUMBER	STOCK NUMBER	FIG.	ITEM
80204	B1821BH031C425N	5306-00-226-4842	11	16
80204	B1821BH038C063N	5305-00-721-5492	31	10
80204	B1821BH038C075D	5305-00-115-9526	5	14
			6	8
80204	B1821BH038C088N	5305-01-140-9118	14	1
			15	2
80204	B1821BH038C100L	5306-01-114-0963	11	9
80204	B1821BH038C125N	5305-00-068-0511	33	4
80204	B1821BH038C150N	5305-00-725-2317	15	8
80204	B1821BH038C200N	5305-00-782-9489	12	9
80204	B1821BH038F350N	5305-00-269-3248	32	30
80204	B1821BH044C250N	5305-00-071-2059	6	37
			9	16
80204	B1821BH050C150N	5305-00-071-2069	9	6
			10	3
			11	28
			37	6
80204	B1821BH050C175N	5305-00-071-2070	6	15
80204	B1821BH050C400N	5305-00-071-2079	6	18
80204	B1821BH050F175N	5305-00-719-5235	36	46
80204	B1821BH075C225N	5305-00-900-0576	38	40
80204	B1821BH075C325N	5305-00-947-4355	24	3
80204	B1821BH100C200L		6	3
80204	B1821BH100C450N	5305-00-932-3280	35	13
			38	14
82240	B1900-377	5340-00-821-0304	27	5
24835	B3373-31	2590-00-911-5287	32	2
26952	B8008.060	4320-01-044-7261	41	2
95745	CP13-10RP	5315-00-123-0002	42	5
95745	CP13-12	4320-00-122-4327	42	12
95745	CP13-13RP	4820-01-333-0971	42	19
95745	CP13-9	4320-00-122-0619	42	2
15434	C0505027400	4730-00-808-6814	32	2
26952	C8007-098	5340-01-044-9282	41	13
26952	C8031.005		41	27
26952	E14.16		41	26
87373	F381-1313-4-4-4X 46		44	39
87373	F381-1313-4-4-4X 85		44	38
63477	F4572	2530-00-312-1349	15	9
79497	G1895	5325-00-281-1557	3	15
26952	HP-6001-51-12	4320-00-172-1817	41	1
26952	H11.261		41	29
81718	H2525M	5310-00-637-9541	12	6
			14	2
			20	10
			21	26
			22	8
			27	17
			31	9

CROSS-REFERENCE INDEXES

PART NUMBER INDEX

CAGEC	PART NUMBER	STOCK NUMBER	FIG	ITEM
81718	H2525M	5310-00-637-9541	33	5
			34	5
26952	H6.199		41	31
26952	H613.183		41	24
05842	H7-900	1730-00-651-8476	41	28
26952	H8.010		41	30
76005	J-5864-102	5340-00-376-3039	28	10
26952	KH2000	4940-00-186-3199	KITS	
81349	MIL-W-83420		29	4
95745	MK1772-20		KITS	
95745	MK2179	4320-01-379-1104	42	1
96906	MS122088	5340-00-290-4503	24	18
96906	MS15570-1251	6240-00-019-0877	4	6
			4	10
			5	11
96906	MS15570-623	6240-00-019-3093	5	5
96906	MS15795-710	5310-00-543-2009	1	20
			2	24
96906	MS15795-814	5310-00-773-7618	13	13
96906	MS15968-15		36	43
96906	MS16228-16C	5310-00-245-8828	35	2
			36	16
			37	1
			38	2
96906	MS16228-4C	5310-00-245-8825	6	29
96906	MS16228-8C	5310-00-241-6667	6	20
			35	2
96906	MS16562-17	5315-00-993-4125	31	5
96906	MS16562-35	5315-00-814-3530	29	6
96906	MS16562-77	5315-00-844-5831	26	20
96906	MS16624-1225	5365-00-252-4770	25	6
96906	MS16625-1162	5365-00-804-2782	36	13
			38	9
96906	MS17795-135	3120-00-549-8098	32	25
			36	30
			38	21
96906	MS17795-141	3120-00-941-2259	6	21
96906	MS17829-12C	5310-00-519-6630	38	42
96906	MS17829-12F	5310-00-761-7673	37	22
			38	38
96906	MS17829-5C	5310-00-245-3424	21	16
96906	MS17830-4C	5310-00-241-6604	26	31
96906	MS17984-C1641	5315-00-902-0411	11	10
96906	MS17984-C616	5315-00-007-6103	28	22
96906	MS17984-C818	5315-00-252-9921	26	40
96906	MS17984C421	5340-00-904-1670	11	3
96906	MS17984C429	5340-01-173-3310	11	17
96906	MS17990C1248		36	49
96906	MS19059-2416	3110-00-100-6153	42	14
96906	MS19081-112	3110-00-100-5951	22	17
96906	MS20257C6-2600		26	12

CROSS-REFERENCE INDEXES

PART NUMBER INDEX

CAGEC	PART NUMBER	STOCK NUMBER	FIG	ITEM
96906	MS20257C6-4400		26	32
96906	MS20257C6-7200	5340-00-835-6336	BULK	5
96906	MS20392-12C73	5315-00-889-2545	32	34
96906	MS20392-7C91	5315-00-802-0240	26	24
96906	MS20426AD8-10	5320-00-117-7522	26	11
96906	MS20426AD8-8		26	33
96906	MS20426A4-7	5320-00-543-3680	27	8
96906	MS20426A6-9	5320-00-855-2185	27	9
96906	MS20470A4-6	5320-00-721-5211	27	4
96906	MS20995N51	9525-00-618-5462	BULK	10
96906	MS20995N51-6		7	1
			8	1
96906	MS21044-N8	5310-00-877-5795	36	19
			38	26
96906	MS21044N6	5310-00-950-0039	32	33
96906	MS21083C3	5310-00-926-1835	26	16
96906	MS21083N04	5310-00-925-9645	26	6
96906	MS21094-4004	5306-00-884-8947	27	15
96906	MS21104D10	5340-00-721-8015	17	18
96906	MS21318-19	5305-00-840-5938	40	3
96906	MS21318-21	5305-00-253-5615	40	17
96906	MS21318-29	5305-00-253-5620	40	2
96906	MS21318-35	5305-00-951-2437	36	47
96906	MS21919DG8	5340-00-598-0597	3	28
96906	MS21919WDG10	5340-00-584-6556	21	1
96906	MS21919WDG8	5340-00-291-5347	2	28
			17	3
			18	3
96906	MS24629-38	5305-00-855-0965	28	19
96906	MS24665-283	5315-00-842-3044	13	11
96906	MS24665-355	5315-00-012-0123	31	13
			32	14
96906	MS24665-359	5315-00-013-7214	8	17
96906	MS24665-423	5315-00-013-7228	32	37
96906	MS24665-629	5315-00-234-1848	28	6
96906	MS25036-106	5940-00-283-5280	1	11
96906	MS25043-16C		2	21
96906	MS25043-16DA	5935-01-184-7188	3	21
96906	MS27183-10	5310-00-809-4058	26	28
			27	14
96906	MS27183-12	5310-00-081-4219	21	15
			32	16
			38	31
96906	MS27183-14	5310-00-080-6004	20	9
			21	25
96906	MS27183-15	5310-00-809-4061	31	8
96906	MS27183-18	5310-00-809-5998	26	25
			36	45
96906	MS27183-19	5310-00-809-3079	34	10
96906	MS27183-21	5310-00-823-8803	34	6
96906	MS27183-23	5310-00-809-8533	24	12

CROSS-REFERENCE INDEXES

PART NUMBER INDEX

CAGEC	PART NUMBER	STOCK NUMBER	FIG	ITEM
96906	MS27183-23	5310-00-809-8533	32	27
			38	37
96906	MS27183-24	5310-00-809-8536	31	11
96906	MS27183-27	5310-00-809-8541	32	10
			32	13
			35	3
			36	15
			37	7
			38	3
96906	MS27183-28	5310-00-982-6562	35	11
			37	17
96906	MS29513-121	5330-00-337-8593	36	38
96906	MS3452W16-10S	5935-01-160-1788	2	22
			3	22
96906	MS35190-304	5305-00-958-5252	10	6
96906	MS35206-212	5305-00-993-0191	40	6
96906	MS35206-243	5305-00-984-6191	28	18
96906	MS35206-262	5305-00-984-6209	27	11
96906	MS35206-280	5305-00-988-1724	39	1
96906	MS35206-281	5305-00-988-1725	26	43
96906	MS35206-283	5305-00-988-1727	32	19
96906	MS35207-264	5305-00-989-7435	2	27
			3	27
			11	11
			17	1
			18	1
			21	2
			24	9
			26	38
			40	14
96906	MS35207-268	5305-00-995-3442	17	19
96906	MS35265-93	5305-00-573-7897	7	2
96906	MS35265-94	5305-00-551-5097	8	2
96906	MS35291-061	5305-00-543-2419	34	4
96906	MS35333-35	5310-00-579-5554	7	23
96906	MS35335-35	5310-00-627-6128	4	8
			8	25
			9	12
			10	14
			11	20
96906	MS35338-136	5310-00-929-6395	1	7
			2	10
			3	10
96906	MS35338-139	5310-00-933-8121	1	18
			2	3
			2	23
			3	3
			31	3
			39	2
96906	MS35338-140	5310-00-974-6623	1	16
96906	MS35338-40	5310-00-543-2410	2	19

CROSS-REFERENCE INDEXES

PART NUMBER INDEX

CAGEC	PART NUMBER	STOCK NUMBER	FIG	ITEM
96906	MS35338-40	5310-00-543-2410	3	19
96906	MS35338-42	5310-00-045-3299	28	17
96906	MS35338-43	5310-00-045-3296	2	26
			3	26
			17	2
			18	2
			21	9
			24	17
			27	12
			40	13
96906	MS35338-44	5310-00-582-5965	6	31
			11	29
			21	28
			26	42
			32	20
			36	40
96906	MS35338-45	5310-00-407-9566	6	5
			7	3
			8	3
			9	3
			10	8
			11	7
			13	24
			17	5
			18	5
			19	9
			28	13
			38	32
			41	45
			44	8
96906	MS35338-46	5310-00-637-9541	6	9
			15	1
			15	6
96906	MS35338-47	5310-00-209-0965	6	38
			10	18
			11	14
96906	MS35338-48	5310-00-584-5272	9	5
			10	4
			11	27
			28	9
			34	11
			36	29
		5310-00-003-4094	36	44
		5310-00-584-5272	37	5
96906	MS35338-51	5310-00-584-7888	7	14
			13	21
			24	4
			24	14
96906	MS35338-54	5310-00-850-1611	5	13
96906	MS35340-44	5310-00-682-5930	26	29
96906	MS35387-1	9905-00-205-2795	39	3

CROSS-REFERENCE INDEXES

PART NUMBER INDEX

CAGEC	PART NUMBER	STOCK NUMBER	FIG	ITEM
96906	MS35387-2	9905-00-202-3639	39	4
96906	MS35478-1683	6240-00-044-6914	4	3
			5	4
96906	MS35489-17	5325-01-242-7083	2	15
96906	MS35489-72	5325-00-249-6352	6	13
96906	MS35649-202	5310-00-934-9758	27	13
96906	MS35649-242	5310-00-934-9739	2	14
			3	14
96906	MS35690-404	5310-00-723-4458	11	24
96906	MS35690-627	5310-00-082-1679	8	26
96906	MS35691-10	5310-00-931-3175	6	6
			9	4
			10	11
			11	22
96906	MS35691-13	5310-00-853-9335	12	3
96906	MS35691-18	5310-00-891-1754	12	7
96906	MS35691-5	5310-00-971-7989	42	18
96906	MS35691-53	5310-00-835-2037	17	8
			18	9
96906	MS35692-21	5310-00-842-1488	13	12
96906	MS35692-69	5310-00-835-2140	8	14
79146	MS35746-1	4730-00-595-0083	20	1
			21	7
96906	MS35782-2	4820-00-720-4488	20	14
96906	MS35782-3	4820-00-174-0339	21	20
96906	MS35842-11	4730-00-908-3194	16	4
96906	MS35842-13	4730-00-909-8627	32	5
96906	MS35842-15	4730-00-908-6293	32	3
96906	MS39230-2	4730-00-253-4412	20	4
96906	MS500083A040280	4720-01-111-5632	43	7
96906	MS500083A040360	4720-01-031-3294	43	2
96906	MS500083A040580	4720-01-031-3293	43	9
96906	MS51095-324	5305-01-219-7171	38	33
96906	MS51329-1	6220-00-669-5623	4	1
96906	MS51329-23	6220-01-252-9283	4	5
96906	MS51337-1	2540-00-054-7702	28	5
96906	MS51500A4-4S	4730-00-837-7073	43	5
96906	MS51512A4S		43	8
96906	MS51575-16		24	16
96906	MS51819-5SS	4730-00-720-2007	44	11
96906	MS51937-1C		26	35
96906	MS51953-101	4730-00-196-1505	20	13
96906	MS51957-16	5305-00-054-5650	2	20
			3	20
96906	MS51957-30	5305-00-054-6654	1	6
			2	9
			3	9
96906	MS51957-81	5305-00-082-6721	1	19
			1	21
			2	2
			2	25

CROSS-REFERENCE INDEXES

PART NUMBER INDEX

CAGEC	PART NUMBER	STOCK NUMBER	FIG	ITEM
96906	MS51957-81	5305-00-082-6721	3	2
			3	23
96906	MS51957-83	5305-00-071-1318	26	15
96906	MS51957-96	5305-00-051-0837	1	17
96906	MS51959-46	5305-00-764-0070	4	13
96906	MS51960-66	5305-00-071-1323	26	13
96906	MS51960-88	5305-00-719-5124	26	3
96906	MS51964-124	5305-01-025-9980	30	4
96906	MS51967-2	5310-00-761-6882	26	30
96906	MS51967-20	5310-00-763-8920	34	1
96906	MS51967-23	5310-00-763-8921	24	11
96906	MS51967-29	5310-00-762-6248	6	2
96906	MS51967-5	5310-00-880-7744	44	9
96906	MS51967-8	5310-00-732-0558	20	11
			27	18
			28	8
96906	MS51968-14	5310-00-732-0560	28	8
			34	12
96906	MS51968-15	5310-00-943-2141	28	23
96906	MS51968-17	5310-00-763-8911	7	22
			8	24
96906	MS51968-23	5310-00-763-8901	7	15
			13	22
96906	MS51968-5	5310-00-880-7746	13	23
			41	46
96906	MS51968-8	5310-00-732-0559	22	7
96906	MS51968-9	5310-00-785-1762	7	24
			9	13
			10	15
			11	21
96906	MS51971-1	5310-00-903-5966	1	10
			2	11
			3	11
96906	MS51971-2	5310-00-767-0445	1	12
96906	MS51983-1	5310-00-518-5566	22	6
96906	MS51983-2	5310-00-594-8038	22	6
96906	MS51992-13		17	17
96906	MS52000-5	5330-00-946-8344	2	18
			3	18
96906	MS521301A204R	4720-00-489-5350	16	3
96906	MS53004-2	2530-00-021-2366	20	7
			21	13
96906	MS53044-5	2530-00-026-0265	22	18
96906	MS53045-3	2530-00-738-9061	22	20
96906	MS53047-1	6220-00-500-0437	4	2
96906	MS75021-1	5935-00-846-3883	1	3
			2	5
			3	5
96906	MS90725-236	5305-00-969-3142	37	3
96906	MS90725-242	5305-00-921-0927	37	15
96906	MS90725-31	5306-00-225-8496	11	6

CROSS-REFERENCE INDEXES

PART NUMBER INDEX

CAGEC	PART NUMBER	STOCK NUMBER	FIG	ITEM
96906	MS90725-31	5306-00-225-8496	19	8
			22	1
			32	18
96906	MS90725-33	5306-00-225-8498	6	12
			44	15
96906	MS90725-36	5306-01-075-8519	21	14
			44	18
96906	MS90725-6	5305-00-068-0502	6	32
			31	4
96906	MS90725-60	5305-00-269-3211	4	7
			20	8
			21	24
			27	16
96906	MS90725-95	5305-00-069-5579	6	37
			11	15
96906	MS90726-29	5306-00-225-9084	4	14
			17	6
			18	4
96906	MS90726-31	5306-00-225-9086	28	12
96906	MS90726-33	5306-00-225-9088	17	16
96906	MS90726-36	5305-00-225-9091	41	44
96906	MS90726-61	5305-00-269-2804	6	14
			15	2
96906	MS90727-111	5305-00-719-5219	28	11
80204	MS90727-116		28	3
96906	MS90727-32	5306-00-050-1238	12	12
96906	MS90728=8	5305-00-225-3843	21	27
96906	MS9245-65	5315-00-926-5767	32	28
96906	MS9245-68	5315-00-940-9468	32	9
09990	MV400S	4820-00-404-6071	44	31
81349	M13486-1-5	6145-00-152-6499	BULK	9
81349	M13486-1-5-8		1	13
81349	M25995B3FC020	4710-00-383-3450	BULK	7
81349	M83420/3-004	4010-00-082-5963	25	2
			32	6
72413	NAD11331-2	2510-00-903-0492	33	1
05643	NP5041033	4730-00-350-8600	21	18
40342	N10790B	9905-00-831-0208	21	4
40342	N10790C	9905-00-685-6540	21	5
95745	P1-12RP	4320-00-125-3208	42	13
95745	P1-17		42	8
95745	P1-18		42	9
95745	P1-19		42	10
95745	P1-20	5330-00-461-7408	42	11
95745	P1-6		42	7
95745	P1-7		42	6
60960	P100-12	3120-00-903-0464	6	27
26952	P146.118		41	10
05842	P146.75		41	9
07505	P146-161	5330-00-377-5503	41	14
26952	P146-50		41	40

CROSS-REFERENCE INDEXES

PART NUMBER INDEX

CAGEC	PART NUMBER	STOCK NUMBER	FIG	ITEM
26952	P307.18		41	37
26952	P307.190		41	19
07505	P307.900	4820-00-349-8952	41	15
26952	P307-186		41	22
07505	P60-11	5340-00-371-6507	41	32
26952	P6012	3040-00-996-7209	41	35
81348	QQ-A-250/8	9535-00-232-6874	BULK	8
53551	RV250-4-2	5320-00-582-3298	40	21
81495	S-738-11	4730-00-202-6491	20	5
18034	SS-4FW2-15		44	25
81348	WW-P-471BDQBDEC	4730-01-052-8253	42	4
26953	W12.16		41	25
09990	002118-6	5340-01-222-2482	44	32
72582	0112877	4730-00-014-1539	43	6
88233	03080-0020	4730-00-800-7569	20	16
30780	1-4-1-8PTRSS	4730-00-014-1539	45	2
30780	1/4 X 2.0 FFF		44	35
60380	10SF16-TT	3120-01-102-7417	36	14
17875	100AA	2640-00-050-1229	23	3
24617	103374	5315-00-816-1794	26	23
21699	10741-14-28	5310-00-582-5677	3	24
19207	10896681	5315-00-451-1047	13	18
19207	10896683	5330-00-168-5673	13	16
19207	10896684	5330-00-891-7826	22	16
19207	10896689	5306-00-177-5278	22	13
19207	10896696	2530-00-288-2986	22	10
19207	10896705	5307-00-463-4558	7	8
			8	8
19207	10896708	2530-00-176-7859	22	11
19207	10896709	5310-00-252-2130	13	10
19207	10896712	5310-01-006-8845	13	17
19207	10896714	4730-01-109-7108	17	11
			18	13
19207	10896716	5360-00-813-7813	13	2
19207	10896719-1	5306-01-104-5885	22	14
19207	10896719-2	5306-00-170-0141	22	14
19207	10896731	5330-01-116-3602	22	3
19207	10896733	5340-00-134-5121	22	9
19207	10922126		28	16
19207	10947252	4010-00-903-0463	28	20
			36	48
19207	10947273	5340-00-111-5534	35	6
			36	3
			37	2
			38	5
19207	10947368	3120-00-541-9862	7	11
19207	10947381	2590-00-903-0465	31	1
19207	10947382	2510-00-903-0487	34	13
19207	10947411	5306-00-902-3236	24	1
19207	10947430	4730-00-279-0133	20	15
19207	10947438-1	4720-00-903-0462	20	17

CROSS-REFERENCE INDEXES

PART NUMBER INDEX

CAGEC	PART NUMBER	STOCK NUMBER	FIG	ITEM
19207	10947438-18	4720-00-600-9140	21	17
19207	10947438-2	4720-00-902-3303	21	10
19207	10947438-20	4720-00-600-9036	21	12
19207	10947438-3	4720-00-902-3301	18	7
19207	10947438-4	4720-00-454-8619	17	9
			18	8
19207	10947438-5	4720-00-902-3302	17	15
			18	14
19207	10947438-6	4720-00-454-8618	20	6
19207	10947438-7	4720-00-600-9042	17	10
			18	15
19207	10947438/1	4720-00-903-0462	21	30
19207	10947448	5365-01-054-5062	12	5
19207	10947450		12	10
19207	10947463-1	3040-01-234-8892	13	15
19207	10947463-2	3040-01-285-6290	13	15
19207	10947468	2530-00-909-3785	7	6
19207	10947470	3110-01-117-3524	7	19
			8	21
19207	10947472-1	5310-01-097-3609	7	17
			8	19
19207	10947472-2	5310-01-097-3610	7	18
			8	20
19207	10947472-3	5365-01-095-9714	7	16
			8	18
19207	10947473	5340-01-132-1158	7	4
			8	4
19207	10947475		7	21
			8	23
19207	10947477	3120-00-107-1545	7	6
			8	7
19207	10947478	5306-00-625-3241	9	11
			10	13
			11	19
19207	10947479	5340-01-050-5802	12	2
19207	10947480	5340-01-055-8299	12	11
19207	10947481	2990-00-903-0490	12	1
19207	10947482		13	1
19207	10947484	5306-00-625-3222	13	19
19207	10947485	5325-00-903-0491	13	20
19207	10948079	3110-00-087-9881	22	19
19207	10948145	5120-01-135-1060	31	7
18876	11031078-1	9905-00-955-0536	41	11
78500	1107278		8	11
19207	11153758-3		11	4
19207	11588257	5306-00-902-3235	7	9
19207	11588258		6	36
			9	15
			10	19
			11	13
19207	11588259	3110-00-902-3306	6	4

CROSS-REFERENCE INDEXES

PART NUMBER INDEX

CAGEC	PART NUMBER	STOCK NUMBER	FIG	ITEM
19207	11588259		9	2
		3110-00-902-3306	10	10
			11	12
19207	11588261	5340-01-105-6455	37	4
19207	11588262-1		34	14
19207	11588263		31	12
19207	11588264	5307-00-902-3407	34	8
19207	11588265	5306-01-042-2777	35	16
			36	33
			37	12
			38	22
19207	11588266-2		35	4
19207	11588266-3	5306-01-178-9261	38	18
19207	11588266-4	5307-01-172-2658	38	7
19207	11588267		35	8
19207	11588267-1		38	17
19207	11588268	3120-00-107-1554	35	5
			37	8
19207	11588269	5310-01-097-3611	35	15
			36	31
			37	13
			38	19
19207	11588271		28	15
19207	11588272		28	4
19207	11588273	2540-00-177-8299	28	1
19207	11588274	3040-00-177-8122	6	26
19207	11588275		37	10
19207	11588276	5120-00-902-3298	24	2
19207	11588277	3040-01-068-1085	37	21
19207	11588280		9	1
19207	11588281-1	5340-00-147-5281	34	3
19207	11588281-2	2540-00-147-5282	34	3
19207	11588282	2530-01-052-9384	6	7
			9	8
			10	5
19207	11588283-1		37	14
19207	11588283-2	5340-01-112-6430	35	14
			37	14
19207	11588283-3		35	14
19207	11588291	2530-01-247-4637	35	1
19207	11588295		24	5
19207	11588296	2530-01-044-3792	7	10
19207	11588302	5340-01-043-8193	9	7
19207	11588303	2530-00-902-3311	35	9
19207	11588306	2530-00-902-3312	37	19
19207	11588307	5365-01-045-3435	35	12
			36	10
			37	16
19207	11588308	6230-01-038-8293	9	9
19207	11588309		6	11
19207	11588314	5315-00-797-5999	6	10

CROSS-REFERENCE INDEXES

PART NUMBER INDEX

CAGEC	PART NUMBER	STOCK NUMBER	FIG	ITEM
19207	11588315-2		1	9
			2	12
19207	11588315-5		3	12
19207	11588316		2	8
			3	8
19207	11588317		1	14
19207	11588318	6110-00-902-3230	2	1
19207	11588320	6110-00-014-6259	1	1
19207	11588326	5306-00-902-3238	37	20
			38	36
19207	11588327	9905-00-905-5980	40	4
19207	11588328	9905-00-905-8253	40	10
19207	11588329	9905-00-905-8726	40	9
19207	11588330		40	7
19207	11588331		40	12
19207	11588332		40	8
19207	11588333	9905-00-905-8252	40	1
19207	11588334	5365-00-177-8283	6	22
19207	11588334-1	5365-01-054-8825	6	22
19207	11588335		6	16
19207	11588336		31	2
19207	11588347	6150-00-902-3313	2	17
19207	11588350	5306-00-902-3233	24	15
19207	11588351-1		24	13
19207	11588352-4	5340-01-097-3948	24	7
19207	11588358	5310-01-116-3584	35	7
			36	7
			37	9
			38	16
19207	11588359		6	30
19207	11588360		6	33
19207	11588364	9905-00-235-4446	40	11
19207	11601758	2640-00-596-3985	33	2
19207	11602350-3	5315-00-165-8480	32	11
19207	11602353	4820-01-026-9997	43	4
19207	11602356-1	5315-01-114-9109	32	15
19207	11612100	9905-01-053-8856	40	18
19207	11612101		40	16
19207	11612168		25	5
19207	11612169	2530-01-040-4208	25	3
19207	11612186		25	7
19207	11612194-3	5315-00-125-6779	28	21
19207	11612194-4	5315-01-091-1636	28	21
19207	11612205	2530-00-600-9158	41	43
19207	11612205-1	6680-01-092-4058	42	3
19207	11612329-2		25	4
19207	11631730		40	10
19207	11639519-2	5330-00-462-0907	5	3
19207	11647930		6	19
19207	11647930-1		6	19
19207	11647932	5306-01-091-1637	6	25

CROSS-REFERENCE INDEXES

PART NUMBER INDEX

CAGEC	PART NUMBER	STOCK NUMBER	FIG	ITEM
19207	11647932-1	2530-01-091-1638	6	25
19207	11647945	9905-00-151-5599	40	4
19207	11647949	9905-01-112-2246	40	9
19207	11647950	2530-01-040-4990	10	1
19207	11647952	3120-01-097-8992	32	21
			36	4
			37	8
			38	4
19207	11647952-1		38	15
			BILK	2
19207	11647952-2		38	6
19207	11648942	2590-01-313-8021	26	19
19207	11649028		11	23
19207	11649031		26	1
19207	11649032	2540-01-115-8166	26	37
19207	11649033		26	2
19207	11649034		32	35
19207	11649035		32	31
19207	11649036	5306-01-099-0329	36	2
19207	11649039	2510-00-103-2090	36	1
19207	11649042-1		36	9
19207	11649042-2		36	5
19207	11649042-3		36	8
19207	11649042-4		36	32
			38	20
19207	11649042-5		36	6
19207	11649044	5315-01-099-0668	32	24
19207	11649045	2590-01-036-6759	32	29
19207	11649046	5307-01-040-4612	34	8
19207	11649047	2530-00-103-2162	11	1
19207	11649049	2520-01-106-9175	11	5
19207	11649056	2510-00-103-2091	38	1
19207	11649065	2530-01-091-1639	38	39
19207	11649068		6	11
19207	11649069	9905-01-091-1647	40	1
19207	11649070	9905-01-091-1648	40	9
19207	11649071	5340-01-091-1640	26	41
19207	11649072	5305-00-625-3258	36	18
19207	11649073	4010-01-006-4585	11	2
			26	39
19207	11649076		40	7
19207	11649077		40	8
19207	11649078	5330-01-155-3915	26	36
19207	11649079	2590-01-091-1641	24	10
19207	11649080-3	5340-01-097-6905	38	23
19207	11649080-4	5340-01-097-6906	38	23
19207	11649081-3	5340-01-091-1642	36	34
19207	11649081-4	5340-01-091-1643	36	34
19207	11649082-1	2530-01-092-4060	6	7
			11	26
19207	11649090		30	2

CROSS-REFERENCE INDEXES

PART NUMBER INDEX

CAGEC	PART NUMBER	STOCK NUMBER	FIG	ITEM
19207	11649094	5340-01-111-2845	38	41
19207	11649095	9905-01-091-1649	40	4
19207	11649097	5315-01-111-6810	32	23
19207	11649106		3	25
19207	11649116		26	4
19207	11649117	5340-01-100-7384	26	5
19207	11649118		26	10
19207	11649120		26	27
19207	11649121	2590-01-091-1644	26	21
19207	11649123	5340-01-102-8291	26	22
19207	11649127		26	17
19207	11649128	5340-01-091-1645	26	26
19207	11649130-2	4010-01-114-0009	32	17
19207	11649131	5315-01-096-7425	32	12
19207	11649134-1	4720-00-600-9141	44	4
19207	11649134-2	4720-00-600-9153	44	19
19207	11649134-3	4720-00-600-9156	44	21
19207	11649135	3040-01-027-6191	6	28
19207	11649136	2530-01-027-0201	8	6
19207	11649137	2530-00-103-2203	8	9
19207	11649138	2530-01-027-6944	8	13
19207	11652335	3040-00-076-8670	32	1
19207	11652356		29	5
19207	11652362		27	10
19207	11652363	5340-01-256-0097	27	6
19207	11652365-2	5330-01-265-2202	27	3
19207	11652374		29	7
19207	11652377		32	35
19207	11652378		32	31
19207	11652381	5340-01-031-4452	32	32
19207	11652384		29	8
19207	11652386		29	9
19207	11652388		27	2
19207	11652389-1	5315-01-115-3481	32	26
19207	11652389-2	5315-01-114-9375	32	22
19207	11652398	2590-01-036-6758	32	29
19207	11652399	2530-01-027-0200	29	1
19207	11652401	2540-01-255-7937	27	1
19207	11652403		27	19
19207	11652418	4710-01-105-5014	37	10
19207	11652419	4710-01-105-3042	35	1
19207	11652424	5340-01-105-5013	10	7
19207	11652425	5340-01-105-3041	43	1
19207	11652428-1	5306-01-118-9557	37	11
19207	11652428-2	5306-01-118-9558	35	4
19207	11652431		6	11
19207	11652432	3120-01-112-4442	35	5
19207	11652442		27	7
19207	11652443	5315-01-116-7602	32	8
19207	11652445	5340-01-105-5015	35	14
			37	14

CROSS-REFERENCE INDEXES

PART NUMBER INDEX

CAGEC	PART NUMBER	STOCK NUMBER	FIG	ITEM
19207	11652456	5306-01-105-5016	34	8
19207	11652457		34	9
19207	11652460		7	13
19207	11652467		40	8
19207	11652468		40	7
19207	11652469	9905-01-105-5030	40	10
19207	11652470	9905-01-105-5031	40	5
19207	11652471	9905-01-105-5029	40	1
19207	11669139	5340-01-047-7486	6	24
19207	11674973-1	5330-01-095-5754	17	12
			18	11
19207	11674973-2	5330-01-095-5755	17	13
			18	12
19207	11682066	5995-00-088-4273	2	17
19207	11682066-1	2590-01-131-3664	3	17
19207	11682067	6220-01-038-8292	10	2
			11	25
			BULK	1
19207	11682068	6110-01-050-5791	2	1
19207	11682068-1	6110-00-103-2092	3	1
19207	11682374		30	6
19207	11682378	2530-00-106-5334	21	19
19207	11682381		21	23
21450	120145	4730-00-253-5757	21	11
19207	12250119		30	5
19207	12250218	9905-01-091-1650	40	5
19207	12250222	3040-01-035-5014	32	1
19207	12250223	4820-01-046-3532	42	16
19207	12250225	5307-01-048-6482	42	17
19207	12250230		30	3
19207	12250245	2530-01-091-1646	30	1
19207	12250289	4320-01-039-3988	42	1
19207	12255117	5365-01-033-9389	44	7
19207	12255118	5340-01-039-4177	44	16
19207	12255119	5340-01-024-6707	11	8
19207	12255284	2530-01-044-5313	6	1
19207	12255285	5315-01-052-8994	6	10
19207	12255286		28	15
19207	12255287	2540-01-038-8294	28	1
19207	12255293	2530-01-050-6876	6	28
19207	12259397	5365-01-044-3503	36	21
			38	24
19207	12259398	5310-01-044-0776	36	20
			38	25
19207	12259399-1		36	25
19207	12259399-2	5306-01-048-9970	38	27
19207	12259402-1	5365-01-050-6346	36	27
19207	12259402-2	5365-01-050-6347	38	34
19207	12259403	2530-01-038-1767	36	26
19207	12259404	5340-01-038-1765	36	28
19207	12259405	2530-01-038-1766	38	29

CROSS-REFERENCE INDEXES

PART NUMBER INDEX

CAGEC	PART NUMBER	STOCK NUMBER	FIG	ITEM
19207	12259406	5340-01-041-4908	38	30
19207	12259512-1	4710-01-049-5821	38	28
19207	12259512-2		36	23
19207	12259518	4710-01-110-0047	44	20
19207	12259601	4710-01-109-8428	44	12
19207	12259624	5306-01-053-1879	36	22
19207	12259625		36	24
19207	12259627	5340-01-055-4164	38	35
19207	12269866	5340-01-063-8997	24	8
78500	1229G969	5310-00-752-1650	22	21
19207	12296556	5365-01-117-3796	42	15
19207	12302516	7690-01-111-2265	40	15
19207	12312955	2530-01-144-2911	36	11
			38	8
19207	12312956-1	3120-01-137-3985	36	17
			38	12
19207	12312956-2	3120-01-145-1230	38	13
19207	12312968	2530-01-126-3430	36	12
			38	10
19207	12313026	5305-01-257-3859	24	13
19207	12331681		26	8
19207	12331681-2		26	7
19207	12331681-3		26	9
19207	12354228	9905-01-226-4592	40	23
19207	12355972		40	25
19207	12360850-1	6220-01-284-2709	5	12
19207	12360870-2	6220-01-297-3217	5	10
19207	12375837	6220-01-372-3883	5	1
19207	12375838		5	9
19207	12375841	6220-01-359-2870	5	2
19207	12436720-2		36	35
19207	12436724		36	36
19207	12436730		36	39
19207	12436731		36	37
19207	12436733		36	41
19207	12436739		28	2
19207	12436749		28	4
19207	12436750		28	15
19207	12436799		6	11
19207	12436800		11	8
19207	12440374		40	24
19207	12440377		26	14
19207	12440378		26	34
19207	12440383		42	4
19207	12440384		44	29
19207	12440390		44	22
19207	12440394		44	41
19207	12440395		44	28
19207	12440397		32	4
19207	12440402		6	1
19207	12440403		8	6

CROSS-REFERENCE INDEXES

PART NUMBER INDEX

CAGEC	PART NUMBER	STOCK NUMBER	FIG	ITEM
19207	12440404		26	1
19207	12440405		40	20
19207	12440406		26	17
19207	12440407		40	19
19207	12440429		40	22
19207	12440430		28	1
19207	12440436		40	5
19207	12440437		40	9
19207	12441072		40	10
61349	151469	6685-01-373-7976	45	1
13499	152-1757-00	5970-00-682-8744	BULK	6
78500	1745B2	2530-00-753-9270	14	4
52793	18151		31	6
43999	2W2SP-33-22-62	5310-01-193-9726	41	23
06853	212227	2530-00-545-5406	28	14
06853	213630	5330-00-090-2128	20	2
			21	8
78500	2208M377	5330-00-334-4224	7	5
			8	5
23862	2289994	2610-00-269-7383	23	2
18108	23-7123	3120-01-102-7417	38	11
80045	23MS35338-50	5310-00-820-6653	34	2
81902	24482P1	5306-00-902-3405	37	11
49956	267-1012P17		2	16
			3	16
78500	3101M91	2530-00-903-0489	7	20
			8	22
78500	3262H86	2530-00-026-0255	22	2
81902	33048	2540-00-815-6098	24	6
81343	4-4 140237C		44	36
81343	4-4 140238C	4730-00-817-1843	44	26
81343	4-4 140239C	4730-00-035-8036	44	24
			44	30
			44	37
81343	4-4-4 140424C	4730-00-177-6166	44	34
24617	444029	4730-00-278-3912	43	3
			44	2
21450	444618	4730-00-089-2515	21	22
24617	451358	5310-00-045-1358	28	7
09990	454001		44	33
16128	4960205	5340-01-261-0099	36	42
81337	5-4-4783	4030-00-431-5536	29	2
			32	7
19207	5160323	5310-00-209-1761	14	9
19207	5160337	5310-00-516-0337	13	9
63477	5167157	4730-00-659-7769	17	4
			18	6
19207	5167419	4730-00-516-7419	14	10
			17	14
			18	10
19207	5214539	5310-00-275-6635	14	7

CROSS-REFERENCE INDEXES

PART NUMBER INDEX

CAGEC	PART NUMBER	STOCK NUMBER	FIG	ITEM
19207	5706702	2530-01-247-7966	13	6
19204	572929	5999-00-057-2929	5	8
80535	577-0615	4010-01-193-9331	6	23
34558	5922	5330-00-359-0442	16	2
73331	5942528	5330-00-678-9047	4	11
81337	6-1-5876	8315-00-106-5973	BULK	4
81343	6-4 140140C	4730-00-278-3912	44	23
			44	27
08588	600R	2640-00-060-3550	23	4
12603	620235	4730-00-278-5812	14	8
19207	7320658	5330-00-297-7106	4	4
19207	7339466	5365-00-275-4519	34	7
19207	7357975-1	5315-01-116-2644	29	3
19207	7372762	2530-00-030-1408	14	3
19207	7373260	2530-00-737-3260	14	6
19207	7409366	5340-00-740-9366	12	4
19207	7409618	5365-00-740-9618	35	10
			37	18
19207	7411010	2530-00-274-4511	14	5
19207	7411017	5360-00-741-1017	13	5
19207	7521633	5310-00-752-1633	22	4
19207	7521636	2530-00-026-3916	22	12
19207	7521654	2530-00-752-1654	22	15
19207	7525965	5330-00-576-4609	1	5
			2	7
			3	7
19207	7529053	2530-00-193-8187	22	5
19207	7529054	2530-00-193-8183	22	5
12339	76D05086	5935-01-038-9629	1	15
19207	7722333	5365-00-090-5426	1	4
			2	6
			3	6
19207	7723309	5310-00-393-6685	1	8
			2	13
			3	13
19207	7731428	5935-00-773-1428	1	2
			2	4
			3	4
63477	7979691	4730-00-773-2163	16	1
18876	8017004	1450-00-337-8662	15	3
19207	8017005	2530-00-715-7662	15	4
19207	8017031	5340-01-051-3592	15	5
18876	8017063	5330-00-778-0454	19	2
18876	8017069		19	7
18876	8017072	5360-00-321-6462	19	6
19207	8017079	2530-00-671-4783	15	7
18876	8017082		19	4
18876	8017174	5330-00-778-0451	19	3
18876	8017234		19	1
19207	8331242		13	7
19207	8331243	5306-00-437-8765	13	8

CROSS-REFERENCE INDEXES

PART NUMBER INDEX

CAGEC	PART NUMBER	STOCK NUMBER	FIG	ITEM
19207	8331244	5310-00-529-6514	13	3
19207	8331245	5310-00-264-4086	13	4
19207	8332057	2530-00-319-6001	KITS	
19207	8338566	5935-00-572-9180	5	6
19207	8338567	5310-00-833-8567	5	7
19207	8376442	4820-00-242-4064	33	3
19207	8395403	4730-00-116-6769	43	10
			44	1
18876	8527586	4010-00-720-4591	BULK	3
19207	8537648	4030-00-431-5536	25	1
19207	8713987	4730-00-090-9252	44	3
19207	8720578	5315-01-116-8149	6	17
19207	8720578-2	5315-01-020-0770	6	17
19207	8741645	6220-00-846-9745	4	9
19207	8741646	6220-00-775-2384	4	12
19207	8744235	4820-01-048-3665	44	6
19207	8757687-1	2530-00-015-8245	7	25
			8	27
			9	10
			10	12
			11	18
			E-11	15.1
81348	9.00-20/D/TBCC	2610-00-262-8677	23	1
19207	909274	2530-00-918-6211	12	8

CROSS-REFERENCE INDEXES

FIGURE AND ITEM NUMBER INDEX

FIG	ITEM	STOCK NUMBER	CAGEC	PART NUMBER
BULK	1	6220-01-038-8292	19207	11682067
BULK	2		19207	11647952-1
BULK	3	4010-00-720-4591	18786	8527586
BULK	4	8315-00-106-5973	81337	6-1-5876
BULK	5	5340-00-835-6336	96906	MS20257C6-7200
BULK	6	5970-00-682-8744	13499	152-1757-00
BULK	7	4710-00-383-3450	81349	M25995B3FC020
BULK	8	9535-00-232-6874	81348	QQ-A-250/8
BULK	9	6145-00-152-6499	81349	M13486-1-5
BULK	10	9525-00-618-5462	96906	MS20995N51
E-11	15.1	2530-00-015-8245	19207	8757687-1
KITS			95745	MK1772-20
KITS		2530-00-319-6001	19207	8332057
KITS		4940-00-186-3199	26952	KH2000
1	1	6110-00-014-6259	19207	11588320
1	2	5935-00-773-1428	19207	7731428
1	3	5935-00-846-3883	96906	MS75021-1
1	4	5365-00-090-5426	19207	7722333
1	5	5330-00-576-4609	19207	7525965
1	6	5305-00-054-6654	96906	MS51957-30
1	7	5310-00-929-6395	96906	MS35338-136
1	8	5310-00-393-6685	19207	7723309
1	9		19207	11588315-2
1	10	5310-00-903-5966	96906	MS51971-1
1	11	5940-00-283-5280	96906	MS25036-106
1	12	5310-00-767-0445	96906	MS51971-2
1	13		81349	M13486-1-5-8
1	14		19207	11588317
1	15	5935-01-038-9629	12339	76D05086
1	16	5310-00-974-6623	96906	MS35338-140
1	17	5305-00-051-0837	96906	MS51957-96
1	18	5310-00-933-8121	96906	MS35338-139
1	19	5305-00-082-6721	96906	MS51957-81
1	20	5310-00-543-2009	96906	MS15795-710
1	21	5305-00-082-6721	96906	MS51957-81
2	1	6110-00-902-3230	19207	11588318
2	1	6110-01-050-5791	19207	11682068
2	2	5305-00-082-6721	96906	MS51957-81
2	3	5310-00-933-8121	96906	MS35338-139
2	4	5935-00-773-1428	19207	7731428
2	5	5935-00-846-3883	96906	MS75021-1
2	6	5365-00-090-5426	19207	7722333
2	7	5330-00-576-4609	19207	7525965
2	8		19207	11588316
2	9	5305-00-054-6654	96906	MS51957-30
2	10	5310-00-929-6395	96906	MS35338-136
2	11	5310-00-903-5966	96906	MS51971-1
2	12		19207	11588315-2
2	13	5310-00-393-6685	19207	7723309
2	14	5310-00-934-9739	96906	MS35649-242
2	15	5325-01-242-7083	96906	MS35489-17

CROSS-REFERENCE INDEXES

FIGURE AND ITEM NUMBER INDEX

FIG	ITEM	STOCK NUMBER	CAGEC	PART NUMBER
2	16		49956	267-1012P17
2	17	5995-00-088-4273	19207	11682066
2	17	6150-00-902-3313	19207	11588347
2	18	5330-00-946-8344	96906	MS52000-5
2	19	5310-00-543-2410	96906	MS35338-40
2	20	5305-00-054-5650	96906	MS51957-16
2	21		96906	MS25043-16C
2	22	5935-01-160-1788	96906	MS3452W16-10S
2	23	5310-00-933-8121	96906	MS35338-139
2	24	5310-00-543-2009	96906	MS15795-710
2	25	5305-00-082-6721	96906	MS51957-81
2	26	5310-00-045-3296	96906	MS35338-43
2	27	5305-00-989-7435	96906	MS35207-264
2	28	5340-00-291-5347	96906	MS21919WDG8
3	1	6110-00-103-2092	19207	11682068-1
3	2	5305-00-082-6721	96906	MS51957-81
3	3	5310-00-933-8121	96906	MS35338-139
3	4	5935-00-773-1428	19207	7731428
3	5	5935-00-846-3883	96906	MS75021-1
3	6	5365-00-090-5426	19207	7722333
3	7	5330-00-576-4609	19207	7525965
3	8		19207	11588316
3	9	5305-00-054-6654	96906	MS51957-30
3	10	5310-00-929-6395	96906	MS35338-136
3	11	5310-00-903-5966	96906	MS51971-1
3	12		19207	11588315-5
3	13	5310-00-393-6685	19207	7723309
3	14	5310-00-934-9739	96906	MS35649-242
3	15	5325-00-281-1557	79497	G1895
3	16		49956	267-1012P17
3	17	2590-01-131-3664	19207	11682066-1
3	18	5330-00-946-8344	96906	MS52000-5
3	19	5310-00-543-2410	96906	MS35338-40
3	20	5305-00-054-5650	96906	MS51957-16
3	21	5935-01-184-7188	96906	MS25043-16DA
3	22	5935-01-160-1788	96906	MS3452W16-10S
3	23	5305-00-082-6721	96906	MS51957-81
3	24	5310-00-582-5677	21699	10741-14-28
3	25		19207	11649106
3	26	5310-00-045-3296	96906	MS35338-43
3	27	5305-00-989-7435	96906	MS35207-264
3	28	5340-00-598-0597	96906	MS21919DG8
4	1	6220-00-669-5623	96906	MS51329-1
4	2	6220-00-500-0437	96906	MS53047-1
4	3	6240-00-044-6914	96906	MS35478-1683
4	4	5330-00-297-7106	19207	7320658
4	5	6220-01-252-9283	96906	MS51329-23
4	6	6240-00-019-0877	96906	MS15570-1251
4	7	5305-00-269-3211	96906	MS90725-60
4	8	5310-00-627-6128	96906	MS35335-35
4	9	6220-00-846-9745	19207	8741645

CROSS-REFERENCE INDEXES

FIGURE AND ITEM NUMBER INDEX

FIG	ITEM	STOCK NUMBER	CAGEC	PART NUMBER
4	10	6240-00-019-0877	96906	MS15570-1251
4	11	5330-00-678-9047	73331	5942528
4	12	6220-00-775-2384	19207	8741646
4	13	5305-00-764-0070	96906	MS51959-46
4	14	5306-00-225-9084	96906	MS90726-29
5	1	6220-01-372-3883	19207	12375837
5	2	6220-01-359-2870	19207	12375841
5	3	5330-00-462-0907	19207	11639519-2
5	4	6240-00-044-6914	96906	MS35478-1683
5	5	6240-00-019-3093	96906	MS15570-623
5	6	5935-00-572-9180	19207	8338566
5	7	5310-00-833-8567	19207	8338567
5	8	5999-00-057-2929	19204	572929
5	9		19207	12375838
5	10	6220-01-297-3217	19207	12360870-2
5	11	6240-00-019-0877	96906	MS15570-1251
5	12	6220-01-284-2709	19207	12360850-1
5	13	5310-00-850-1611	96906	MS35338-54
5	14	5305-00-115-9526	80204	B1821BH038C075D
6	1		19207	12440402
6	1	2530-01-044-5313	19207	12255284
6	2	5310-00-762-6248	96906	MS51967-29
6	3		80204	B1821BH100C200L
6	4	3110-00-902-3306	19207	11588259
6	5	5310-00-407-9566	96906	MS35338-45
6	6	5310-00-931-3175	96906	MS35691-10
6	7	2530-01-052-9384	19207	11588282
6	7	2530-01-092-4060	19207	11649082-1
6	8	5305-00-115-9526	80204	B1821BH038C075D
6	9	5310-00-637-9541	96906	MS35338-46
6	10	5315-00-797-5999	19207	11588314
6	10	5315-01-052-8994	19207	12255285
6	11		19207	11588309
6	11		19207	11649068
6	11		19207	11652431
6	11		19207	12436799
6	12	5306-00-225-8498	96906	MS90725-33
6	13	5325-00-249-6352	96906	MS35489-72
6	14	5305-00-269-2804	96906	MS90726-61
6	15	5305-00-071-2070	80204	B1821BH050C175N
6	16		19207	11588335
6	17	5315-01-020-0770	19207	8720578-2
6	17	5315-01-116-8149	19207	8720578
6	18	5305-00-071-2079	80204	B1821BH050C400N
6	19		19207	11647930
6	19		19207	11647930-1
6	20	5310-00-241-6667	96906	MS16228-8C
6	21	3120-00-941-2259	96906	MS17795-141
6	22	5365-00-177-8283	19207	11588334
6	22	5365-01-054-8825	19207	11588334-1
6	23	4010-01-193-9331	80535	577-0615

CROSS-REFERENCE INDEXES

FIGURE AND ITEM NUMBER INDEX

FIG	ITEM	STOCK NUMBER	CAGEC	PART NUMBER
6	24	5340-01-047-7486	19207	11669139
6	25	2530-01-091-1638	19207	11647932-1
6	25	5306-01-091-1637	19207	11647932
6	26	3040-00-177-8122	19207	11588274
6	27	3120-00-903-0464	60960	P100-12
6	28	2530-01-050-6876	19207	12255293
6	28	3040-01-027-6191	19207	11649135
6	29	5310-00-245-8825	96906	MS16228-4C
6	30		19207	11588359
6	31	5310-00-582-5965	96906	MS35338-44
6	32	5305-00-068-0502	96906	MS90725-6
6	32	5305-00-071-2505	80204	B1821BH025C088N
6	33		19207	11588360
6	34	5305-00-071-2505	80204	B1821BH025C088N
6	35	5306-00-226-4842	80204	B1821BH031C425N
6	36		19207	11588258
6	37	5305-00-069-5579	96906	MS90725-95
6	37	5305-00-071-2059	80204	B1821BH044C250N
6	38	5310-00-209-0965	96906	MS35338-47
7	1		96906	MS20995N51-6
7	2	5305-00-573-7897	96906	MS35265-93
7	3	5310-00-407-9566	96906	MS35338-45
7	4	5340-01-132-1158	19207	10947473
7	5	5330-00-334-4224	78500	2208M377
7	6	2530-00-909-3785	19207	10947468
7	6	3120-00-107-1545	19207	10947477
7	8	5307-00-463-4558	19207	10896705
7	9	5306-00-902-3235	19207	11588257
7	10	2530-01-044-3792	19207	11588296
7	11	3120-00-541-9862	19207	10947368
7	12	5310-00-167-1309	88044	AN316-12R
7	13		19207	11652460
7	14	5310-00-584-7888	96906	MS35338-51
7	15	5310-00-763-8901	96906	MS51968-23
7	16	5365-01-095-9714	19207	10947472-3
7	17	5310-01-097-3609	19207	10947472-1
7	18	5310-01-097-3610	19207	10947472-2
7	19	3110-01-117-3524	19207	10947470
7	20	2530-00-903-0489	78500	3101M91
7	21		19207	10947475
7	22	5310-00-763-8911	96906	MS51968-17
7	23	5310-00-579-5554	96906	MS35333-35
7	24	5310-00-785-1762	96906	MS51968-9
7	25	2530-00-015-8245	19207	8757687-1
8	1		96906	MS20995N51-6
8	2	5305-00-551-5097	96906	MS35265-94
8	3	5310-00-407-9566	96906	MS35338-45
8	4	5340-01-132-1158	19207	10947473
8	5	5330-00-334-4224	78500	2208M377
8	6		19207	12440403
8	6	2530-01-027-0201	19207	11649136

CROSS-REFERENCE INDEXES

FIGURE AND ITEM NUMBER INDEX

FIG	ITEM	STOCK NUMBER	CAGEC	PART NUMBER
8	7	3120-00-107-1545	19207	10947477
8	8	5307-00-463-4558	19207	10896705
8	9	2530-00-103-2203	19207	11649137
8	10	2530-00-752-1601	78500	A3144X206
8	11		78500	1107278
8	12	5310-00-574-0436	88044	AN315-18L
8	13	2530-01-027-6944	19207	11649138
8	14	5310-00-835-2140	96906	MS35692-69
8	15	5310-00-264-1243	81352	AN315-18R
8	16	2530-00-752-1602	78500	A3144W205
8	17	5315-00-013-7214	96906	MS24665-359
8	18	5365-01-095-9714	19207	10947472-3
8	19	5310-01-097-3609	19207	10947472-1
8	20	5310-01-097-3610	19207	10947472-2
8	21	3110-01-117-3524	19207	10947470
8	22	2530-00-903-0489	78500	3101M91
8	23		19207	10947475
8	24	5310-00-763-8911	96906	MS51968-17
8	25	5310-00-627-6128	96906	MS35335-35
8	26	5310-00-082-1679	96906	MS35690-627
8	27	2530-00-015-8245	19207	8757687-1
9	1		19207	11588280
9	2		19207	11588259
9	3	5310-00-407-9566	96906	MS35338-45
9	4	5310-00-931-3175	96906	MS35691-10
9	5	5310-00-584-5272	96906	MS35338-48
9	6	5305-00-071-2069	80204	B1821BH050C150N
9	7	5340-01-043-8193	19207	11588302
9	8	2530-01-052-9384	19207	11588282
9	9	6230-01-038-8293	19207	11588308
9	10	2530-00-015-8245	19207	8757687-1
9	11	5306-00-625-3241	19207	10947478
9	12	5310-00-627-6128	96906	MS35335-35
9	13	5310-00-785-1762	96906	MS51968-9
9	14	5306-00-226-4842	80204	B1821BH031C425N
9	15		19207	11588258
9	16	5305-00-071-2059	80204	B1821BH044C250N
10	1	2530-01-040-4990	19207	11647950
10	2	6220-01-038-8292	19207	11682067
10	3	5305-00-071-2069	80204	B1821BH050C150N
10	4	5310-00-584-5272	96906	MS35338-48
10	5	2530-01-052-9384	19207	11588282
10	6	5305-00-958-5252	96906	MS35190-304
10	7	5340-01-105-5013	19207	11652424
10	8	5310-00-407-9566	96906	MS35338-45
10	9	5306-00-226-4825	80204	B1821BH031C075N
10	10	3110-00-902-3306	19207	11588259
10	11	5310-00-931-3175	96906	MS35691-10
10	12	2530-00-015-8245	19207	8757687-1
10	13	5306-00-625-3241	19207	10947478
10	14	5310-00-627-6128	96906	MS35335-35

CROSS-REFERENCE INDEXES

FIGURE AND ITEM NUMBER INDEX

FIG	ITEM	STOCK NUMBER	CAGEC	PART NUMBER
10	15	5310-00-785-1762	96906	MS51968-9
10	16	5306-00-226-4842	80204	B1821BH031C425N
10	17	5306-00-226-4842	80204	B1821BH031C425N
10	18	5310-00-209-0965	96906	MS35338-47
10	19		19207	11588258
11	1	2530-00-103-2162	19207	11649047
11	2	4010-01-006-4585	19207	11649073
11	3	5340-00-904-1670	96906	MS17984C421
11	4		19207	11153758-3
11	5	2520-01-106-9175	19207	11649049
11	6	5306-00-225-8496	96906	MS90725-31
11	7	5310-00-407-9566	96906	MS35338-45
11	8		19207	12436800
11	8	5340-01-024-6707	19207	12255119
11	9	5306-01-114-0963	80204	B1821BH038C100L
11	10	5315-00-902-0411	96906	MS17984-C1641
11	11	5305-00-989-7435	96906	MS35207-264
11	12	3110-00-902-3306	19207	11588259
11	13		19207	11588258
11	14	5310-00-209-0965	96906	MS35338-47
11	15	5305-00-069-5579	96906	MS90725-95
11	16	5306-00-226-4842	80204	B1821BH031C425N
11	17	5340-01-173-3310	96906	MS17984C429
11	18	2530-00-015-8245	19207	8757687-1
11	19	5306-00-625-3241	19207	10947478
11	20	5310-00-627-6128	96906	MS35335-35
11	21	5310-00-785-1762	96906	MS51968-9
11	22	5310-00-931-3175	96906	MS35691-10
11	23		19207	11649028
11	24	5310-00-723-4458	96906	MS35690-404
11	25		19207	11682067
11	26	2530-01-092-4060	19207	11649082-1
11	27	5310-00-584-5272	96906	MS35338-48
11	28	5305-00-071-2069	80204	B1821BH050C150N
11	29	5310-00-582-5965	96906	MS35338-44
11	30	5305-00-071-2505	80204	B1821BH025C088N
12	1	2990-00-903-0490	19207	10947481
12	2	5340-01-050-5802	19207	10947479
12	3	5310-00-853-9335	96906	MS35691-13
12	4	5340-00-740-9366	19207	7409366
12	5	5365-01-054-5062	19207	10947448
12	6	5310-00-637-9541	81718	H2525M
12	7	5310-00-891-1754	96906	MS35691-18
12	8	2530-00-918-6211	19207	9090274
12	9	5305-00-782-9489	80204	B1821BH038C200N
12	10		19207	10947450
12	11	5340-01-055-8299	19207	10947480
12	12	5306-00-050-1238	96906	MS90727-32
13	1		19207	10947482
13	1	2530-00-752-1766	78500	A3236L974
13	2	5360-00-813-7813	19207	10896716

CROSS-REFERENCE INDEXES

FIGURE AND ITEM NUMBER INDEX

FIG	ITEM	STOCK NUMBER	CAGEC	PART NUMBER
13	3	5310-00-529-6514	19207	8331244
13	4	5310-00-264-4086	19207	8331245
13	5	5360-00-741-1017	19207	7411017
13	6	2530-01-247-7966	19207	5706702
13	7		19207	8331242
13	8	5306-00-437-8765	19207	8331243
13	9	5310-00-516-0337	19207	5160337
13	10	5310-00-252-2130	19207	10896709
13	11	5315-00-842-3044	96906	MS24665-283
13	12	5310-00-842-1488	96906	MS35692-21
13	13	5310-00-773-7618	96906	MS15795-814
13	14	2530-00-391-1210	78500	A372G7
13	14	2530-01-258-2786	78500	A-372-F-6
13	15	3040-01-234-8892	19207	10947463-1
13	15	3040-01-285-6290	19207	10947463-2
13	16	5330-00-168-5673	19207	10896683
13	17	5310-01-006-8845	19207	10896712
13	18	5315-00-451-1047	19207	10896681
13	19	5306-00-625-3222	19207	10947484
13	20	5325-00-903-0491	19207	10947485
13	21	5310-00-584-7888	96906	MS35338-51
13	22	5310-00-763-8901	96906	MS51968-23
13	23	5310-00-880-7746	96906	MS51968-5
13	24	5310-00-407-9566	96906	MS35338-45
14	1	5305-01-140-9118	80204	B1821BH038C088N
14	2	5310-00-637-9541	81718	H2525M
14	3	2530-00-030-1408	19207	7372762
14	4	2530-00-753-9270	78500	1745B2
14	5	2530-00-274-4511	19207	7411010
14	6	2530-00-737-3260	19207	7373260
14	7	5310-00-275-6635	19207	5214539
14	8	4730-00-278-5812	12603	620235
14	9	5310-00-209-1761	19207	5160323
14	10	4730-00-516-7419	19207	5167419
15	1	5310-00-637-9541	96906	MS35338-46
15	2	5305-00-269-2804	96906	MS90726-61
15	2	5305-01-140-9118	80204	B1821BH038C088N
15	3	1450-00-337-8662	18876	8017004
15	4	2530-00-715-7662	19207	8017005
15	5	5340-01-051-3592	19207	8017031
15	6	5310-00-637-9541	96906	MS35338-46
15	7	2530-00-671-4783	19207	8017079
15	8	5305-00-725-2317	80204	B1821BH038C150N
15	9	2530-00-312-1349	63477	F4572
16	1	4730-00-773-2163	63477	7979691
16	2	5330-00-359-0442	34558	5922
16	3	4720-00-489-5350	96906	MS521301A204R
16	4	4730-00-908-3194	96906	MS35842-11
16	5	4710-00-511-1692	23705	A298322
17	1	5305-00-989-7435	96906	MS35207-264
17	2	5310-00-045-3296	96906	MS35338-43

CROSS-REFERENCE INDEXES

FIGURE AND ITEM NUMBER INDEX

FIG	ITEM	STOCK NUMBER	CAGEC	PART NUMBER
17	3	5340-00-291-5347	96906	MS21919WDG8
17	4	4730-00-659-7769	63477	5167157
17	5	5310-00-407-9566	96906	MS35338-45
17	6	5306-00-225-9084	96906	MS90726-29
17	7	4720-00-902-3301	81902	BSK5789
17	8	5310-00-835-2037	96906	MS35691-53
17	9	4720-00-454-8619	19207	10947438-4
17	10	4720-00-600-9042	19207	10947438-7
17	11	4730-01-109-7108	19207	10896714
17	12	5330-01-095-5754	19207	11674973-1
17	13	5330-01-095-5755	19207	11674973-2
17	14	4730-00-516-7419	19207	5167419
17	15	4720-00-902-3302	19207	10947438-5
17	16	5306-00-225-9088	96906	MS90726-33
17	17		96906	MS51992-13
17	18	5340-00-721-8015	96906	MS21104D10
17	19	5305-00-995-3442	96906	MS35207-268
18	1	5305-00-989-7435	96906	MS35207-264
18	2	5310-00-045-3296	96906	MS35338-43
18	3	5340-00-291-5347	96906	MS21919WDG8
18	4	5306-00-225-9084	96906	MS90726-29
18	5	5310-00-407-9566	96906	MS35338-45
18	6	4730-00-659-7769	63477	5167157
18	7	4720-00-902-3301	19207	10947438-3
18	8	4720-00-454-8619	19207	10947438-4
18	9	5310-00-835-2037	96906	MS35691-53
18	10	4730-00-516-7419	19207	5167419
18	11	5330-01-095-5754	19207	11674973-1
18	12	5330-01-095-5755	19207	11674973-2
18	13	4730-01-109-7108	19207	10896714
18	14	4720-00-902-3302	19207	10947438-5
18	15	4720-00-600-9042	19207	10947438-7
19	1		18876	8017234
19	2	5330-00-778-0454	18876	8017063
19	3	5330-00-778-0451	18876	8017174
19	4		18876	8017082
19	5	5340-00-818-1735	16662	AC2003D
19	6	5360-00-321-6462	18876	8017072
19	7		18876	8017069
19	8	5306-00-225-8496	96906	MS90725-31
19	9	5310-00-407-9566	96906	MS35338-45
20	1	4730-00-595-0083	79146	MS35746-1
20	2	5330-00-090-2128	06853	213630
20	3	4720-00-902-3303	81902	BSK5791
20	4	4730-00-253-4412	96906	MS39230-2
20	5	4730-00-202-6491	81495	S-738-11
20	6	4720-00-454-8618	19207	10947438-6
20	7	2530-00-021-2366	96906	MS53004-2
20	8	5305-00-269-3211	96906	MS90725-60
20	9	5310-00-080-6004	96906	MS27183-14
20	10	5310-00-637-9541	81718	H2525M

CROSS-REFERENCE INDEXES

FIGURE AND ITEM NUMBER INDEX

FIG	ITEM	STOCK NUMBER	CAGEC	PART NUMBER
20	11	5310-00-732-0558	96906	MS51967-8
20	12	2530-00-903-0466	16662	AD35779
20	13	4730-00-196-1505	96906	MS51953-101
20	14	4820-00-720-4488	96906	MS35782-2
20	15	4730-00-279-0133	19207	10947430
20	16	4730-00-800-7569	88233	03080-0020
20	17	4720-00-903-0462	19207	10947438-1
21	1	5340-00-584-6556	96906	MS21919WDG10
21	2	5305-00-989-7435	96906	MS35207-264
21	4	9905-00-831-0208	40342	N10790B
21	5	9905-00-685-6540	40342	N10790C
21	6	5360-00-598-7048	16662	AC3105
21	7	4730-00-595-0083	79146	MS35746-1
21	8	5330-00-090-2128	06853	213630
21	9	5310-00-045-3296	96906	MS35338-43
21	10	4720-00-902-3303	19207	10947438-2
21	11	4730-00-253-5757	21450	120145
21	12	4720-00-600-9036	19207	10947438-20
21	13	2530-00-021-2366	96906	MS53004-2
21	14	5306-01-075-8519	96906	MS90725-36
21	15	5310-00-081-4219	96906	MS27183-12
21	16	5310-00-245-3424	96906	MS17829-5C
21	17	4720-00-600-9140	19207	10947438-18
21	18	4730-00-350-8600	05643	NP5041033
21	19	2530-00-106-5334	19207	11682378
21	20	4820-00-174-0339	96906	MS35782-3
21	21	4730-00-540-6146	88044	AN912-4J
21	22	4730-00-089-2515	21450	444618
21	23		19207	11682381
21	24	5305-00-269-3211	96906	MS90725-60
21	25	5310-00-080-6004	96906	MS27183-14
21	26	5310-00-637-9541	81718	H2525M
21	27	5305-00-225-3843	96906	MS90728=8
21	28	5310-00-582-5965	96906	MS35338-44
21	29	4730-00-720-4620	88044	AN911-3J
21	30	4720-00-903-0462	19207	10947438/1
22	1	5306-00-225-8496	96906	MS90725-31
22	2	2530-00-026-0255	78500	3262H86
22	3	5330-01-116-3602	19207	10896731
22	4	5310-00-752-1633	19207	7521633
22	5	2530-00-193-8183	19207	7529054
22	5	2530-00-193-8187	19207	7529053
22	6	5310-00-518-5566	96906	MS51983-1
22	6	5310-00-594-8038	96906	MS51983-2
22	7	5310-00-732-0559	96906	MS51968-8
22	8	5310-00-637-9541	81718	H2525M
22	9	5340-00-134-5121	19207	10896733
22	10	2530-00-288-2986	19207	10896696
22	11	2530-00-176-7859	19207	10896708
22	12	2530-00-026-3916	19207	7521636
22	13	5306-00-177-5278	19207	10896689

CROSS-REFERENCE INDEXES

FIGURE AND ITEM NUMBER INDEX

FIG	ITEM	STOCK NUMBER	CAGEC	PART NUMBER
22	14	5306-00-170-0141	19207	10896719-2
22	14	5306-01-104-5885	19207	10896719-1
22	15	2530-00-752-1654	19207	7521654
22	16	5330-00-891-7826	19207	10896684
22	17	3110-00-100-5951	96906	MS19081-112
22	18	2530-00-026-0265	96906	MS53044-5
22	19	3110-00-087-9881	19207	10948079
22	20	2530-00-738-9061	96906	MS53045-3
22	21	5310-00-752-1650	78500	1229G969
23	1	2610-00-262-8677	81348	9.00-20/D/TBCC
23	2	2610-00-269-7383	23862	2289994
23	3	2640-00-050-1229	17875	100AA
23	4	2640-00-060-3550	08588	600R
24	1	5306-00-902-3236	19207	10947411
24	2	5120-00-902-3298	19207	11588276
24	3	5305-00-947-4355	80204	B1821BH075C325N
24	4	5310-00-584-7888	96906	MS35338-51
24	5		19207	11588295
24	6	2540-00-815-6098	81902	33048
24	7	5340-01-097-3948	19207	11588352-4
24	8	5340-01-063-8997	19207	12269866
24	9	5305-00-989-7435	96906	MS35207-264
24	10	2590-01-091-1641	19207	11649079
24	11	5310-00-763-8921	96906	MS51967-23
24	12	5310-00-809-8533	96906	MS27183-23
24	13		19207	11588351-1
24	13	5305-01-257-3859	19207	12313026
24	14	5310-00-584-7888	96906	MS35338-51
24	15	5306-00-902-3233	19207	11588350
24	16		96906	MS51575-16
24	17	5310-00-045-3296	96906	MS35338-43
24	18	5340-00-290-4503	96906	MS122088
25	1	4030-00-431-5536	19207	8537648
25	2	4010-00-082-5963	81349	M83420/3-004
25	3	2530-01-040-4208	19207	11612169
25	4		19207	11612329-2
25	5		19207	11612168
25	6	5365-00-252-4770	96906	MS16624-1225
25	7		19207	11612186
26	1		19207	11649031
26	1		19207	12440404
26	2		19207	11649033
26	3	5305-00-719-5124	96906	MS51960-88
26	4		19207	11649116
26	5	5340-01-100-7384	19207	11649117
26	6	5310-00-925-9645	96906	MS21083N04
26	7		19207	12331681-2
26	8		19207	12331681
26	9		19207	12331681-3
26	10		19207	11649118
26	11	5320-00-117-7522	96906	MS20426AD8-10

CROSS-REFERENCE INDEXES

FIGURE AND ITEM NUMBER INDEX

FIG	ITEM	STOCK NUMBER	CAGEC	PART NUMBER
26	12		96906	MS20257C6-2600
26	13	5305-00-071-1323	96906	MS51960-66
26	14		19207	12440377
26	15	5305-00-071-1318	96906	MS51957-83
26	16	5310-00-926-1835	96906	MS21083C3
26	17		19207	11649127
26	17		19207	12440406
26	18	5305-00-068-0515	80204	B1821BH025F100N
26	19	2590-01-313-8021	19207	11648942
26	20	5315-00-844-5831	96906	MS16562-77
26	21	2590-01-091-1644	19207	11649121
26	22	5340-01-102-8291	19207	11649123
26	23	5315-00-816-1794	24617	103374
26	24	5315-00-802-0240	96906	MS20392-7C91
26	25	5310-00-809-5998	96906	MS27183-18
26	26	5340-01-091-1645	19207	11649128
26	27		19207	11649120
26	28	5310-00-809-4058	96906	MS27183-10
26	29	5310-00-682-5930	96906	MS35340-44
26	30	5310-00-761-6882	96906	MS51967-2
26	31	5310-00-241-6604	96906	MS17830-4C
26	32		96906	MS20257C6-4400
26	33		96906	MS20426AD8-8
26	34		19207	12440378
26	35		96906	MS51937-1C
26	36	5330-01-155-3915	19207	11649078
26	37	2540-01-115-8166	19207	11649032
26	38	5305-00-989-7435	96906	MS35207-264
26	39	4010-01-006-4585	19207	11649073
26	40	5315-00-252-9921	96906	MS17984-C818
26	41	5340-01-091-1640	19207	11649071
26	42	5310-00-582-5965	96906	MS35338-44
26	43	5305-00-988-1725	96906	MS35206-281
27	1	2540-01-255-7937	19207	11652401
27	2		19207	11652388
27	3	5330-01-265-2202	19207	11652365-2
27	4	5320-00-721-5211	96906	MS20470A4-6
27	5	5340-00-821-0304	82240	B1900-377
27	6	5340-01-256-0097	19207	11652363
27	7		19207	11652442
27	8	5320-00-543-3680	96906	MS20426A4-7
27	9	5320-00-855-2185	96906	MS20426A6-9
27	10		19207	11652362
27	11	5305-00-984-6209	96906	MS35206-262
27	12	5310-00-045-3296	96906	MS35338-43
27	13	5310-00-934-9758	96906	MS35649-202
27	14	5310-00-809-4058	96906	MS27183-10
27	15	5306-00-884-8947	96906	MS21094-4004
27	16	5305-00-269-3211	96906	MS90725-60
27	17	5310-00-637-9541	81718	H2525M
27	18	5310-00-732-0558	96906	MS51967-8

CROSS-REFERENCE INDEXES

FIGURE AND ITEM NUMBER INDEX

FIG	ITEM	STOCK NUMBER	CAGEC	PART NUMBER
27	19		19207	11652403
28	1		19207	12440430
28	1	2540-00-177-8299	19207	11588273
28	1	2540-01-038-8294	19207	12255287
28	2		19207	12436739
28	3		80204	MS90727-116
28	4		19207	11588272
28	4		19207	12436749
28	5	2540-00-054-7702	96906	MS51337-1
28	6	5315-00-234-1848	96906	MS24665-629
28	7	5310-00-045-1358	24617	451358
28	8	5310-00-732-0558	96906	MS51967-8
28	8	5310-00-732-0560	96906	MS51968-14
28	9	5310-00-584-5272	96906	MS35338-48
28	10	5340-00-376-3039	76005	J-5864-102
28	11	5305-00-719-5219	96906	MS90727-111
28	12	5306-00-225-9086	96906	MS90726-31
28	13	5310-00-407-9566	96906	MS35338-45
28	14	2530-00-545-5406	06853	212227
28	15		19207	11588271
28	15		19207	12255286
28	15		19207	12436750
28	16		19207	10922126
28	17	5310-00-045-3299	96906	MS35338-42
28	18	5305-00-984-6191	96906	MS35206-243
28	19	5305-00-855-0965	96906	MS24629-38
28	20	4010-00-903-0463	19207	10947252
28	21	5315-00-125-6779	19207	11612194-3
28	21	5315-01-091-1636	19207	11612194-4
28	22	5315-00-007-6103	96906	MS17984-C616
28	23	5310-00-943-2141	96906	MS51968-15
29	1	2530-01-027-0200	19207	11652399
29	2	4030-00-431-5536	81337	5-4-4783
29	3	5315-01-116-2644	19207	7357975-1
29	4		81349	MIL-W-83420
29	5		19207	11652356
29	6	5315-00-814-3530	96906	MS16562-35
29	7		19207	11652374
29	8		19207	11652384
29	9		19207	11652386
30	1	2530-01-091-1646	19207	12250245
30	2		19207	11649090
30	3		19207	12250230
30	4	5305-01-025-9980	96906	MS51964-124
30	5		19207	12250119
30	6		19207	11682374
31	1	2590-00-903-0465	19207	10947381
31	2		19207	11588336
31	3	5310-00-933-8121	96906	MS35338-139
31	4	5305-00-068-0502	96906	MS90725-6
31	5	5315-00-993-4125	96906	MS16562-17

CROSS-REFERENCE INDEXES

FIGURE AND ITEM NUMBER INDEX

FIG	ITEM	STOCK NUMBER	CAGEC	PART NUMBER
31	6		52793	18151
31	7	5120-01-135-1060	19207	10948145
31	8	5310-00-809-4061	96906	MS27183-15
31	9	5310-00-637-9541	81718	H2525M
31	10	5305-00-721-5492	80204	B1821BH038C063N
31	11	5310-00-809-8536	96906	MS27183-24
31	12		19207	11588263
31	13	5315-00-012-0123	96906	MS24665-355
32	1	3040-00-076-8670	19207	11652335
32	1	3040-01-035-5014	19207	12250222
32	2	2590-00-911-5287	24835	B3373-31
32	2	4730-00-808-6814	15434	C0505027400
32	3	4730-00-908-6293	96906	MS35842-15
32	4		19207	12440397
32	5	4730-00-909-8627	96906	MS35842-13
32	6	4010-00-082-5963	81349	M83420/3-004
32	7	4030-00-431-5536	81337	5-4-4783
32	8	5315-01-116-7602	19207	11652443
32	9	5315-00-940-9468	96906	MS9245-68
32	10	5310-00-809-8541	96906	MS27183-27
32	11	5315-00-165-8480	19207	11602350-3
32	12	5315-01-096-7425	19207	11649131
32	13	5310-00-809-8541	96906	MS27183-27
32	14	5315-00-012-0123	96906	MS24665-355
32	15	5315-01-114-9109	19207	11602356-1
32	16	5310-00-081-4219	96906	MS27183-12
32	17	4010-01-114-0009	19207	11649130-2
32	18	5306-00-225-8496	96906	MS90725-31
32	19	5305-00-988-1727	96906	MS35206-283
32	20	5310-00-582-5965	96906	MS35338-44
32	21	3120-01-097-8992	19207	11647952
32	22	5315-01-114-9375	19207	11652389-2
32	23	5315-01-111-6810	19207	11649097
32	24	5315-01-099-0668	19207	11649044
32	25	3120-00-549-8098	96906	MS17795-135
32	26	5315-01-115-3481	19207	11652389-1
32	27	5310-00-809-8533	96906	MS27183-23
32	28	5315-00-926-5767	96906	MS9245-65
32	29	2590-01-036-6758	19207	11652398
32	29	2590-01-036-6759	19207	11649045
32	30	5305-00-269-3248	80204	B1821BH038F350N
32	31		19207	11649035
32	31		19207	11652378
32	32	5340-01-031-4452	19207	11652381
32	33	5310-00-950-0039	96906	MS21044N6
32	34	5315-00-889-2545	96906	MS20392-12C73
32	35		19207	11649034
32	35		19207	11652377
32	36	5310-00-167-0828	88044	AN960-1616
32	37	5315-00-013-7228	96906	MS24665-423
33	1	2510-00-903-0492	72413	NAD11331-2

CROSS-REFERENCE INDEXES

FIGURE AND ITEM NUMBER INDEX

FIG	ITEM	STOCK NUMBER	CAGEC	PART NUMBER
33	2	2640-00-596-3985	19207	11601758
33	3	4820-00-242-4064	19207	8376442
33	4	5305-00-068-0511	80204	B1821BH038C125N
33	5	5310-00-637-9541	81718	H2525M
34	1	5310-00-763-8920	96906	MS51967-20
34	2	5310-00-820-6653	80045	23MS35338-50
34	3	2540-00-147-5282	19207	11588281-2
34	3	5340-00-147-5281	19207	11588281-1
34	4	5305-00-543-2419	96906	MS35291-061
34	5	5310-00-637-9541	81718	H2525M
34	6	5310-00-823-8803	96906	MS27183-21
34	7	5365-00-275-4519	19207	7339466
34	8	5306-01-105-5016	19207	11652456
34	8	5307-00-902-3407	19207	11588264
34	8	5307-01-040-4612	19207	11649046
34	9		19207	11652457
34	10	5310-00-809-3079	96906	MS27183-19
34	11	5310-00-584-5272	96906	MS35338-48
34	12	5310-00-732-0560	96906	MS51968-14
34	13	2510-00-903-0487	19207	10947382
34	14		19207	11588262-1
35	1	2530-01-247-4637	19207	11588291
35	1	4710-01-105-3042	19207	11652419
35	2	5310-00-241-6667	96906	MS16228-8C
35	2	5310-00-245-8828	96906	MS16228-16C
35	3	5310-00-809-8541	96906	MS27183-27
35	4		19207	11588266-2
35	4	5306-01-118-9558	19207	11652428-2
35	5	3120-00-107-1554	19207	11588268
35	5	3120-01-112-4442	19207	11652432
35	6	5340-00-111-5534	19207	10947273
35	7	5310-01-116-3584	19207	11588358
35	8		19207	11588267
35	9	2530-00-902-3311	19207	11588303
35	10	5365-00-740-9618	19207	7409618
35	11	5310-00-982-6562	96906	MS27183-28
35	12	5365-01-045-3435	19207	11588307
35	13	5305-00-932-3280	80204	B1821BH100C450N
35	14		19207	11588283-3
35	14	5340-01-105-5015	19207	11652445
35	14	5340-01-112-6430	19207	11588283-2
35	15	5310-01-097-3611	19207	11588269
35	16	5306-01-042-2777	19207	11588265
36	1	2510-00-103-2090	19207	11649039
36	2	5306-01-099-0329	19207	11649036
36	3	5340-00-111-5534	19207	10947273
36	4	3120-01-097-8992	19207	11647952
36	5		19207	11649042-2
36	6		19207	11649042-5
36	7	5310-01-116-3584	19207	11588358
36	8		19207	11649042-3

CROSS-REFERENCE INDEXES

FIGURE AND ITEM NUMBER INDEX

FIG	ITEM	STOCK NUMBER	CAGEC	PART NUMBER
36	9		19207	11649042-1
36	10	5365-01-045-3435	19207	11588307
36	11	2530-01-144-2911	19207	12312955
36	12	2530-01-126-3430	19207	12312968
36	13	5365-00-804-2782	96906	MS16625-1162
36	14	3120-01-102-7417	60380	10SF16-TT
36	15	5310-00-809-8541	96906	MS27183-27
36	16	5310-00-245-8828	96906	MS16228-16C
36	17	3120-01-137-3985	19207	12312956-1
36	18	5305-00-625-3258	19207	11649072
36	19	5310-00-877-5795	96906	MS21044-N8
36	20	5310-01-044-0776	19207	12259398
36	21	5365-01-044-3503	19207	12259397
36	22	5306-01-053-1879	19207	12259624
36	23		19207	12259512-2
36	24		19207	12259625
36	25		19207	12259399-1
36	26	2530-01-038-1767	19207	12259403
36	27	5365-01-050-6346	19207	12259402-1
36	28	5340-01-038-1765	19207	12259404
36	29	5310-00-584-5272	96906	MS35338-48
36	30	3120-00-549-8098	96906	MS17795-135
36	31	5310-01-097-3611	19207	11588269
36	32		19207	11649042-4
36	33		19207	11588265
36	34	5340-01-091-1642	19207	11649081-3
36	34	5340-01-091-1643	19207	11649081-4
36	35		19207	12436720-2
36	36		19207	12436724
36	37		19207	12436731
36	38	5330-00-337-8593	96906	MS29513-121
36	39		19207	12436730
36	40	5310-00-582-5965	96906	MS35338-44
36	41		19207	12436733
36	42	5340-01-261-0099	16128	4960205
36	43		96906	MS15968-15
36	44	5310-00-003-4094	96906	MS35338-48
36	45	5310-00-809-5998	96906	MS27183-18
36	46	5305-00-719-5235	80204	B1821BH050F175N
36	47	5305-00-951-2437	96906	MS21318-35
36	48	4010-00-903-0463	19207	10947252
36	49		96906	MS17990C1248
37	1	5310-00-245-8828	96906	MS16228-16C
37	2	5340-00-111-5534	19207	10947273
37	3	5305-00-969-3142	96906	MS90725-236
37	4	5340-01-105-6455	19207	11588261
37	5	5310-00-584-5272	96906	MS35338-48
37	6	5305-00-071-2069	80204	B1821BH050C150N
37	7	5310-00-809-8541	96906	MS27183-27
37	8	3120-00-107-1554	19207	11588268
37	8	3120-01-097-8992	19207	11647952

CROSS-REFERENCE INDEXES

FIGURE AND ITEM NUMBER INDEX

FIG	ITEM	STOCK NUMBER	CAGEC	PART NUMBER
37	9	5310-01-116-3584	19207	11588358
37	10		19207	11588275
37	10	4710-01-105-5014	19207	11652418
37	11	5306-00-902-3405	81902	24482P1
37	11	5306-01-118-9557	19207	11652428-1
37	12	5306-01-042-2777	19207	11588265
37	13	5310-01-097-3611	19207	11588269
37	14		19207	11588283-1
37	14	5340-01-105-5015	19207	11652445
37	14	5340-01-112-6430	19207	11588283-2
37	15	5305-00-921-0927	96906	MS90725-242
37	16	5365-01-045-3435	19207	11588307
37	17	5310-00-982-6562	96906	MS27183-28
37	18	5365-00-740-9618	19207	7409618
37	19	2530-00-902-3312	19207	11588306
37	20	5306-00-902-3238	19207	11588326
37	21	3040-01-068-1085	19207	11588277
37	22	5310-00-761-7673	96906	MS17829-12F
38	1	2510-00-103-2091	19207	11649056
38	2	5310-00-245-8828	96906	MS16228-16C
38	3	5310-00-809-8541	96906	MS27183-27
38	4	3120-01-097-8992	19207	11647952
38	5	5340-00-111-5534	19207	10947273
38	6		19207	11647952-2
38	7	5307-01-172-2658	19207	11588266-4
38	8	2530-01-144-2911	19207	12312955
38	9	5365-00-804-2782	96906	MS16625-1162
38	10	2530-01-126-3430	19207	12312968
38	11	3120-01-102-7417	18108	23-7123
38	12	3120-01-137-3985	19207	12312956-1
38	13	3120-01-145-1230	19207	12312956-2
38	14	5305-00-932-3280	80204	B1821BH100C450N
38	15		19207	11647952-1
38	16	5310-01-116-3584	19207	11588358
38	17		19207	11588267-1
38	18	5306-01-178-9261	19207	11588266-3
38	19	5310-01-097-3611	19207	11588269
38	20		19207	11649042-4
38	21	3120-00-549-8098	96906	MS17795-135
38	22	5306-01-042-2777	19207	11588265
38	23	5340-01-097-6905	19207	11649080-3
38	23	5340-01-097-6906	19207	11649080-4
38	24	5365-01-044-3503	19207	12259397
38	25	5310-01-044-0776	19207	12259398
38	26	5310-00-877-5795	96906	MS21044-N8
38	27	5306-01-048-9970	19207	12259399-2
38	28	4710-01-049-5821	19207	12259512-1
38	29	2530-01-038-1766	19207	12259405
38	30	5340-01-041-4908	19207	12259406
38	31	5310-00-081-4219	96906	MS27183-12
38	32	5310-00-407-9566	96906	MS35338-45

CROSS-REFERENCE INDEXES

FIGURE AND ITEM NUMBER INDEX

FIG	ITEM	STOCK NUMBER	CAGEC	PART NUMBER
38	33	5305-01-219-7171	96906	MS51095-324
38	34	5365-01-050-6347	19207	12259402-2
38	35	5340-01-055-4164	19207	12259627
38	36	5306-00-902-3238	19207	11588326
38	37	5310-00-809-8533	96906	MS27183-23
38	38	5310-00-761-7673	96906	MS17829-12F
38	39	2530-01-091-1639	19207	11649065
38	40	5305-00-900-0576	80204	B1821BH075C225N
38	41	5340-01-111-2845	19207	11649094
38	42	5310-00-519-6630	96906	MS17829-12C
39	1	5305-00-988-1724	96906	MS35206-280
39	2	5310-00-933-8121	96906	MS35338-139
39	3	9905-00-205-2795	96906	MS35387-1
39	4	9905-00-202-3639	96906	MS35387-2
40	1	9905-00-905-8252	19207	11588333
40	1	9905-01-091-1647	19207	11649069
40	1	9905-01-105-5029	19207	11652471
40	2	5305-00-253-5620	96906	MS21318-29
40	3	5305-00-840-5938	96906	MS21318-19
40	4	9905-00-151-5599	19207	11647945
40	4	9905-00-905-5980	19207	11588327
40	4	9905-01-091-1649	19207	11649095
40	5		19207	12440436
40	5	9905-01-091-1650	19207	12250218
40	5	9905-01-105-5031	19207	11652470
40	6	5305-00-993-0191	96906	MS35206-212
40	7		19207	11588330
40	7		19207	11649076
40	7		19207	11652468
40	8		19207	11588332
40	8		19207	11649077
40	8		19207	11652467
40	9		19207	12440437
40	9	9905-00-905-8726	19207	11588329
40	9	9905-01-091-1648	19207	11649070
40	9	9905-01-112-2246	19207	11647949
40	10		19207	11631730
40	10		19207	12441072
40	10	9905-00-905-8253	19207	11588328
40	10	9905-01-105-5030	19207	11652469
40	11	9905-00-235-4446	19207	11588364
40	12		19207	11588331
40	13	5310-00-045-3296	96906	MS35338-43
40	14	5305-00-989-7435	96906	MS35207-264
40	15	7690-01-111-2265	19207	12302516
40	16		19207	11612101
40	17	5305-00-253-5615	96906	MS21318-21
40	18	9905-01-053-8856	19207	11612100
40	19		19207	12440407
40	20		19207	12440405
40	21	5320-00-582-3298	53551	RV250-4-2

CROSS-REFERENCE INDEXES

FIGURE AND ITEM NUMBER INDEX

FIG	ITEM	STOCK NUMBER	CAGEC	PART NUMBER
40	22		19207	12440429
40	23	9905-01-226-4592	19207	12354228
40	24		19207	12440374
40	25		19207	12355972
41	1	4320-00-172-1817	26952	HP-6001-51-12
41	2	4320-01-044-7261	26952	B8008.060
41	3		26952	A8008.049
41	4	5315-01-046-7953	26952	A8018.061
41	5	5315-01-047-2784	26952	A8001.057
41	6		26952	A8019.061
41	7	5330-00-123-8671	26952	A8009.037
41	8	4730-01-053-8749	26952	A8018.021
41	9		05842	P146.75
41	10		26952	P146.118
41	11	9905-00-955-0536	18876	11031078-1
41	12		26953	AJ100.001
41	13	5340-01-044-9282	26952	C8007-098
41	14	5330-00-377-5503	07505	P146-161
41	15	4820-00-349-8952	07505	P307.900
41	16		26952	B164.232
41	17	5360-00-765-1896	05842	B162-206
41	18	3110-00-812-7349	05842	B1008-016
41	19		26952	P307.190
41	20	5330-00-759-7412	26952	B159-167
41	21		26952	A8000.212
41	22		26952	P307-186
41	23	5310-01-193-9726	43999	2W2SP-33-22-62
41	24		26952	H613.183
41	25		26953	W12.16
41	26		26952	E14.16
41	27		26952	C8031.005
41	28	1730-00-651-8476	05842	H7-900
41	29		26952	H11.261
41	30		26952	H8.010
41	31		26952	H6.199
41	32	5340-00-371-6507	07505	P60-11
41	33		26952	A8016.048
41	34		26952	A8000.066
41	35	3040-00-996-7209	26952	P6012
41	36		26952	A1028.074
41	37		26952	P307.18
41	38		26953	A8018.006
41	39		26953	A8087.900
41	40		26952	P146-50
41	41		26952	A8059.040
41	42	5306-01-047-0318	26952	A8017.048
41	43	2530-00-600-9158	19207	11612205
41	44	5305-00-225-9091	96906	MS90726-36
41	45	5310-00-407-9566	96906	MS35338-45
41	46	5310-00-880-7746	96906	MS51968-5
42	1	4320-01-039-3988	19207	12250289

CROSS-REFERENCE INDEXES

FIGURE AND ITEM NUMBER INDEX

FIG	ITEM	STOCK NUMBER	CAGEC	PART NUMBER
42	1	4320-01-379-1104	95745	MK2179
42	2	4320-00-122-0619	95745	CP13-9
42	3	6680-01-092-4058	19207	11612205-1
42	4		19207	12440383
42	4	4730-01-052-8253	81348	WW-P-471BDQBDEC
42	5	5315-00-123-0002	95745	CP13-10RP
42	6		95745	P1-7
42	7		95745	P1-6
42	8		95745	P1-17
42	9		95745	P1-18
42	10		95745	P1-19
42	11	5330-00-461-7408	95745	P1-20
42	12	4320-00-122-4327	95745	CP13-12
42	13	4320-00-125-3208	95745	P1-12RP
42	14	3110-00-100-6153	96906	MS19059-2416
42	15	5365-01-117-3796	19207	12296556
42	16	4820-01-046-3532	19207	12250223
42	17	5307-01-048-6482	19207	12250225
42	18	5310-00-971-7989	96906	MS35691-5
42	19	4820-01-333-0971	95745	CP13-13RP
43	1	5340-01-105-3041	19207	11652425
43	2	4720-01-031-3294	96906	MS500083A040360
43	3	4730-00-278-3912	24617	444029
43	4	4820-01-026-9997	19207	11602353
43	5	4730-00-837-7073	96906	MS51500A4-4S
43	6	4730-00-014-1539	72582	0112877
43	7	4720-01-111-5632	96906	MS500083A040280
43	8		96906	MS51512A4S
43	9	4720-01-031-3293	96906	MS500083A040580
43	10	4730-00-116-6769	19207	8395403
44	1	4730-00-116-6769	19207	8395403
44	2	4730-00-278-3912	24617	444029
44	3	4730-00-090-9252	19207	8713987
44	4	4720-00-600-9141	19207	11649134-1
44	5	4730-00-929-0610	88044	AN914-2K
44	6	4820-01-048-3665	19207	8744235
44	7	5365-01-033-9389	19207	12255117
44	8	5310-00-407-9566	96906	MS35338-45
44	9	5310-00-880-7744	96906	MS51967-5
44	10	4730-00-959-3816	88044	AN912-2K
44	11	4730-00-720-2007	96906	MS51819-5SS
44	12	4710-01-109-8428	19207	12259601
44	13	4730-00-866-3147	88044	AN917-2K
44	14	4730-00-840-4289	88044	AN911-2K
44	15	5306-00-225-8498	96906	MS90725-33
44	16	5340-01-039-4177	19207	12255118
44	17	5306-00-226-4833	80204	B1821BH031C200N
44	18	5306-01-075-8519	96906	MS90725-36
44	19	4720-00-600-9153	19207	11649134-2
44	20	4710-01-110-0047	19207	12259518
44	21	4720-00-600-9156	19207	11649134-3

CROSS-REFERENCE INDEXES

FIGURE AND ITEM NUMBER INDEX

FIG	ITEM	STOCK NUMBER	CAGEC	PART NUMBER
44	22		19207	12440390
44	23	4730-00-278-3912	81343	6-4 140140C
44	24	4730-00-035-8036	81343	4-4 140239C
44	25		18034	SS-4FW2-15
44	26	4730-00-817-1843	81343	4-4 140238C
44	27	4730-00-278-3912	81343	6-4 140140C
44	28		19207	12440395
44	29		19207	12440384
44	30	4730-00-035-8036	81343	4-4 140239C
44	31	4820-00-404-6071	09990	MV400S
44	32	5340-01-222-2482	09990	002118-6
44	33		09990	454001
44	34	4730-00-177-6166	81343	4-4-4 140424C
44	35		30780	1/4 X 2.0 FFF
44	36		81343	4-4 140237C
44	37	4730-00-035-8036	81343	4-4 140239C
44	38		87373	F381-1313-4-4-4X 85
44	39		87373	F381-1313-4-4-4X 46
44	40	5306-00-226-4833	80204	B1821BH031C200N
44	41		19207	12440394
45	1	6685-01-373-7976	61349	151469
45	2	4730-00-014-1539	30780	1-4-1-8PTRSS

APPENDIX G
ILLUSTRATED LIST OF MANUFACTURED ITEMS

Section 1. INTRODUCTION

G-1. SCOPE.

This appendix includes complete instructions for making items authorized to be manufactured or fabricated.

b. A part number index in alphanumeric order is provided in Table G-1 for cross-referencing the part number of the item to be manufactured to the figure that covers the fabrication criteria.

c. All bulk materials needed for the manufacture of an item are listed by part number or specification number in the manufacturing instructions.

d. When manufacturing items, make sure the appropriate tools are used to cut and shape materials. Bend tubes to configurations shown and be careful not to kink tubing. Reuse old connectors and fittings whenever possible. Make sure tubing is clean before installing after fabrication.

e. All dimensions given in Section II, Manufacturing Instructions, are in standard units.

NOTE

Only the M832 (SN J0898-001 thru 159 and J017-160thru 350) requires the items covered in Figures G-6 thru G-10.

Table G-1. Manufactured Items Part Number Cross-reference Index.

Part Number	Figure Number	Figure Title
Ml 3466/1 -5	G-1	Wire
10947382	G-2	Shock Absorber
11647930	G-3	Safety Chain
11647930-1	G-3	Safety Chain
11649039	G-4	Rear Shelter Suspension Bar
11649042-1	G-5	Spacer
11649042-2	G-5	Spacer
11649042-3	G-5	Spacer
11649042-4	G-5	Spacer
11649042-5	G-5	Spacer
11649056	G-6	Front Shelter Suspension Bar
11649120	G-7	Guide

Section 1. INTRODUCTION (Con't)

Table G-1. Manufactured Items Part Number Cross-reference Index (Con't).

Part Number	Figure Number	Figure Title
11682067-4	G-8	Light Bracket
12436726-1	G-9	Lower Mounting Block
12436726-2	G-9	Lower Mounting Block
12436726-4	G-9	Lower Mounting Block
12436727-1	G-10	Upper Mounting Block
12436727-2	G-10	Upper Mounting Block
8623652	G-11	Fabricated Steel Spacers

Section II. MANUFACTURING INSTRUCTIONS

1. Make from stranded single-conductor #14 AWG insulated copper wire, NSN 61454-00-152-6499, P/N M1348/1-5.

2. Cut to 8.0 in. (203 mm) length.

3. Strip and tin both ends.

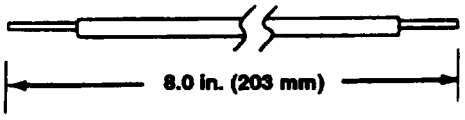

Figure G-1. Wire.

---

1. Dimensions are shown in inches and centimeters.

2. Make from shock absorber, NSN 2510-00-903-0487, P/N 10947382, according to the specifications below.

NOTE

Dimensions aline with bottoms of circular bands.

3. Measure 6.50 in. from bottom of shock absorber and mark a line.

4. Measure 8.50 in. from bottom of shock absorber and mark a line.

5. Use tape to mask two circular bands 0.25 in. (6.35 mm) wide around shock absorber inner cylinder.

6. Brush-paint circular bands around shock absorber using Polyurethane Coating, Black, NSN 8010-01-229-7540, P/N MIL-C-53039. Allow to dry completely. Remove masking tape.

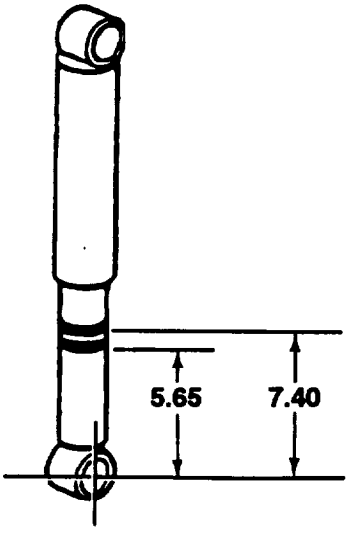

Dimensions aline with bottom of circular band.

Figure G-2. Shook Absorber.

Section II MANUFACTURING INSTRUCTIONS (Con't)

1. Make from welded chain, NSN 4010-00-720-4591, P/N 6527566.
2. Dimensions are shown in inches and centimeters.
3. Cut the appropriate length of chain per Table G-2.
4. After cutting, apply Chemical Agent Resistant Coating primer.
5. After primer dries (approximately six hours), apply Chemical Agent Resistant Coating camouflage basecoat, Green 363, color 34094.
6. Apply part marking per MIL-STD-130.

Table G-2. Safety Chain Length.

Part Number	Length (DIM A)	
	in. (±1)	cm (±2.5)
11647930	108	274.3
11647930-1	93	236.2

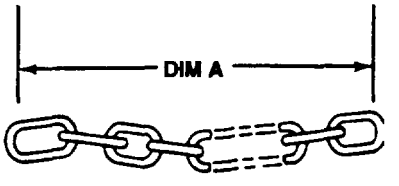

Figure G-3. Safety Chain.

Section II MANUFACTURING INSTRUCTIONS (Con't)

1. Dimensions are shown in inches.

2. Tolerances are ± 0.02 in. for two-place decimals and 0.010 in. for three-place decimals unless otherwise stated.

3. Angular tolerance is ± 1 degree.

4. All weld sizes are minimum.

5. Weld four part number 1243672&1, two part number 12436726-2, two pert number 12436726-4, two pert number 12436727-1, and six part number 12438727-2 to suspension bar per MIL-STD-1261, Class Ill, according to the specifiations below.

6. Remove all burrs and sharp edges.

7. After welding, apply Chemical Agent Resistant Coating primer.

8. After primer dries (approximately six hours), apply Chemical Agent Resistant coating camouflage basecoat, Green 383, color 34094.

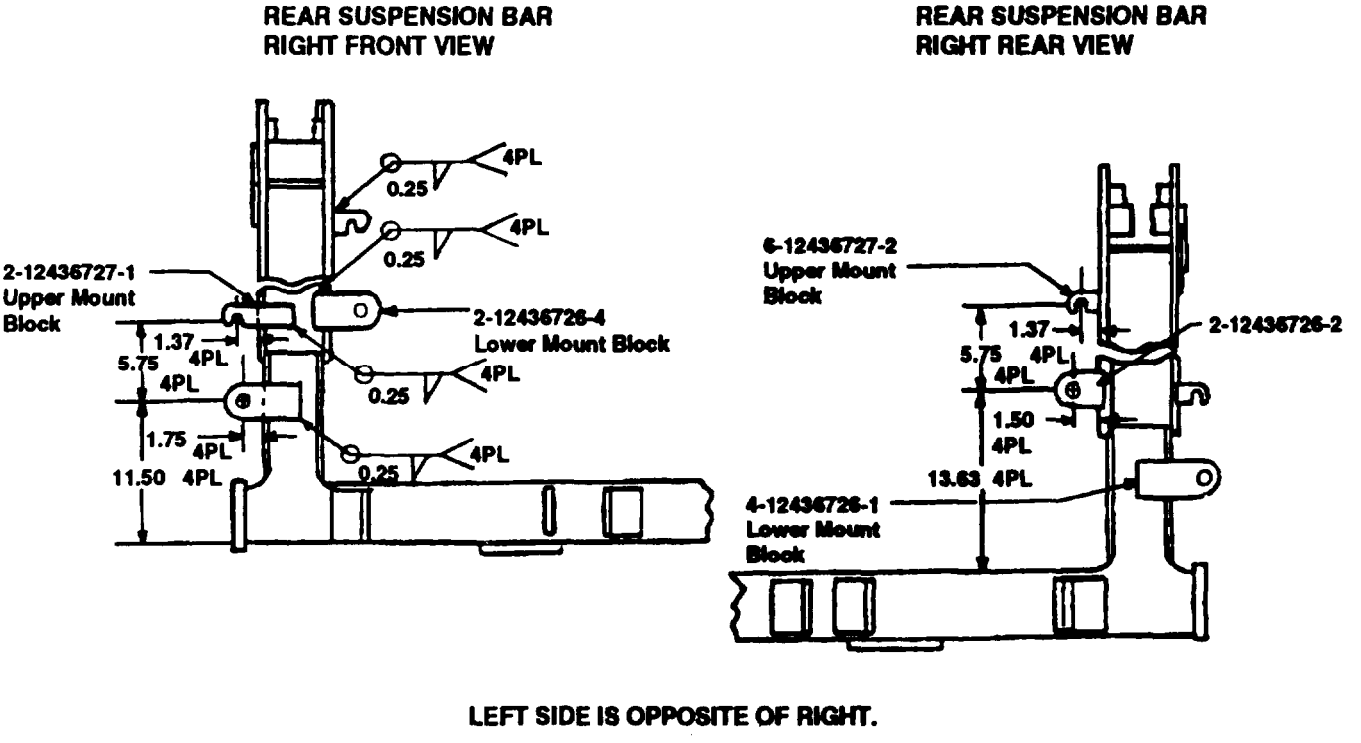

Figure G-4. Rear Shelter Suspension Bar.

Section II. MANUFACTURING INSTRUCTIONS (Con't)

Table G-3. Spacer Length.

Part Number	L (Length)	
	in.	mm
11649042-1	2.75 ± 0.02	69.65 ± 0.51 mm
11649042-2	2.94 ± 0.02	74.66 ±0.51 mm
11649042-3	7.12 ± 0.02	160.65 ± 0.51 mm
11649042-4	5.12 ± 0.02	130.05 ± 0.51 mm
11649042-5	1.31 ± 0.02	33.27 ± 0.51 mm

1. Make from aluminum pipe, 6063-T6, P/N M25995B3FC020, 1.315 in. (33.40 mm) outside diameter and 1.049 in. (26.64 mm) inside diameter in accordance with MIL-P-25995. Refer to Table G-3 for length.

2. Remove burrs and sharp edges.

3. Clean and treat in accordance with MIL-C-5541 or anodize in accordance with MIL-A-8625.

4. Prime paint in accordance with TT-P-666 or MIL-P-8585.

5. Paint with semigloss olive drab enamel in accordance with TT-E-529. Use color number X24087 in accordance with FED-STD-595.

6. Apply part number in accordance with MIL-STD-130.

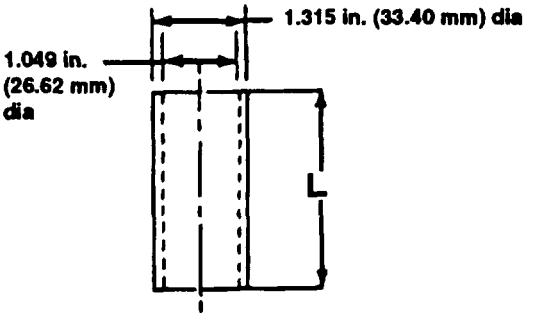

Figure G-5. Spacer.

Section IL MANUFACTURING INSTRUCTIONS (Con't)

1. Dimensions are shown in inches.

2. Tolerances are ± 0.02 in. for two-place decimals and 0.-010 in. for three-place decimals unless otherwise stated.

3. Angular tolerance is ± 1 degree.

4. Weld four P/N 12436726-1 and four P/N 12436727-1 to suspension bar per MIL-STD-1261, Class III, according to the specifications below.

5. Remove all burrs and sharp edges.

6. After welding, apply Chemical Agent Resistant Coating primer.

7. After primer dries (approximately six hours), apply Chemical Agent Resistant Coating camouflage basecoat, Green 383, color 34094.

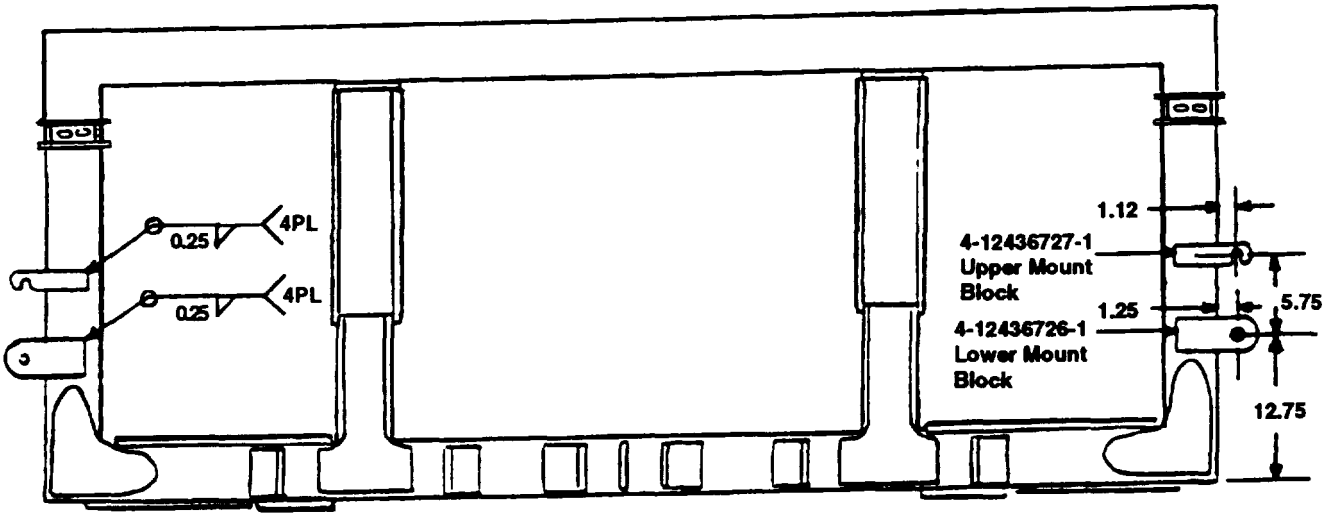

Figure G-S. Front Shelter Suspension Bar.

Section II. MANUFACTURING INSTRUCTIONS (Colt)

1. Make, from 0.030 in. (0.76 mm) aluminum alloy 5052-H32, P/N QQ-A-250/8.
2. Remove all burrs and sharp edges.
3. Apply guide, P/N 11649120, in accordance with MIL-STD-130.

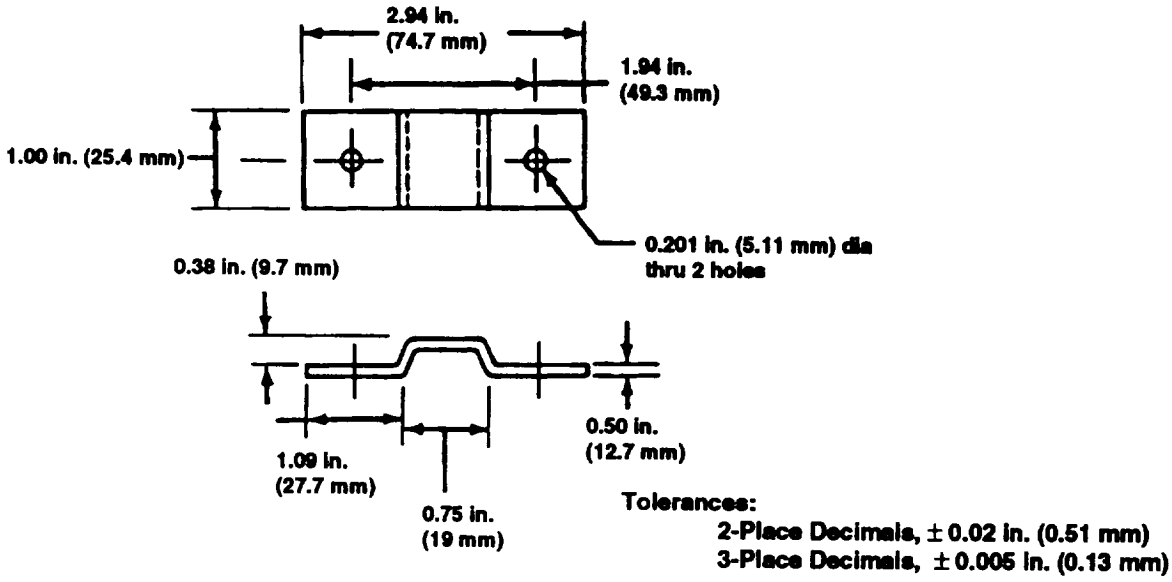

Figure G-7. Guide.

Section II. MANUFACTURING INSTRUCTIONS (Con't)

1. Dimensions are shown in inches.
2. Tolerances are ± 0.03 in. unless otherwise stated.
3. Make from light bracket, NSN 6220-01-038-8292, P/N 11682067.
4. Drill two holes, 11/32-in. diameter, according to the specifications below.
5. After drilling, apply Chemical Agent Resistant Coating primer to the bare metal surfaces.
6. After primer dries (approximately six hours), apply Chemical Agent Resistant Coating

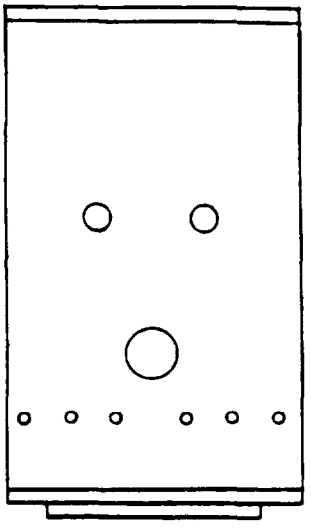

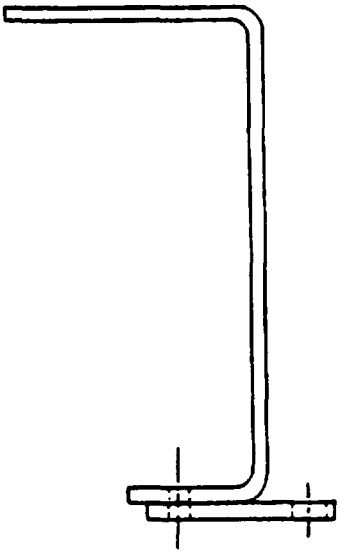

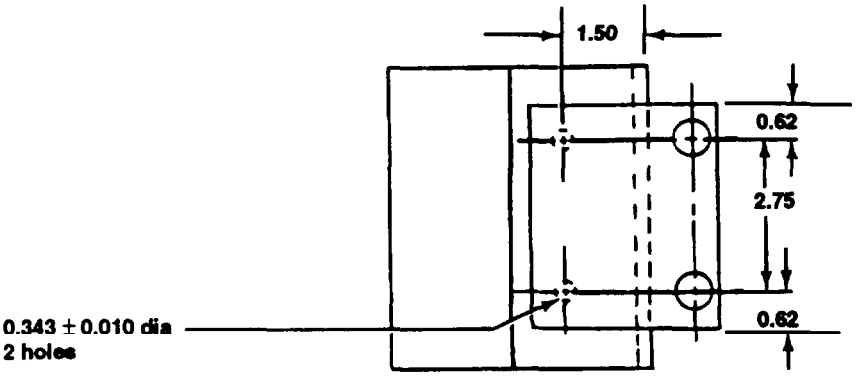

Figure G-8. Light Bracket.

Section II. MANUFACTURING INSTRUCTIONS (Con't)

1. Dimensions are shown in inches and centimeters.

2. Make from 0.375 in. metal bar, NSN 9510-00-168-1715, P/N ASTM A36, according to specifications in Table G-4 and Figure G-9.

3. Remove all burrs and sharp edges.

Table G4. Lower Mounting Block Length.

Part Number	Length (DIM A)	
	in. (± 0.03)	cm (± 0.08)
12436726-1	6.50	16.50
12436726-2	3.75	9.52
12436726-4	4.75	12.10

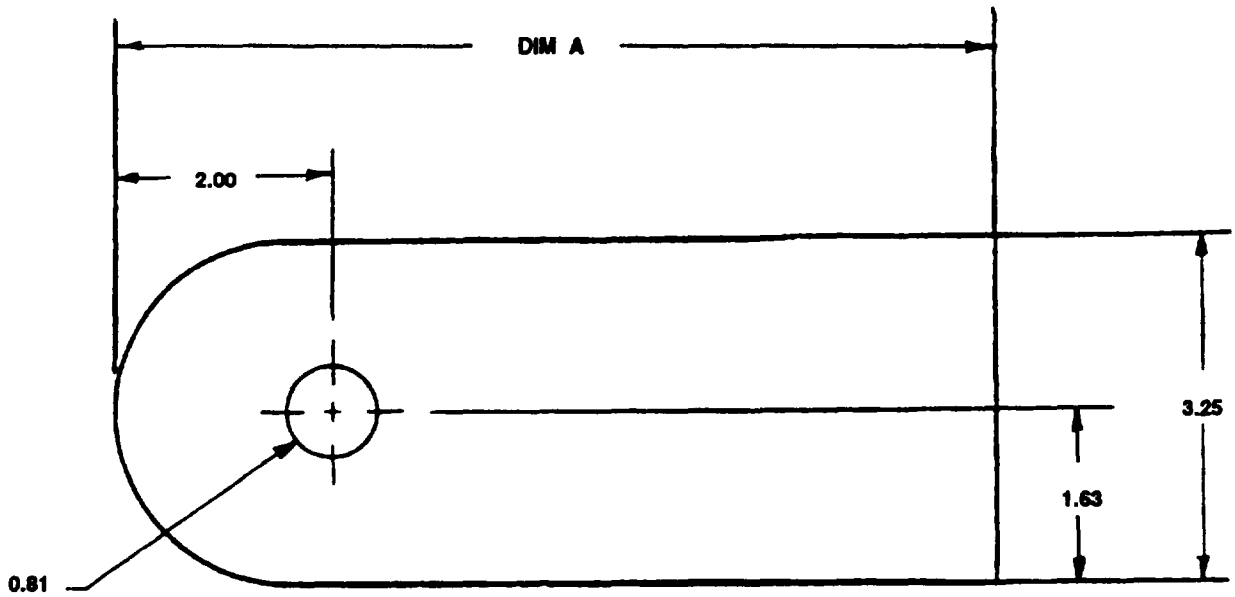

Figure G-9. Lower Mounting Block.

Section IL MANUFACTURING INSTRUCTIONS (Con't)

1. Dimensions are shown in inches and centimeters.

2. Make from 0.375 in. metal bar, NSN 9510-00-188-1715, P/N ASTM A36, according to specifications in Table G-5 and Figure G-10.

3. Remove all burrs and sharp edges.

Table G-6. Upper Mounting Block

Part Number	Length (DIM A)	
	in. (± 0.03)	cm (± 0.08)
12436727-1	5.87	14.92
12436727-2	2.87	7.30

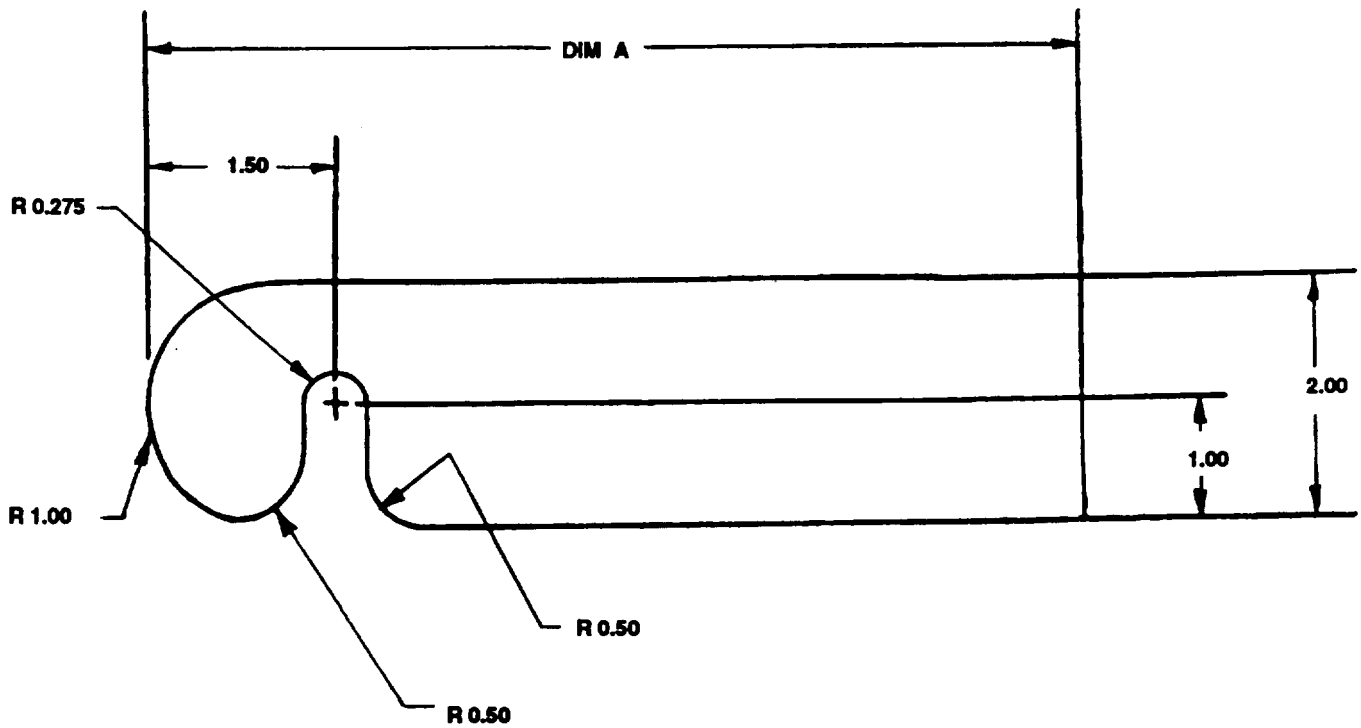

Figure G-10. Upper Mounting Block

Section II. MANUFACTURING INSTRUCTIONS (Con't)

Table G-6. Fabricated Steel Spacers.

Number Required	Length	
	in.	mm
1	1.00	2.5
1	2.00	5.1
1	3.00	7.6
1	4.00	10.2
6	5.00	12.2

1. Make from steel water pipe, NSN 4710-01-345-0963, P/N 6623652, 1.250 in. (3.175 mm) inside diameter. Cut various lengths, according to Table G-6.

2. Remove burrs and sharp edges.

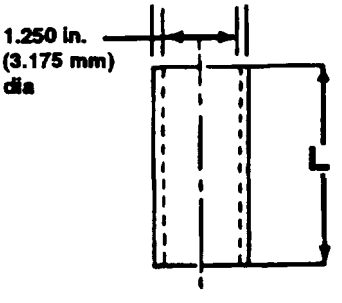

Figure G-11. Fabricated Steel Spacers.

APPENDIX H
TORQUE VALUES FOR THREADED FASTENERS

H-1. GENERAL

This section provides general torque limits for screws used on the vehicle. Special torque limits are indicated in the maintenance procedures for applicable components. The general torque limits given in this appendix will be used when specific torque limits are not indited in the maintenance procedure. These general torque limits cannot be applied to screws that retain rubber components; the rubber components will be damaged before the correct torque limit is reached.

H-2. TORQUE LIMITS.

Table H-1 (p.H-2) lists dry torque limits. Dry torque limits are used on screws that do not have lubricants applied to threads. Table H-2 (p.H-3) lists wet torque limits. Wet torque limits are used on screws that have high-pressure lubricants applied to threads.

H-3. HOW TO USE TORQUE TABLE.

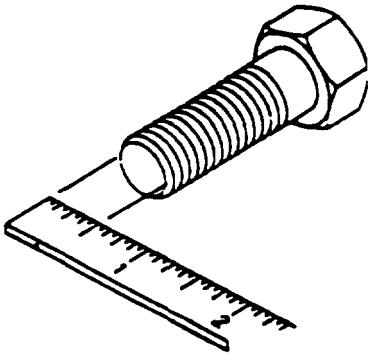

1. Measure the diameter of the screw to be installed.

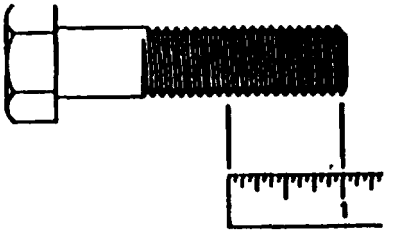

2. Count the number of threads per inch or use a pitch gage.

3. Under the heading SIZE, look down the left-hand column until the diameter of screw to be installed is found (there will usually be two lines beginning with the same size).

4. In the second column under SIZE, find the number of threads per inch that matches the number of threads counted in step 2.

H-3. HOW TO USE TORQUE TABLE (continued).

5. To find the grade of the screw that is to be installed, match the 'markings on the head to the correct picture of CAPSCREW HEAD MARKINGS on the table.

6. Look down the column under the picture found in step 5 until the torque limit in fed-pounds for the diameter and threads per inch of the screw being installed is found.

CAPSCREW HEAD MARKINGS

Manufacturers marks may vary.
These are all SAE Grade 5 (three lines),

Table H-1. Torque Limits for Dry Fasteners.

SAE CAPSCREW HEAD MARKINGS

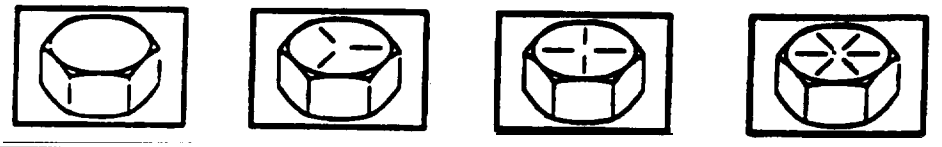

SIZE			TORQUE							
			SAE GRADE No. 1 or 2		SAE GRADE No. 5		SAE GRADE No. 6 or 7		SAE GRADE No. 8	
DIA. IN.	THREADS PER INCH	MM	FOOT-POUNDS	N•m	FOOT-POUNDS	N•m	FOOT-POUNDS	N•m	FOOT-POUNDS	N•m
1/4	20	6.35	5	6.78	8.00	10.85	10	13.56	12.00	16.27
1/4	28	6.35	6	8.14	10.00	13.56	–	–	14.00	18.98
5/16	18	7.94	11	14.92	17.00	23.05	19	25.76	24.00	32.52
5/16	24	7.94	13	17.63	19.00	25.76	–	–	27.00	36.61
3/8	16	9.53	18	24.41	31.00	42.04	34	46.10	44.00	59.66
3/8	24	9.53	20	27.12	35.00	47.46	–	–	49.00	66.44
7/16	14	11.11	28	37.97	49.00	66.44	55	74.58	70.00	94.92
7/16	20	–	30	40.68	55.00	74.58	–	–	78.00	105.77
1/2	13	12.70	39	52.88	75.00	101.70	85	115.26	105.00	142.38
1/2	20	–	41	55.60	85.00	115.26	–	–	120.00	162.78
9/16	12	14.29	51	69.16	110.00	149.16	120	162.72	155.00	210.18
9/16	18	–	55	74.58	120.00	162.72	–	–	170.00	230.52
5/8	11	15.88	63	85.43	150.00	203.40	167	226.45	210.00	284.76
5/8	18	–	95	128.82	170.00	230.52	–	–	240.00	325.44
3/4	10	19.05	105	142.38	270.00	366.12	280	379.68	375.00	508.50
3/4	16	–	115	155.94	295.00	400.02	–	–	420.00	596.52
7/8	9	22.23	160	216.96	305.00	535.62	440	596.64	605.00	820.38
7/8	14	–	175	237.30	435.00	589.86	–	–	675.00	915.30
1	8	25.40	235	318.66	590.00	800.04	660	894.96	910.00	1233.96
1	14	–	250	339.00	660.00	894.96	–	–	990.00	1342.44
1 1/8	–	25.58	–	–	800.00	1064.80	–	–	1280.00	1735.70
					880.00	1193.30			1440.00	1952.80
1 1/4	–	31.75	–	–	–	–	–	–	1820.00	2467.90
							–	–	2000.00	2712.00
1 3/8	–	34.93	–	–	1460.00	1979.80	–	–	2380.00	2337.30
					1680.00	2278.10			2720.00	3688.30
1 1/2	–	38.10	–	–	1940.00	2630.60	–	–	3160.00	4285.00
					2200.00	2983.20			3560.00	4827.40

H-3. HOW TO USE TORQUE TABLE (continued).

Table H-2. Torque Limits for Wet Fasteners.

SAE CAPSCREW HEAD MARKINGS

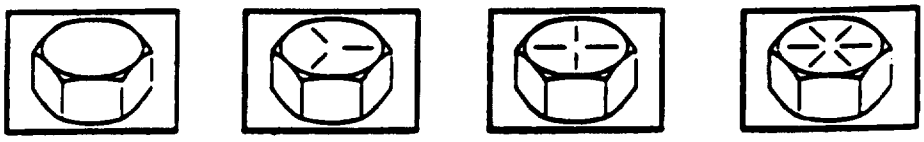

SIZE			TORQUE							
			SAE GRADE No. 1 or 2		SAE GRADE No. 5		SAE GRADE No. 6 or 7		SAE GRADE No. 8	
DIA. IN.	THREADS PER INCH	MM	FOOT-POUNDS	N•m	FOOT-POUNDS	N•m	FOOT-POUNDS	N•m	FOOT-POUNDS	N•m
1/4	20	6.35	4.90	6.10	7.20	9.76	9.00	12.20	10.80	14.64
1/4	28	6.35	5.40	7.33	9.00	12.20	–	–	12.60	17.08
5/16	18	7.94	9.90	13.34	15.30	22.54	17.10	23.18	21.60	29.27
5/16	24	7.94	11.70	15.87	17.10	23.18	–	–	24.30	32.95
3/8	16	9.53	16.20	21.97	27.90	37.84	30.60	41.49	39.60	53.69
3/8	24	9.53	18.00	24.41	31.50	42.71	–	–	44.10	59.80
7/16	14	11.11	25.20	34.17	44.10	59.80	49.50	67.12	63.00	85.42
7/16	20	–	27.00	36.61	49.50	67.12	–	–	70.20	95.19
1/2	13	12.70	35.10	47.59	67.50	91.53	76.50	103.73	94.50	128.14
1/2	20	–	36.90	50.04	76.50	103.73	–	–	108.00	146.50
9/16	12	14.29	45.90	62.24	99.00	134.24	108.00	146.45	139.50	189.16
9/16	18	–	49.50	67.12	108.00	146.45	–	–	153.00	207.47
5/8	11	15.88	56.70	76.89	135.00	183.06	150.30	203.80	189.00	256.28
5/8	18	–	85.50	1115.49	153.00	207.47	–	–	216.00	296.90
3/4	10	19.05	94.50	128.14	243.00	329.51	252.00	341.71	337.50	457.65
3/4	16	–	103.50	140.35	265.50	360.20	–	–	378.00	536.87
7/8	9	22.23	144.00	195.26	355.50	482.06	396.00	536.98	544.50	738.34
7/8	14	–	157.50	213.57	391.50	530.87	–	–	607.50	823.77
1	8	25.40	211.50	286.79	531.00	720.04	594.00	805.46	819.00	1110.56
1	14	–	225.00	305.10	594.00	805.46	–	–	891.00	1208.20
1 1/8	–	25.58	–	–	720.00	976.32	–	–	1152.00	1562.13
					792.00	1073.97			1296.00	1757.52
1 1/4	–	31.75	–	–	–	–	–	–		2221.11
										2440.80
1 3/8	–	34.93	–	–	1314.00	1781.82	–	–	2142.00	2904.57
					1512.00	2050.29			2448.00	3319.47
1 1/2	–	38.10	–	–	1746.00	2367.54	–	–	2844.00	3856.50
					1980.00	2684.88			3204.00	4344.66

H-4. TIGHTENING METAL FASTENERS.

When torquing a fastener, select a torque wrench whose range (Table H-3, p. H-4) fits the required torque value. A torque wrench is most accurate from 25 percent to 75 percent of its stated range. A torque wrench with a stated range of 0 to 100 will be most accurate from 25 to 75 foot-pounds. The accuracy of readings will decrease as you approach 0 foot-pounds or 100 foot-pounds. The ranges in Table H-3 are based on this principle.

H-4. TIGHTENING METAL FASTENERS (continued).

Table H-3. Torque Ranges.	
STATED RANGE	MOST EFFECTIVE RANGE
0 - 600 ft-lb	50 - 450 ft-lb
0 - 170 ft-lb	44 - 131 ft-lb
15 - 75 ft-lb	30 - 60 ft-lb

H-5. FASTENER SIZE AND THREAD PATTERN.

Threaded fasteners are categorized according to diameter of the fastener shank. Thread styles are divided into broad groups, the two most common being coarse (Unified Coarse-UNC) and fine (Unified Fine-UNF). These groups are defined by the number of threads per inch on the bolt shanks. In addition, threads are categorized by thread class (Table H-4), which is a measure of the degree between threads of bolt or screw (external threads) and threads of the attaching nut or tapped hole (internal threads) of the attaching nut or tapped hole (internal threads). The most common thread class for bolts and screws is Class 2.

Table H-4. Thread Classes and Description.		
EXTERNAL	INTERNAL	INTERNAL
1A	1B	LOOSE FIT
2A	2B	MEDIUM FIT
3A	3B	CLOSE FIT

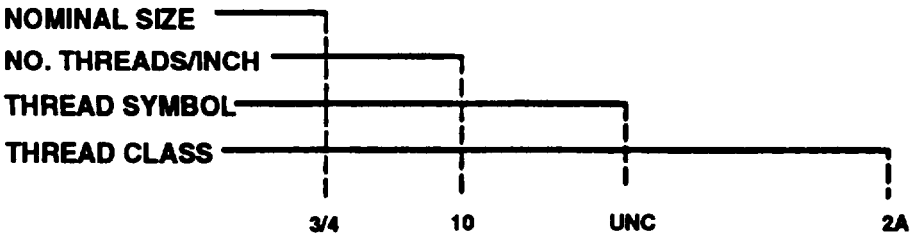

NOTE: Unless followed with -LH (e.g., 3/4-1 OUNC-2A-LH), threads are right-hand.

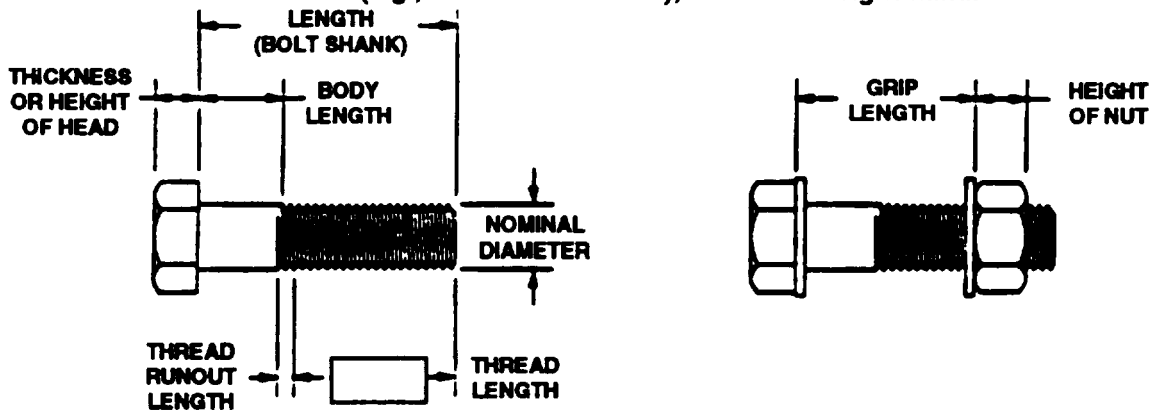

H-6. FASTENER GRADE.

In addition to being classified by thread type, thread fasteners are also classified by material. The most familiar fastener classification system is the SAE grading system (Table H-5).

Table H-5. SAE Screw and Bolt Markings

SCREWS	BOLTS
SAE GRADE 2 NO MARKINGS	SAE GRADE 6 4 RADIAL DASHES 90° APART
SAE GRADE 3 2 RADIAL DASHES 180° APART	SAE GRADE 7 5 RADIAL DASHES 72° APART
SAE GRADE 5 3 RADIAL DASHES 120° APART	SAE GRADE 8 6 RADIAL DASHES 60° APART

Markings on Hex Locknuts

GRADE A -No Marks
GRADE B -3 Marks
GRADE C-6 Marks

GRADE A -No Mark
GRADE B - Letter B
GRADE C- Letter C

GRADE A-No Notches
GRADE B - One Notch
GRADE C - Two Notches

APPENDIX I
WEAR LIMITS

Wear limits indicate that point to which a part or parts may be worn before replacement is necessary. Repair and overhaul points of measurement should be carefully checked using the proper instruments (i.e., inside or outside caliper or micrometer, depth gage, thread gage, dial indicator, or scale).

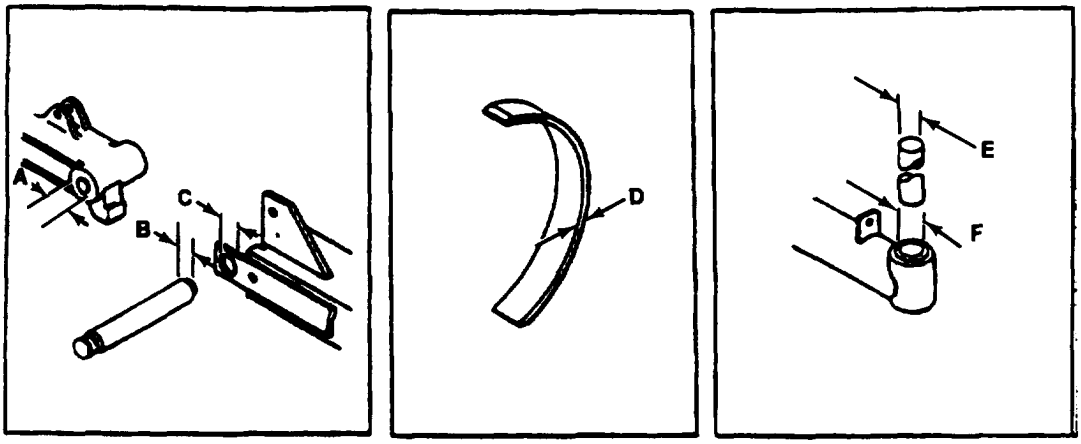

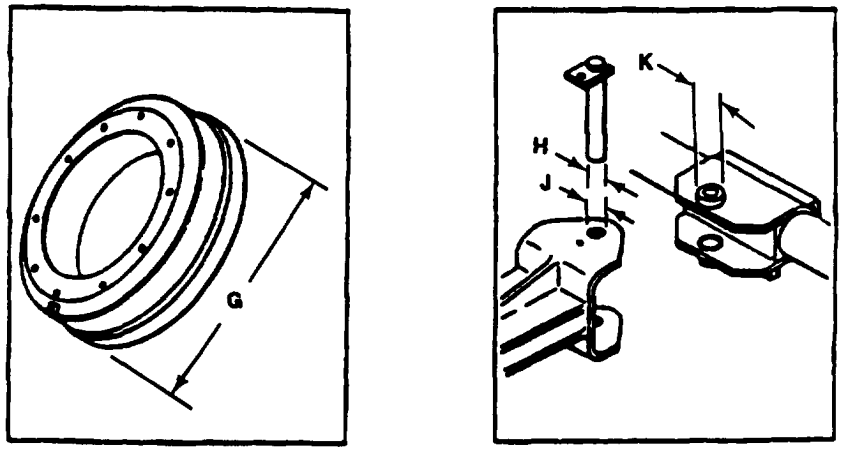

Item	Points of Measurement	Sizes of Fits of New Parts (in.)	Field Wear Limits (In.)
A	Inside diameter of steering casting bushing	1.000 to 1.003	0.0468 combine with B
B	Outside diameter of tow bar pivot pin	0.9960 to 0.9950	0.0468 combine with A 0.0625 combine with C
C	Inside diameter of tow bar pivot-pin hole	1-1/64	0.0625 combined with B
D	Thickness of brake lining	0.323 to 0.343	0.125 mininum
E	Outside diameter of kingpin	1.4340 to 1.4330	0.015 combined with F
F	Inside diameter of axle bushing	1.4365 to 1.4375	0.015 combined with E
G	Inside diameter of brake drum	14.995 to 15.005	15.085
H	Outside diameter of steering casting pivot pin	1.000 to 0.995	0.0312 combined with J or K
I	Inside diameter of steering casting pivot-pin hole	1.002 to 1.005	0.0312 combined with H
J	Inside diameter of axle bracket bushing	1.000 to 1.003	0.0312 combined with H

INDEX

Subject	Paragraph	Page
A		
Air Coupling	4-42	4-113
Air Cylinder	4-41	4-111
Air Hose	4-45	4-118
Air Reservoir	4-43	4-114
Air Spring	4-60	4-155
Alining Rod	4-65	4-174
Axle:		
Front	4-27	4-60
Rear		
M689	4-33	4-76
M832	4-34	4-78
M840	4-35	4-80
B		
Basic Issue Items	Section III	C-2
Bearings, Wheel	4-47	4-122
Binder (M840)	4-50	4-128
Blackout Stoplight (M689)	4-23	4-52
Block, Retaining (M689 and M832)	4-49	4-126
Bracket, Mounting:		
Front Axle	4-30	4-69
Front Axle, M832 (SN J089-001 thru 159 and J017-160 thru 350 Only)	4-69	4-185
Rear Axle, M832 (SN J089-001 thru 159 and J017-160 thru 350 Only)	4-68	4-181
Shock Absorber	4-61	4-157
Brakedrum:		
Repair	5-1	5-1
Replacement	4-47	4-122
Brake Lines and Fittings, Hydraulic	4-40	4-98
Brakeshoe	4-37	4-86
Branched Wiring Harness	4-25	4-56
C		
Cable, Handbrake	4-36	4-82
Caster Assembly:		
Repair, M832 (SN J089-001 thru 159 and J017-160 thru 350 Only)	4-70	4-188
Using and Storing, M832 (SN J089-001 thru 159 and J017-160 thru 350 Only)	2-10	2-8
Chains, Safety	4-30	4-69
Clamp, Coupling (M689 and M832)	4-49	4-126
Cleaning Instructions, General Maintenance	4-16	4-36
Cluster, Power	4-39	4-95
Cold, Operation in Extreme	2-22	2-53
Components:		
Major, Location and Description of	1-7	1-3
Of End item	Section II	C-2
Composite Stoplight-Taillight (M832 and M840)	4-24	4-54

INDEX

Subject	Paragraph	*Page*
C (Con't)		
Connecting Link	*4-28*	4-62
Controls and Indicators	*2-2*	2-1
Coupling:		
Dolly Set to Towing Vehicle, with Shelter	2-14	2-31
Front and Rear Dollies	2-19	2-45
Coupling, Air	4-42	4-113
Coupling Clamp (M689 and M832)	4-49	4-126
Cylinder		
Air	4-41	4-111
Hydraulic, M832 and M840	4-86	4-236
Wheel	4-38	4-92
D		
Data Plates:		
Location and Contents	1-8	1-6
Replacement	4-73	4-192
Destruction of Army Materiel To Prevent Enemy Use	1-3	1-1
Distribution Box:		
Front, M689 and MM	4-19	4-39
Rear, M689 and M840	4-20	4-42
Rear, M832	4-21	4-46
Dollies, Coupling Front and Rear	2-19	2-45
Dolly Set:		
Attaching to Shelter	2-11	2-9
Coupling to Towing Vehicle, with Shelter	2-14	2-31
Detaching from Shelter	2-18	2-40
Towing, Without Shelter	2-20	2-52
Towing, With Shelter	2-15	2-34
Uncoupling from Towing Vehicle, with Shelter	2-16	2-34
Drawbar, Adhesive Labels	4-74	4-194
Drawbar Assembly	4-54	4-142
Dusty Areas, Operation in	2-26	2-54
E		
End Item Components	Section II	C-2
Enemy Use, Destruction of Army Materiel to Prevent	1-3	1-1
Equipment:		
Care of, in Administrative Storage	4-91	*4-245*
Characteristics, Capabilities, and Features	1-6	1-2
Common Tools and	4-1	4-1
Preparation of, for Administrative Storage	4-90	4-243
Preparation of, for Shipment	4-94	4-246
Removal of, from Administrative Storage	4-93	4-246

INDEX

Subject	*Paragraph*	*Page*
E (Con't)		
Support Equipment	*4-2*	4-1
Equipment Data	1-10	1-14
Equipment Improvement Recommendations, Reporting	1-5	1-1
Expendable Supplies and Materials List	Section II	E-2
F		
Field Manuals	A-4	A-1
Fittings, Hydraulic:		
Brake Lines and	4-40	4-98
M832 (Except SN J089-001 thru 159 and J017-160 thru 350)	4-83	4-223
M832 (SN J089-001 thru 159 and J017-160 thru 350 Only)	4-84	4-228
M840	4-85	4-234
Fording	2-28	2-54
Forms	A-3	A-1
Front and Rear Dollies, Coupling	2-19	2-45
Front Axle	4-27	4-60
Front Distribution Box (M689 and M840	4-19	4-39
Front Stabilizer Bar (M832)	4-67	4-179
Front Suspension Bar (M832 SN J089-001 thru 159 and J017-160 thru 350 Only)	4-64	4-174
H		
Handbrake:		
Cable	4-36	4-82
Lever Adjustment	3-5	3-20
Lever Replacement	4-36	4-82
Heat, Operation in Extreme	2-23	2-53
Hoses, Hydraulic:		
M832 (Except SN J089-001 thru 159 and J017-160 thru 350)	4-83	4-223
M832 (SN J089-001 thru 159 and J017-160 thru 350 Only)	4-84	4-228
M840	4-85	4-234
Hub	4-47	4-122
Hydraulic Brake Lines and Fittings	4-40	4-98
Hydraulic Cylinder		
Boot Replacement, M832 (SN J089-001 thru 159 and J017-001 thru 160 Only)	4-87	4-241
M832 and M840	4-86	4-236
Hydraulic Fittings:		
M832 (Except SN J089-001 thru 159 and J017-160 thru 350)	4-83	4-223
M832 (SN J089-001 thru 159 and J017-160 thru 350 Only)	4-84	4-228
M840	4-85	4-234
Hydraulic Hoses:		
M832 (Except SN J089-001 thru 159 and J017-160 thru 350)	4-83	4-223
M832 (SN J089-001 thru 159 and J017-160 thru 350 Only)	4-84	4-228
M840	4-85	4-234

INDEX

Subject	Paragraph	Page
H (Con't)		
Hydraulic Pump:		
Instruction Plate	4-74	4-194
Overload Valve Adjustment		
M832 (Except SN J089-001 thru 159 and J017-160 thru 350)	4-77	4-204
M832 (SN J089-001 thru 159 and J017-160 thru 350 Only)	4-80	4-213
Repair		
M832 (Except SN J089-001 thru 159 and J017-160 thru 350)	4-76	4-200
M832 (SN J089-001 thru 159 and J017-160 thru 350 Only)	4-79	4-210
M840	4-82	4-218
Replacement		
M832 (Except SN J089-001 thru 159 and J017-160 thru 350)	4-75	4-196
M832 (SN J089-001 thru 159 and J017-160 thru 350 Only)	4-78	4-206
M840	4-81	4-216
I		
Indicators and Controls	2-2	2-1
Inspection Instructions, Service upon Receipt	4-5	4-2
J		
Jack, Lifting-leveling (M689):		
Repair	4-57	4-149
Replacement	4-56	4-148
K		
Knuckle, Steering	4-31	4-71
L		
Labels, Drawbar	4-74	4-194
Leakage Defintions	2-8	2-4
Lever:		
Handbrake, Adjustment	3-5	3-20
Handbrake, Replacement	4-36	4-82
Positioning, M840 and M832 (Except SN J089-001 thru 159 and J017-160 thru 350)	4-55	4-146
Lifting-leveling Jack (M689):		
Repair	4-57	4-149
Replacement	4-58	4-148

INDEX

Subject	Paragraph	Page
L (Con't)		
Lines and Fittings, Hydraulic Brake	4-40	4-98
Link Connecting	4-28	4-62
Location and Description of Major Components	1-7	1-3
Lubrication:		
chart		3-2
Instructions, Specific	3-2	3-1
M		
Maintenance Allocation Chart (MAC)	Section II	B-3
Maintenance Forms, Records, and Reports	1-2	**1-1**
Maintenance Functions	B-2	B-1
Major Components, Location and Description of	1-7	1-3
Manufacturing Instructions	Section II	G-3
Models, Differences Between	1-9	1-12
Mounting Bracket:		
Front Axle	4-30	4-69
Front Axle Yoke and, M832 (SN J089-001 thru 159 and J017-160 thru 350 Only)	4-69	4-185
Rear Axle Yoke and, M832 (SN J089-001 thru 159 and J017-160 thru 350 Only)	4-66	4-181
Shock Absorber	4-61	4-157
Mud, Operation in	2-24	2-53
0		
Operator/Crew		
Preventive Maintenance Checks and Services (PMCS)	Table 2-1	2-5
General	2-6	2-3
Specific	2-7	2-4
Troubleshooting Fault Symptom Index	3-4	3-6
Troubleshooting, General Information	3-3	3-5
P		
Plates, Data:		
Location and Contents	1-8	1-6
Replacement	4-73	4-192
Platform:		
M832 (Except SN J089-001 thru 159 and J017-160 thru 350)	4-52	4-134
M832 (SN JO89-001 thru 159 and J017-160 thru 350 Only)	4-53	4-136
Positioning Lever, M840 and M832 (Except SN J089-001 thru 159 and J017-160 thru 350)	4-55	4-148
Power Cluster	4-39	4-95

INDEX

Subject	*Paragraph*	*Page*
P (Con't)		
Preventive Maintenance Checks and Services (PMCS):		
General, Operator/Crew	2-6	2-3
General, Unit	4-10	4-3
Operator/Crew	Table 2-1	2-5
Specific, Operator/Crew	2-7	2-4
Specific, Unit	4-11	4-4
Unit	Table 4-1	4-4
Publication Index	A-2	A-1
Pump, Hydraulic:		
Instruction Plate	4-74	4-000
Overload Valve Adjustment		
M832 (Except SN J089-001 thru 159 and J017-160 thru 350)	4-77	4-204
M832 (SN J089-001 thru 159 and J017-160 thru 350 Only)	4-80	4-213
Repair		
M832 (Except SN J089-001 thru 159 and J017-160 thru 350)	4-76	4-200
M832 (SN J0189-001 thru 159 and J017-160 thru 350 Only)	4-79	4-210
M840	4-82	4-218
Replacement		
M832 (Except SN J089-001 thru 150 and J017-160 thru 350)	4-75	4-196
M832 (SN J089-001 thru 150 and J017-160 thru 350 Only)	4-78	4-206
M840	4-81	4-216
R		
Rear Axle:		
M689	4-33	4-76
M832	4-34	4-78
M840	4-35	4-80
Rear Axle Yoke and Mounting Bracket	4-68	4-181
Rear Distribution Box:		
M689 and M840	4-20	4-42
M832	4-21	4-46
Rear Stabilizer Bar (M832)	4-66	4-177
Rear Suspension Bar	4-63	4-161
Reflector	4-72	4-191
Relay Valve	4-44	4-116
Repair Instructions, General Maintenance	4-18	4-38
Repair Paris	4-3	4-1
Repairs, Reporting	2-5	2-3
	4-9	4-3
Reservoir, Air	4-43	4-114
Retaining Block (M689 and M832)	4-49	4-126
Rod, Alining	4-65	4-174

INDEX

Subjecf	Paragraph	Page
S		
Safety Chains	4-40	4-69
Saltwater Areas, Operation in	2-25	2-54
Sandy Areas, operation in	2-26	2-54
Service Intervals	2-4	2-3
	4-8	4-3
Service upon Receipt:		
Inspection Instructions	4-5	4-2
Servicing Instructions	4-6	4-2
Shelter		
Attaching Dolly Set	2-11	2-9
Detaching Dolly Set	2-18	2-40
Leveling	2-13	2-30
Lifting	2-12	2-27
Lowering	2-17	2-36
Shipment, Preparation of Equipment for	4-94	4-246
Shock Absorber	4-61	4-157
Shroud	4-30	4-69
Snow, Operation in	2-27	2-54
Spring, Air	4-60	4-155
Stabilizer Bar (M832):		
Front	4-67	4-171
Rear	4-66	4-177
Steering Knuckle	4-31	4-71
Steering Stop Adjustment (M832 SN J089-001 thru 159 and J017-150 thru 350 Only)	4-71	4-190
Step Plate (M840)	4-51	4-130
Stoplight, Blackout (M689)	4-23	4-52
Stoplight-taillight:		
Composite, M832 and M840	4-24	4-54
M689	4-22	4-50
Storage, Administrative:		
Care of Equipment in	4-91	4-245
Definition of	4-89	4-243
General Information	4-88	4-243
Preparation of Common Components for	4-92	4-245
Preparation of Equipment for	4-90	4-243
Removal of Equipment from	4-93	4-246
strut:		
M832	4-58	4-151
M840	4-59	4-153
Suspension Bar:		
Except M832 (SN J089-001 thru 159 and J017-160 thru 350)	4-62	4-159
Front, M832 (SN J089-001 thru 150 and J017-160 thru 350)	4-64	4-167
Rear, M832 (SN J089-001 thru 159 and J017-160 thru 350 Only)	4-63	4-161

INDEX

Subject	Paragraph	Page
T		
Technic-al Bulletins	A-5	A-1
Technical Manuals	A-6	A-2
Test Equipment Requirements	Section III	B-9
Test, Measurement, and Diagnostic Equipment (TMDE)	4-2	4-1
Tie-rod	4-29	4-66
Tire and Tube Maintenance	4-48	4-125
Toolbox:		
M832 (Except SN J089-001 thru 159 and J017-160 thru 350)	*4-52*	4-134
M832 (SN J089-001 thru 159 and J017-160 thru 350 Only)	*4-53*	4-136
M840	*4-51*	4-130
Tools:		
Common, Equipment and	4-1	4-1
Special	4-2	4-1
Tool and Test Equipment Requirements	Section III	B-9
Torque Values for Threaded Fasteners:		
Fastener Grade	H-6	H-5
Fastener Size and Thread Pattern	H-5	H-4
Tightening Metal Fasteners	H-4	H-3
Torque Limits	H-2	H-1
Torque Limits for Dry Fasteners	Table H-1	H-2
Torque Limits for Wet Fasteners	Table H-2	H-3
Torque Table, How To Use	H-3	H-1
Towing Dolly Set:		
Without Shelter	2-20	2-52
With Shelter	2-15	2-34
Troubleshooting:		
Chart, Operator/Crew	Table 3-1	*3-7*
Chart, Unit	Table 4-1	*4-9*
Fault Symptom Index, Operator/Crew	3-4	*3-8*
Fault Symptom Index, Unit	4-13	*4-8*
Operator/Crew, General Information	3-3	3-5
Unit, General Information	4-12	4-7
U		
Uncoupling Dolly Set with Shelter from Towing Vehicle	2-16	2-34
Unit:		
Preventive Maintenance Checks and Semites (PMCS)	Table 4-1	4-4
General	4-10	4-3
Specific	4-11	4-4
Troubleshooting Chart	Table 4-1	4-9
Troubleshooting Fault Symptom Index	4-13	4-8
Troubleshooting, General Information	4-12	4-7

INDEX

Subject	*Paragraph*	*Page*
V		
Valve, Relay	*4-44*	*4-116*
W		
Warning Summer		
Wheel:		
Alinement	4-32	4-75
Bearings	4-47	4-122
Cylinder	4-38	4-92
Replacement	4-46	4-120
Wiring Diagram	4-26	4-58
Wiring Harness, Branched	4-25	4-56
Work Safety	4-15	4-38
Y		
Yoke:		
Front Axle, M832 (SN J089-001 thru 159 and J017-160 thru 350 Only)	*4-69*	*4-185*
Rear Axle, M832 (SN J089-001 thru 159 and J017-160thru 350 Only)	*4-68*	*4-181*

By Order of the Secretary of the Army:

GORDON R. SULLIVAN
General, United States Army
Chief of Staff

Official:

MILTON H. HAMILTON
Administrative Assistant to the
Secretary of the Army
06722

By Order of the Secretary of the Air Force:

MERRILL A. MCPEAK
General, United States Air Force
Chief of Staff

Official:

RONALD W. YATES
General, United States Air Force
Commander AFMC

Distribution:

To be distributed IAW DA Form 12-39-E (Block No. 0524) requirements for (U.S. Army) TM 9-2330-275-14&P

o U.S . GOVERNMENT PRINTING OFFICE: 1994-546-017/00095

RECOMMENDED CHANGES TO EQUIPMENT TECHNICAL PUBLICATIONS

THEN. . JOT DOWN THE DOPE ABOUT IT ON THIS FORM, CAREFULLY TEAR IT OUT, FOLD IT AND DROP IT IN THE MAIL!

SOMETHING WRONG WITH THIS PUBLICATION?

FROM: (PRINT YOUR UNIT'S COMPLETE ADDRESS)
COB 1st BN 2d BDE
Ft. Hood, TX 76544

DATE SENT: 25 January 1994

PUBLICATION NUMBER	PUBLICATION DATE	PUBLICATION TITLE
TM 9-2330-275-14&P	X X X	Opr's, Unit, DS/GS Maintenance Manual Including RPSTL for Dolly Set, Lift, Transportable Shelter Model Series 689, 832, 840

BE EXACT. PIN-POINT WHERE IT IS

PAGE NO	PARA-GRAPH	FIGURE NO	TABLE NO
4-75	4-58		

IN THIS SPACE TELL WHAT IS WRONG AND WHAT SHOULD BE DONE ABOUT IT:

In the removal, item 12 is called a lockwasher and item 13 is called a nut. Item 12 should be the nut and item 13 should be the lockwasher.

SAMPLE

PRINTED NAME, GRADE OR TITLE, AND TELEPHONE NUMBER: John Doe Sp4 639-0639

SIGN HERE: John Doe

DA FORM 1 JUL 79 2028-2

PREVIOUS EDITIONS ARE OBSOLETE.

P.S.--IF YOUR OUTFIT WANTS TO KNOW ABOUT YOUR RECOMMENDATION MAKE A CARBON COPY OF THIS AND GIVE IT TO YOUR HEADQUARTERS.

REVERSE OF DA FORM 2028-2

FILL IN YOUR UNIT'S ADDRESS

FOLD BACK

DEPARTMENT OF THE ARMY

COB 1st BN 2d BDE

Ft. Hood, TX 76544

TEAR ALONG PERFORATED LINE

Commander
US Army Tank-Automotive Command
ATTN: AMSTA-MB
Warren, Michigan 48397-5000

SAMPLE

RECOMMENDED CHANGES TO EQUIPMENT TECHNICAL PUBLICATIONS

THEN. . JOT DOWN THE DOPE ABOUT IT ON THIS FORM, CAREFULLY TEAR IT OUT, FOLD IT AND DROP IT IN THE MAIL!

SOMETHING WRONG WITH THIS PUBLICATION?

FROM: (PRINT YOUR UNIT'S COMPLETE ADDRESS)

DATE SENT

PUBLICATION NUMBER	PUBLICATION DATE	PUBLICATION TITLE
TM 9-2330-275-14&P	15 March 1994	Opr's, Unit, DS/GS Maintenance Manual Including RPSTL for Dolly Set, Lift, Transportable Shelter Model Series 689, 832, 840

BE EXACT. PIN-POINT WHERE IT IS

PAGE NO	PARA-GRAPH	FIGURE NO	TABLE NO

IN THIS SPACE TELL WHAT IS WRONG AND WHAT SHOULD BE DONE ABOUT IT:

PRINTED NAME, GRADE OR TITLE, AND TELEPHONE NUMBER

SIGN HERE

DA FORM 1 JUL 79 2028-2

PREVIOUS EDITIONS ARE OBSOLETE.

P.S.--IF YOUR OUTFIT WANTS TO KNOW ABOUT YOUR RECOMMENDATION MAKE A CARBON COPY OF THIS AND GIVE IT TO YOUR HEADQUARTERS.

REVERSE OF DA FORM 2028-2

FILL IN YOUR UNIT'S ADDRESS

FOLD BACK

DEPARTMENT OF THE ARMY

Commander
US Army Tank-Automotive Command
ATTN: AMSTA-MB
Warren, Michigan 48397-5000

TEAR ALONG PERFORATED LINE

RECOMMENDED CHANGES TO EQUIPMENT TECHNICAL PUBLICATIONS

SOMETHING WRONG WITH THIS PUBLICATION?

FROM: (PRINT YOUR UNIT'S COMPLETE ADDRESS)

DATE SENT

PUBLICATION NUMBER	PUBLICATION DATE	PUBLICATION TITLE
TM 9-2330-275-14&P	15 March 1994	Opr's, Unit, DS/GS Maintenance Manual Including RPSTL for Dolly Set, Lift, Transportable Shelter Model Series 689, 832, 840

BE EXACT. PIN-POINT WHERE IT IS

PAGE NO	PARA-GRAPH	FIGURE NO	TABLE NO

IN THIS SPACE TELL WHAT IS WRONG AND WHAT SHOULD BE DONE ABOUT IT:

PRINTED NAME, GRADE OR TITLE, AND TELEPHONE NUMBER

SIGN HERE

DA FORM 1 JUL 79 2028-2

PREVIOUS EDITIONS ARE OBSOLETE.

P.S.--IF YOUR OUTFIT WANTS TO KNOW ABOUT YOUR RECOMMENDATION MAKE A CARBON COPY OF THIS AND GIVE IT TO YOUR HEADQUARTERS.

REVERSE OF DA FORM 2028-2

FILL IN YOUR UNIT'S ADDRESS

FOLD BACK

DEPARTMENT OF THE ARMY

TEAR ALONG PERFORATED LINE

Commander
US Army Tank-Automotive Command
ATTN: AMSTA-MB
Warren, Michigan 48397-5000

RECOMMENDED CHANGES TO EQUIPMENT TECHNICAL PUBLICATIONS

SOMETHING WRONG WITH THIS PUBLICATION?

FROM: (PRINT YOUR UNIT'S COMPLETE ADDRESS)

DATE SENT

PUBLICATION NUMBER	PUBLICATION DATE	PUBLICATION TITLE
TM 9-2330-275-14&P	15 March 1994	Opr's, Unit, DS/GS Maintenance Manual Including RPSTL for Dolly Set, Lift, Transportable Shelter Model Series 689, 832, 840

BE EXACT. PIN-POINT WHERE IT IS

PAGE NO	PARA-GRAPH	FIGURE NO	TABLE NO

IN THIS SPACE TELL WHAT IS WRONG AND WHAT SHOULD BE DONE ABOUT IT:

PRINTED NAME, GRADE OR TITLE, AND TELEPHONE NUMBER

SIGN HERE

DA FORM 1 JUL 79 2028-2

PREVIOUS EDITIONS ARE OBSOLETE.

P.S.--IF YOUR OUTFIT WANTS TO KNOW ABOUT YOUR RECOMMENDATION MAKE A CARBON COPY OF THIS AND GIVE IT TO YOUR HEADQUARTERS.

REVERSE OF DA FORM 2028-2

FILL IN YOUR UNIT'S ADDRESS

FOLD BACK

DEPARTMENT OF THE ARMY

TEAR ALONG PERFORATED LINE

Commander
US Army Tank-Automotive Command
ATTN: AMSTA-MB
Warren, Michigan 48397-5000

THE METRIC SYSTEM AND EQUIVALENTS

LINEAR MEASURE

1 Centimeter =10 Millimters = 0.01 Meters = 0. 3937 Inches
1 Meter = 100 Centimeters = 1000 Millimeters=39. 37 Inches
1 Kilometer =1000 Meters = 0.621 Miles

HEIGHTS

1 Gram = 0.001 Kilograms = 1000 Milligrams=(J .035 Ounces
1 Kilogram = 1000 Grams = 2.2 Lb
1 Metric Ton = 1000 Kiloqrams = 1 Meqagram = 1.1 Short Tons

LIQUID MEASURE

1 Milliliter = 0.001 Liters = 0.0338 Fluid Ounces
1 Liter = 1000 Milliliters=33.82 Fluid Ounces

SQUARE MEASURE

1 Sq Centimeter = 100 Sq Millimeters = 0.155 Sq Inches
1 Sq Meter = 10,000 Sq Centimeters=10.76 Sq Feet
1 Sq Kilometer = 1,000,000 Sq Meters = 0.0386 Sq Miles

CUBIC MEASURE

1 Cu Centimeter = 1000 Cu Millimeters = 0.06 Cu Inches
1 Cu Meter = 1,000,000 Cu Centimeters = 35.31 Cu Feet

TEMPERATURE

5/9 (°F - 32) = °C
212° Fahrenheit is equivalent to 100° Celsius
90° Fahrenheit is equivalent to 32.2° Celsius
32° Fahrenheit is equivalent to 0° Celsius
9/5 C° + 32 = F°

APPROXIMATE CONVERSION FACTORS

TO CHANGE	TO	MULTIPLY BY
Inches	Centimeters	2.540
Feet	Meters	0-305
Yards	Meters	0.914
Miles	Kilometers	1.609
Square Inches	Square Centimeters	6.451
Square Feet	Square Meters	0.093
Square Yards	Square Meters	0.836
Square Miles	Square Kilometers	2.590
Acres	Square Hectometers	0.405
Cubic Feet	Cubic Meters	0.028
Cubic	Cubic Meters	0.765
Fluid Ounces	Milliliters	29.573
Pints	Liters	0.473
Quarts	Liters	0.946
Gallons	Liter s....'	3.785
Ounces	Grams	28. 349
Pounds	Kilograms	0.454
Short Tons	Metric Tons	10.907
Pound-Feet	Newton-Meters	1.356
Pounds per Square Inch	Kilopascals	6.895
Miles per Gallon	Kilometers per Liter	0.425
Miles per Hour	Kilometers per Hour	1.609

TO CHANGE	TO	MULTIPLY BY
Centimeter s	Inches	0.394
Meters	Feet	3.280
Nester s	Yards	1.094
Kilometers	Miles	0.621
Square Centimeters	Square Inches	0.155
Square Meters	Square Feet	10.764
Square Meters	Square Yards	1.196
Square Kilometers	Square Miles	0.386
Square Hectometers	Acres	2.471
Cubic Meters	Cubic Feet	35.315
Cubic Meters	Cubic Yards	1.308
Milliliters	Fluid Ounces	0,034
Liters	Pints,	2. '113
Liters	Quarts	1.057
Liters	Gallons	0.264
Grams	Ounces	0.035
Kilograms,	Pounds	2.205
Metric Tons	Short Tons	1.102
Newton-Meters	pound-Feet	0.738
Kilopascals	Pounds per Square Inch	0.145
Kilometers per Liter	Miles per Gallon	2.354
Kilometers per Hour	Miles per Hour	0.621

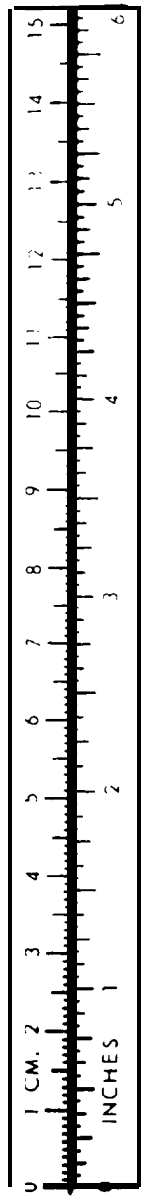

(FOR REFERENCE ONLY)

TA089991

PIN: 045618-000